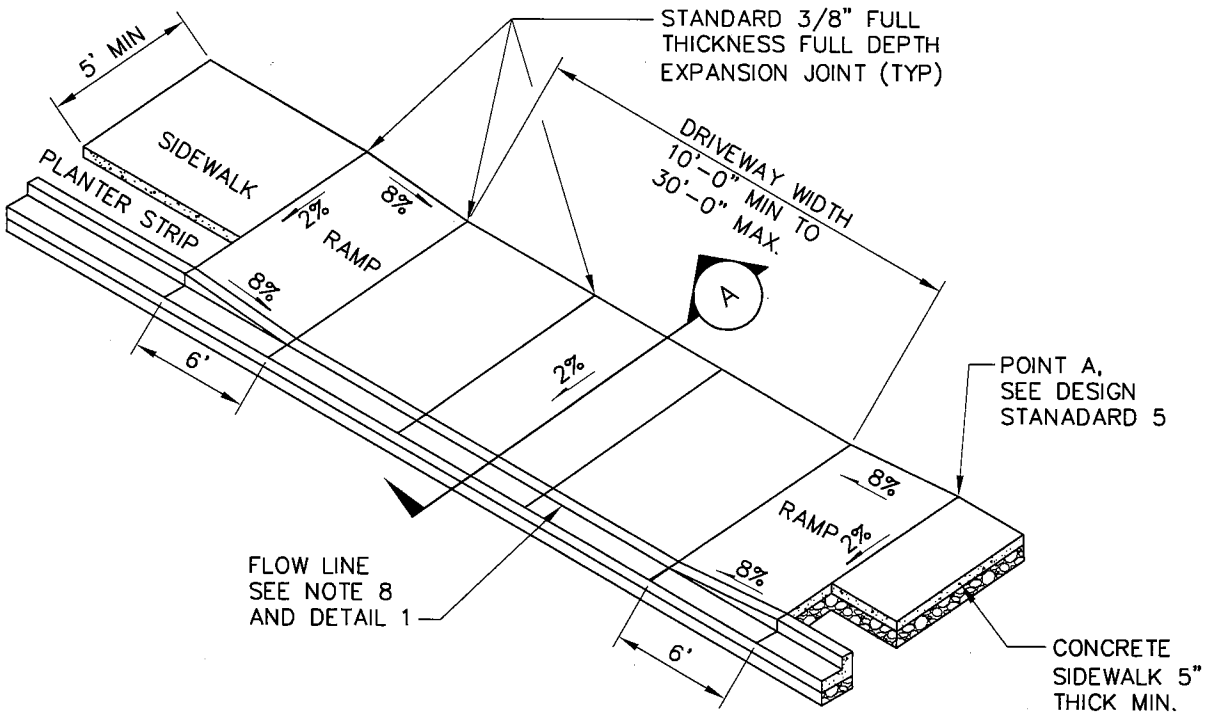

DRIVEWAY APPROACH DETAIL

NOTES

1. ALL JOINTS SHALL BE CLEANED AND EDGED.
2. SEE SECTION 4.01 FOR SURFACING REQUIREMENTS
3. CONCRETE PAVEMENT SHALL BE BRUSHED TRANSVERSELY WITH A FIBER OR WIRE BRUSH OF A TYPE APPROVED BY THE ENGINEER.
4. 3/8" THRU EXPANSION JOINTS SHALL BE PLACED AT BACK, SIDES AND FRONT. MAXIMUM EXPANSION JOINT SPACING IS 14' CENTER TO CENTER.
5. SEE SECTION 3.01 FOR ADDITIONAL DRIVEWAY REQUIREMENTS.

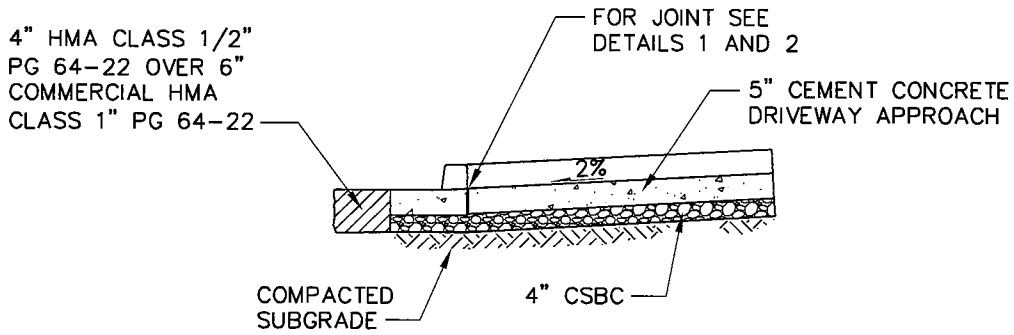

SECTION A-A

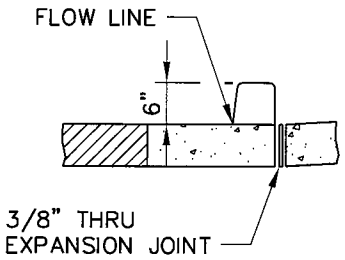

DETAIL 1 (VERTICAL CURB)

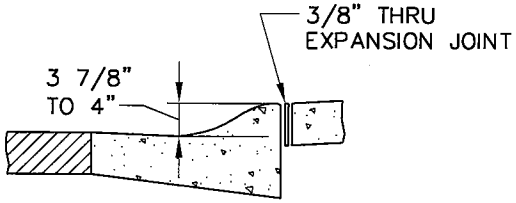

DETAIL 2 (ROLLED CURB)

RESIDENTIAL DRIVEWAY APPROACH (URBAN)

FIG. 3-004

King County
Department of Transportation
Road Services Division
2007 Design and Construction Standards