South Park Bridge Replacement
Volume 1: Preliminary Design Report

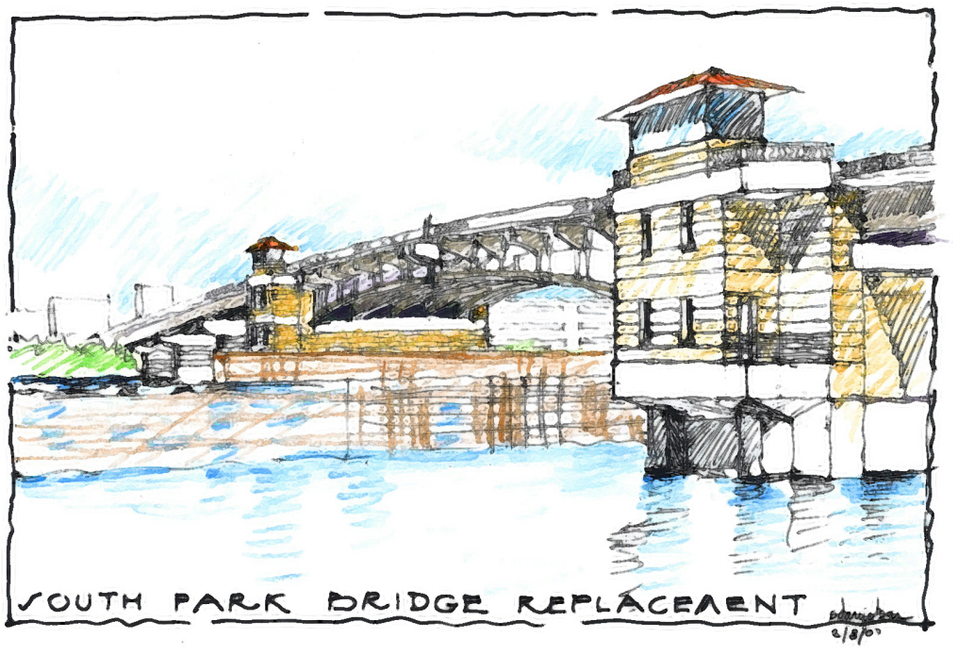

Prepared for: King County

Prepared by: **PB Americas, Inc.**
Shannon & Wilson, Inc.
Stafford Bandlow Engineering, Inc.
Lin and Associates, Inc.

August 2007

SOUTH PARK BRIDGE REPLACEMENT
PRELIMINARY DESIGN REPORT

Prepared for:

King County

Prepared by:

PB AMERICAS INC.

Shannon & Wilson, Inc.

Stafford Bandlow Engineering, Inc.

Lin & Associates, Inc.

August 2007

Table of Contents

Volume 1

1.0 EXECUTIVE SUMMARY 1
2.0 INTRODUCTION 4
2.1 Project Location and Limits 4
2.1.1 Location 4
2.1.2 Limits 4
2.2 Purpose of the Project 7
2.3 Previous Studies 7
3.0 EXISTING CONDITIONS 9
3.1 Existing Roadway 9
3.1.1 Functional Classification 9
3.1.2 Existing Roadway Section 9
3.2 Existing Bridge 9
3.2.1 Span Layout and Structural Types 9
3.2.2 Existing Condition and Deficiencies 12
3.2.3 Rehabilitation History 15
3.3 Soil Conditions 15
3.4 Existing Utilities 15
4.0 PROPOSED BRIDGE REPLACEMENT 17
4.1 Proposed Alignment and Profile 18
4.1.1 Alignment 18
4.1.2 Profile 18
4.2 Project Datum 18
4.3 Impervious Area 19
4.4 Drainage 20
4.5 Proposed Typical Section 22
4.5.1 Roadway Sections 22
4.5.2 Bridge Sections 22
4.6 ADA Compliance 22
4.7 Bridge Span Layout 22
4.8 Navigation Channel Clearance 23
4.8.1 Horizontal Clearance 23
4.8.2 Vertical Clearance 23
4.9 Structural Type Selection 23
4.9.1 The Main Span 23
4.9.2 The Approach Spans 24
5.0 DESIGN CRITERIA AND SPECIFICATIONS 25
5.1 Design Specifications and Guidelines 25
5.2 Seismic Design Criteria: Major Design Codes 25
5.2.1 Seismic Demand 26
5.2.2 Seismic Capacity: Performance Criteria and Structural Capacity 29
5.2.3 Site Specific Response Spectra 31
5.3 The Project Specific Design Criteria 33

6.0 FOUNDATIONS AND GROUND IMPROVEMENTS 34
6.1 Ground Improvements 34
6.2 Bascule Pier Foundations 34
6.2.1 Deep Foundation Selection 35
6.2.2 Footing Size and Layout 38
6.3 Approach Span Foundations 39
7.0 BASCULE PIERS 40
7.1 Pier Layout 40
7.1.1 Bottom of Pier Elevation 40
7.1.2 Maintenance Access 40
7.1.3 Seismic Induced Shear Forces on Trunnion Bearing 41
7.2 Fixed Deck on Bascule Pier 41
7.3 Control Houses 41
7.4 Structural Layout Effects from the Span Drive System 41
7.4.1 Span Drive Layout Options 42
7.4.2 Span Drive Selection 43
8.0 BASCULE SPAN 44
8.1 Bascule Geometry and Configuration 44
8.1.1 Bascule Leaves 44
8.1.2 Structure Type and Layout Study of the Bascule Span 44
8.1.3 Seismic Analysis 45
8.1.4 Bascule Leaf Layout 48
8.1.5 Buffer Cylinder Locations 48
8.1.6 Trunnion Girders and Support Layout 49
8.2 Rack and Pinion Gears 52
8.3 Bascule Span Deck 53
8.3.1 Deck System 53
8.3.2 Deck Drainage 54
9.0 APPROACH SPANS 55
9.1 Superstructure 55
9.2 Substructure and Foundations 55
10.0 MECHANICAL AND ELECTRICAL SYSTEM 56
10.1 Mechanical System 56
10.1.1 Bascule Span Drive Machinery 56
10.1.2 Span Support System 57
10.1.3 Bascule Span Center Locks 60
10.2 Electrical Control System 61
10.2.1 Electrical Power Systems 61
10.2.2 Control System 62
10.2.3 Main Motor Drives 62
11.0 PIER PROTECTION 63
11.1 Geometric Constraints 63
11.2 Fender Design 63
12.0 CONSTRUCTION 66
12.1 Construction Overview 66
12.2 Construction Constraints 66

12.2.1 Environmental Constraints 66
12.2.2 Site Constraints 69
12.3 Environmental Controls 69
12.3.1 Temporary Erosion and Sedimentation Controls 69
12.3.2 Spill Prevention, Control, and Countermeasures Plan 69
12.3.3 Erosion and Sedimentation Control Features 70
12.3.4 Stormwater Treatment Facilities 71
12.4 Construction Sequence and Details 72
12.4.1 General Project Timing, Sequence, and Traffic Impact 72
12.4.2 Ground Improvements 72
12.4.3 Utility Relocation 74
12.4.4 Construction of Working Trestles 74
12.4.5 Construction of New Main Piers 75
12.4.6 Approach Span Piers and Abutments 78
12.4.7 Bridge Girders and Decks 78
12.4.8 Removal of Cofferdam and Temporary Construction Trestle 79
12.4.9 Partial Pier Protection 79
12.4.10 Shoreline Improvements 79
12.4.11 Submarine Cable Connection 79
12.4.12 Construction of Approaches and Roadway Work 80
12.4.13 Removal of Existing Bridge 80
13.0 AESTHETIC CONSIDERATIONS 82
14.0 REFERENCES 84

List of Appendices

Appendix A: Structural Design Criteria

Appendix B: Navigation Clearance Letter

Appendix C: Site-Specific Response Spectra

Appendix D: Drive System Layout Options

Appendix E: Construction Schedule

Appendix F: Bascule Bridge Parametric Study

Appendix G: Drainage Data

Appendix H: Civil Engineering Design

Volume 2

South Park Moveable Bridge Replacement: Preliminary Design Plans

Volume 3

South Park Moveable Bridge Replacement: Geotechnical Report & Supplement

Volume 4

South Park Moveable Bridge Replacement: Calculation Book I

Volume 5

South Park Moveable Bridge Replacement: Calculation Book II

Volume 6

South Park Moveable Bridge Replacement: Calculation Book III

List of Acronyms

AASHTO.... American Association of State Highway and Transportation Officials
a.c. ..... alternating current
ACM ..... asbestos containing material
ADA..... Americans with Disabilities Act of 1990
ADT ..... Average Daily Traffic
ANSI..... American National Standards Institute
AGMA..... American Gear Manufacturers Association
ARP ..... Average Return Period
BMPs..... best management practices
BDM ..... Bridge Design Manual
CESCL ..... Construction Erosion and Sediment Control Lead
CSO ..... combined sewer outflow
dBA ..... A-weighted decibels
d.c. ..... direct current
DEIS..... Draft Environmental Impact Statement
DNR ..... King County Department of Natural Resources
DOE ..... Washington State Department of Ecology
DWT ..... Dead Weight Ton
EPA ..... United States Environmental Protection Agency
ESA ..... Endangered Species Act
FHWA..... Federal Highway Administration, United States Department of Transportation (USDOT)
ft^2 ..... square feet
I-5 ..... Interstate 5
IBC ..... International Building Code
IEEE ..... Institute of Electrical and Electronic Engineers
IEC ..... International Electrotechnical Comission
I/O ..... Input/Output
Hz ..... hertz
KCDOT..... King County Department of Transportation
KCSWDM . King County Surface Water Design Manual

LBP ..... lead-based paint
LDW ..... Lower Duwamish Waterway
LRFD ..... Loan and Resistance Factor Design
MCC ..... Motor Control Center
MCE ..... Maximum Credible Earthquake
MCEER ..... Multidisciplinary Center for Earthquake Engineering Research
MHW ..... mean high water
MLLW ..... mean lower low-water
mph ..... miles per hour
MSE ..... Mechanically Stabilized Earth
MUTCD ..... Manual on Uniform Traffic Control Devices
NAVD88 .... North American Vertical Datum 1988
NBIS ..... National Bridge Inspection Standards
NEPA ..... National Environmental Policy Act
NFPA..... National Fire Protection Association
NMFS ..... National Marine Fisheries Service
NOAA ..... National Oceanic & Atmospheric Association
NRHP ..... National Register of Historic Places
OSHA ..... United States Occupational Safety and Health Administration
PAH ..... Polycyclic Aromatic Hydrocarbons
PCB ..... Polychlorinated Biphenyls
PGA..... peak ground acceleration
PGIS..... pollutant-generating impervious surface
PLC ..... Programmable Logic Controller
RC ..... Reinforced Concrete
SVOC ..... Semi-Volatile Organic Compounds
SCR..... Silicone Rectifier
SDOT ..... Seattle Department of Transportation
SMS ..... Sediment Management Standards
SPCC ..... Spill Prevention Control and Countermeasures
SR-509 ..... State Route 509
SR-99 ..... State Route 99
TESC..... Temporary Erosion and Sediment Control

TDML..... Total Daily Maximum Load
USACE..... United States Army Corps of Engineers
USCG..... United States Coast Guard
USDOT..... United States Department of Transportation
USFWS ..... United States Fish and Wildlife Service
VOC ..... Volatile Organic Compounds
WDFW..... Washington Department of Fish and Wildlife
WSDOT..... Washington State Department of Transportation

EXECUTIVE SUMMARY

SOUTH PARK BRIDGE REPLACEMENT PRELIMINARY DESIGN REPORT

1.0 Executive Summary

The purpose of this document is to describe the assumptions, project background, design considerations, and objectives of the preliminary design for the new South Park Movable Bridge. It will replace the existing bridge crossing the Duwamish Waterway along 14th/16th Avenue S. in South Seattle, which is reaching the end of its useful life. The following topics are described and/or discussed in this document:

- Purpose of this project
- Existing bridge and site conditions
- Previous studies related to this project
- Proposed new bridge alignment and profile
- Proposed new bridge span layout and structure type selection
- Proposed bascule pier footing layout and design
- Review of seismic design standards and methodology
- Geotechnical issues and the need for ground improvement
- Proposed construction method, schedule, and constraints
- Aesthetic considerations related to this project

King County selected a double-leaf bascule bridge to replace the existing structure from design alternatives presented in the Draft Environmental Impact Statement[10]. The main considerations that govern the design for the project are safety, environmental impact, function, aesthetics and impact to the South Park businesses and neighborhood. The bridge type selection was based on collective input from all stakeholders, including the South Park Community, the Seattle Department of Transportation (SDOT), the Washington State Department of Transportation (WSDOT), and King County.

Structurally, seismic design and constructability were the two major challenges encountered during the preliminary design of this bascule bridge. The massive bascule structure and the liquefiable soil under the bridge both contribute to large seismic forces arising during an earthquake. A two-level seismic design strategy has been used to address anticipated changes by AASHTO regarding state-of-the art seismic design. Due to the importance of maintaining both road and river traffic, as well as the large capital investment in a bascule bridge, it is essential that the bridge remains operable after a seismic event with a 108-year return period. The bridge is designed for no-collapse during a 975-year earthquake event.

The recommended structure is a low-level bascule bridge with two approach span structures of approximately 306 feet each and a double leaf bascule span of 227 feet between trunnions. The vertical clearance in the closed position will be 34 feet from the Mean High Water level to the bottom of the bascule truss, in accordance with U.S. Coast Guard regulations, and the channel width will be 125 feet between the fenders.

The proposed bascule lift span will consist of steel trusses operated by a leaf drive system with mechanical load sharing. The span drive machinery is located between the bascule trusses and terminates with a rack and pinion at each bascule truss. Load sharing between the two rack pinions for each leaf is provided by a primary differential reducer. Two electric motors, alternated at a predetermined frequency, provide power to operate each leaf.

It is recommended that the bascule pier footings be supported on sixteen, 8-foot-diameter drilled shafts embedded well into the deep glacial soils, where the tip elevation is -150+/- feet NAVD88. Each of the proposed approach structures consists of two spans with an intermediate pier on drilled shafts. Each span has a cast-in-place slab supported by WSDOT WF74G prestressed girders.

PRELIMINARY DESIGN REPORT

2.0 Introduction

2.1 Project Location and Limits

2.1.1 Location

The existing South Park Bridge is approximately four miles south of downtown Seattle in Washington State (see Figure 01). This bridge crosses the Duwamish Waterway and comprises a section of a roadway named 14th/16th Avenue S. between East Marginal Way S. and S. Cloverdale Street.

2.1.2 Limits

The project area begins approximately at the intersection of S. Cloverdale Street and 14th Avenue S. and ends approximately at the intersection of East Marginal Way S. and 16th Avenue S. The project area encompasses three local government jurisdictions: the City of Seattle, the City of Tukwila, and King County (see Figure 02). The area north of the Duwamish Waterway (between East Marginal Way S. and the waterway) lies within the city limits of both the City of Seattle (northern portion) and the City of Tukwila (southern portion). The project area south of the Duwamish Waterway lies within unincorporated King County and the City of Seattle. The two-block area between the riverbank and Dallas Avenue S. is in King County. The blocks south of Dallas Avenue South on 14th Avenue South are all in the City of Seattle.

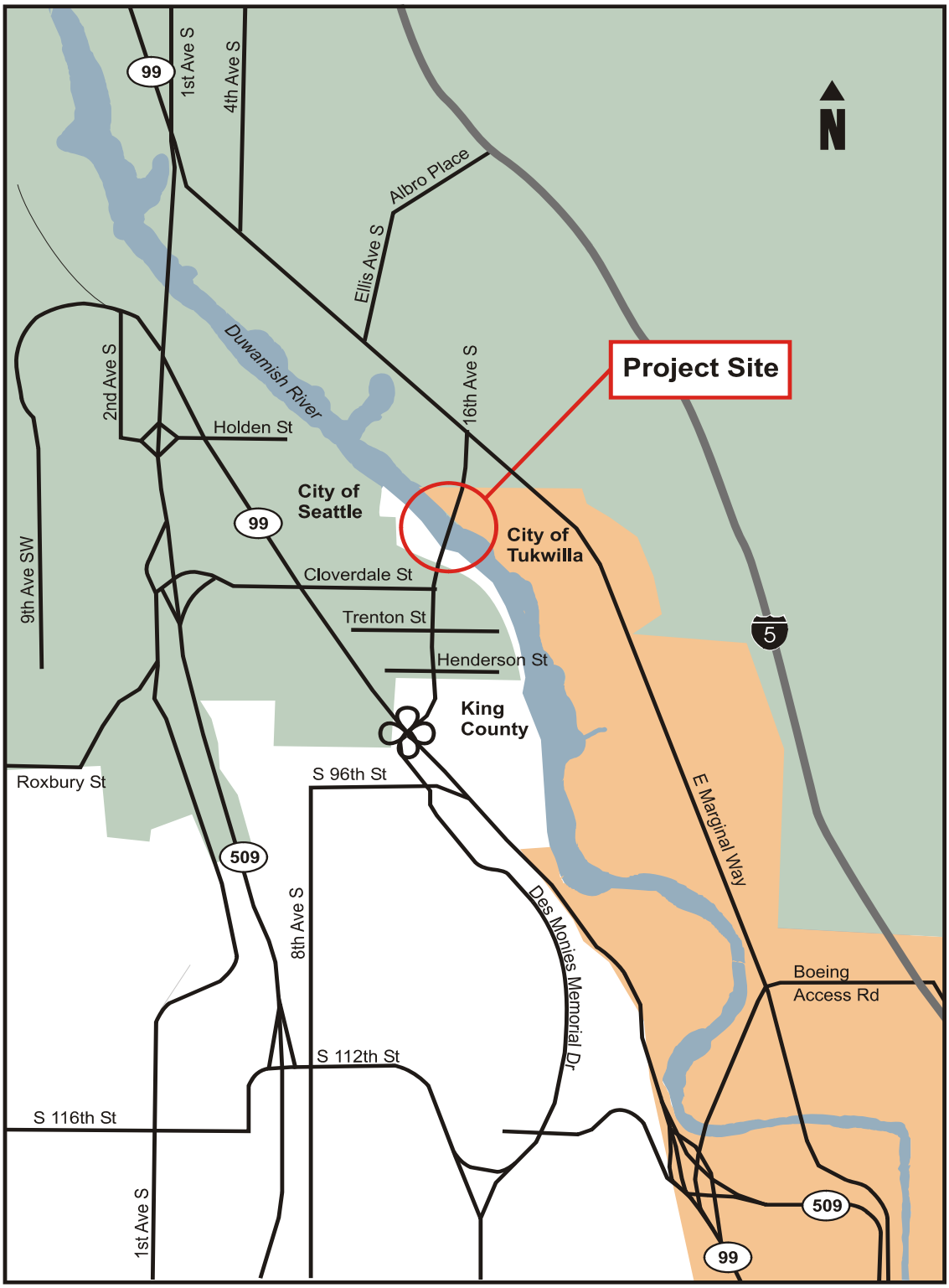

Figure 01
Project Area and Vicinity Map

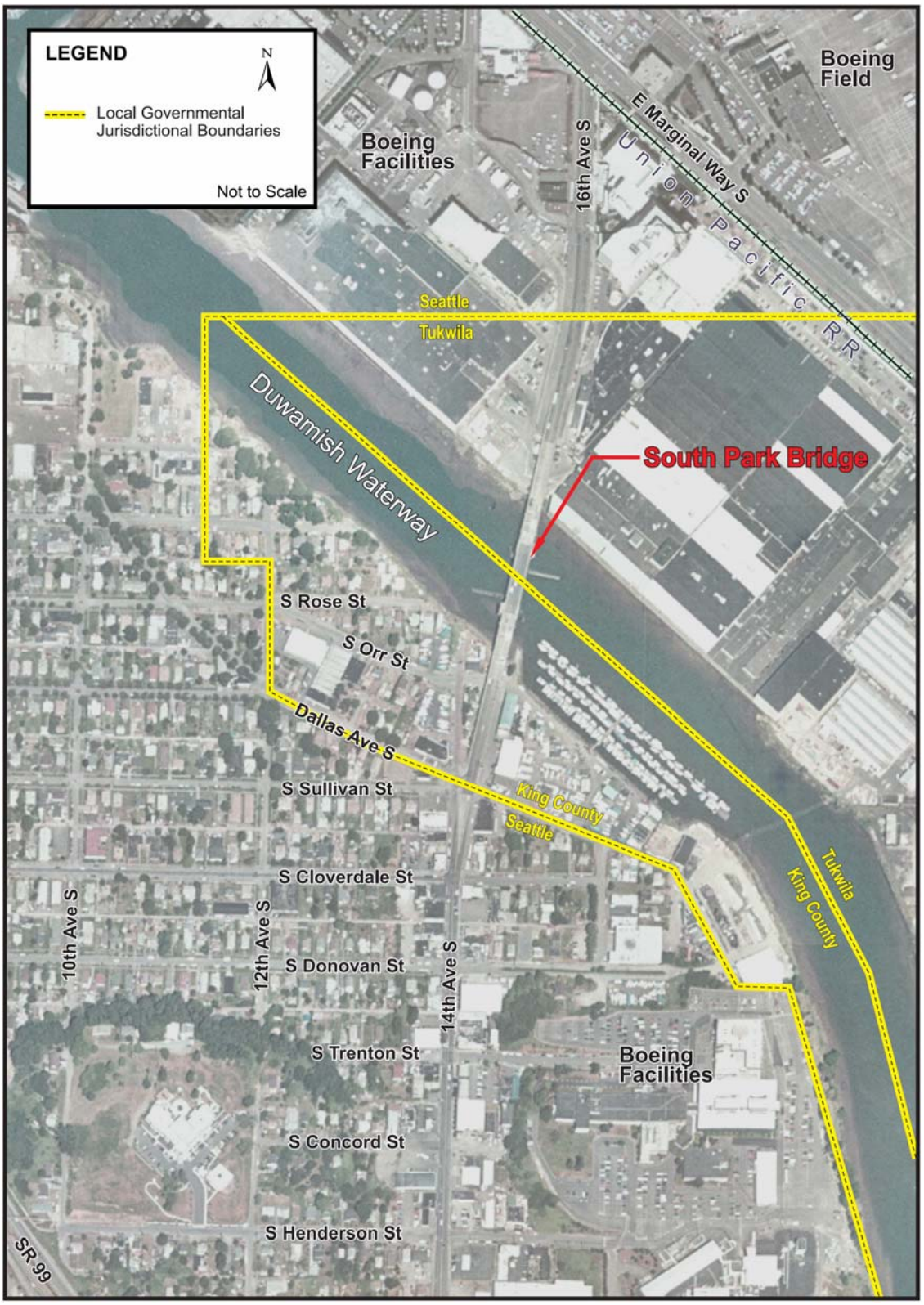

Figure 02
Project Area Street Map

2.2 Purpose of the Project

The purpose of the proposed bascule bridge replacement is to provide a safe facility for the public, maintain and improve the existing waterway while minimizing environmental impacts, and to correct structural and functional deficiencies associated with the existing bridge. The project is based on the preferred alternative selected following the Draft Environmental Impact Statement[10] (DEIS) and the design will address the issues identified in the Final Environmental Impact Statement.

2.3 Previous Studies

A number of previous studies have been conducted on the rehabilitation/retrofit and/or replacement of the existing South Park Bridge. Listed below are some of the major reports from previous studies or inspections:

1) *[WSBIS] Bridge Inspection Reports / Agency King County / South Park Bridge, most recent report is from July, 2006.*
2) *South Park Bridge Peer Review,* KPFF, February, 2006.
3) *South Park Bridge Project, Draft Environmental Impact Statement and Section 4(f) Evaluation,* King County Department of Transportation, September, 2005.
4) *Underwater Inspection of Bridge SID No. 08433700, 14th Avenue South over the Duwamish Waterway,* Han-Padron Associates, June 2001 and May, 2005.
5) *Geotechnical Report Phase II: South Park Bridge Project, Shannon & Wilson, Inc., March, 2004.*
6) *South Park Bridge Project Structural Alternative Study,* Parsons Brinckerhoff, Inc., November, 2003.
7) *South Park Bridge Rehabilitation Feasibility Study, Technical Memorandum,* Parsons Brinckerhoff, Inc., May, 2003.
8) *South Park Bridge Project, Summary Technical Report: Alternatives Development and Screening,* Parsons Brinckerhoff, Inc., September, 2002.
9) *South Park Bridge No. 3179: Ongoing Bascule Pier Foundation Monitoring,* prepared for the King County Department of Transportation and the City of Tukwila by Jim Wells, Engineer, King County Bridge and Structures Unit, February, 2002.
10) *Final Report: Seismic Study of 14th Avenue South Bridge*, Imbsen and Associates, Inc., August, 2001.
11) *Report of Post-Event Underwater Inspection,* Han-Padron Associates, March, 2001.

12) *South Park Bridge: Earthquake Damage Summary 2-28-01, document and map of damage by Tim Lane, King County Bridge Maintenance Engineer, March, 2001.*

13) *Seismic Vulnerability Assessment of 14th/16th Avenue South Bridge,* EQE International, Inc., February, 1998.

14) *Underwater Inspection Report for 14th/16th Avenue South Bridge,* Echelon Engineering, Inc., November, 1997.

15) *14th/16th Avenue South Bridge-Epoxy Crack Injection, Bidding Solicitation and General Conditions, Technical Specifications, Contract Drawings, Addenda*, King County Department of Transportation Roads Division Bridge Unit, March, 1997.

16) *Findings and Fact Decision – 14th Avenue South Bridge Historical and Landmark Status,* King County Landmarks and Heritage Commission, Decision made December 19, 1996, and filed January, 1997.

17) *14th/16th Avenue South Bridge Rehabilitation/Replacement Design Report,* Sverdrup Corporation, November, 1994.

18) *Sixteenth Avenue South Bridge Concrete Condition Survey, Boss & Mayes Testing Engineers, Inc.,* November, 1994.

19) *16th Avenue South Bridge: Substructure Investigation, Testing and Assessment of Bascule Piers,* Echelon Engineering, Inc., September, 1994.

20) *Liquefaction Evaluation: 16th Avenue South Bridge Approaches, Seattle, Washington,* Shannon & Wilson, Inc. Geotechnical and Environmental Consultants, August, 1994.

21) *14th /16th Avenue South Bridge Foundation Design Report North Pier,* Sverdrup Corporation, October, 1991.

22) *Geotechnical Report: 16th Avenue South Bridge Seattle, Washington, Shannon & Wilson, Inc., September, 1991.*

Items 1 through 5 above are the most recent studies prior to this preliminary engineering phase. After careful evaluation of these recent report findings, input from the South Park Community, and consent from the Cities of Seattle and Tukwila, WSDOT, and the Federal Highways Administration (FHWA), King County has selected the option to replace the existing bridge with a new movable bridge as the preferred alternative. The County has chosen to move this alternative forward to the preliminary design phase.

3.0 Existing Conditions

3.1 Existing Roadway

3.1.1 Functional Classification

This section of 14th/16th Avenue South is part of a regional major arterial linking key travel routes in the South Seattle and southwest King County areas through the South Park community to the Duwamish manufacturing and industrial center and downtown Seattle. The bridge and 14th/16th Avenue S. connect East Marginal Way S. to the north and SR 99 to the south of the South Park community. This roadway is designated as a truck route by King County and carries a higher than average 13% truck traffic. This roadway is currently classified as a Major Arterial. The posted speed on the existing bridge is 30 mph.

3.1.2 Existing Roadway Section

The existing roadway section has two northbound lanes, two southbound lanes, and sidewalks on both sides. The existing roadway does not meet current design standards because the width of the lanes is too narrow at 9½ feet resulting in an overall bridge width of 52 feet including sidewalks.

3.2 Existing Bridge

3.2.1 Span Layout and Structural Types

The existing South Park Bridge (formerly called the 16th Avenue South Bridge) is a double-leaf bascule bridge constructed over the Duwamish Waterway between 1929 and 1931. The existing movable span is a Scherzer Rolling Lift double-leaf bascule span and it operates, on average, three to five times per day. Because it is the only operational example of a Scherzer Rolling Lift bascule bridge in the state of Washington, the bridge is listed on the National Register of Historic Places[6] (see Photo 01). The overall length of the bridge is 1,045 feet. The double-leaf bascule movable span has a center-to-center distance between the front bearings of 190 feet. The approach spans are symmetrical on each side of the main span. Twelve concrete spans totaling approximately 240 feet lead up to a two-span steel truss approach of approximately 87 feet and 79 feet in length. The existing bridge deck consists of a four-lane, 40-foot-wide roadway with 5-foot sidewalks on each side. The bridge deck width is substandard according to current design specifications (see the existing bridge drawing, Figure 04). The existing open grid bridge deck is of concern due to its effects on water quality in the Duwamish Waterway and traffic safety.

The bridge spans the navigable channel of the Duwamish Waterway, which is used for industrial, commercial, and recreational purposes. Presently, the bridge typically operates according to the existing U.S. Coast Guard bridge

operation permit, which specifies that the center of the movable span must have 34 feet of vertical clearance at the Mean High Water (MHW) level when the bridge is closed. The navigable horizontal clearance is 118 feet at the waterline between the pier protection structures and narrows to approximately 92 feet between the opposing tips of the two open movable leaves at approximately 114 feet above MHW. Figures 04 and 05 are the two drawings supplied by King County for the U.S. Coast Guard permit on September 8, 1998. The U.S. Coast Guard has accepted these drawings as a legitimate revision of the permit drawings for the original approval document of 1929[5]. The clearances shown in figures 04 and 05 were also permitted by the Army Corps of Engineers.

Photo 01
Existing South Park Bridge

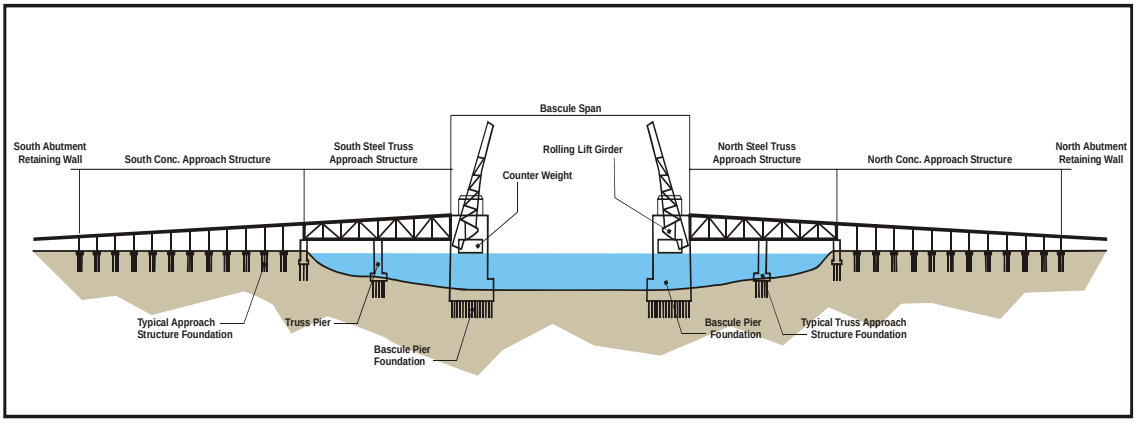

Figure 03
Existing South Park Bridge, Built in 1931

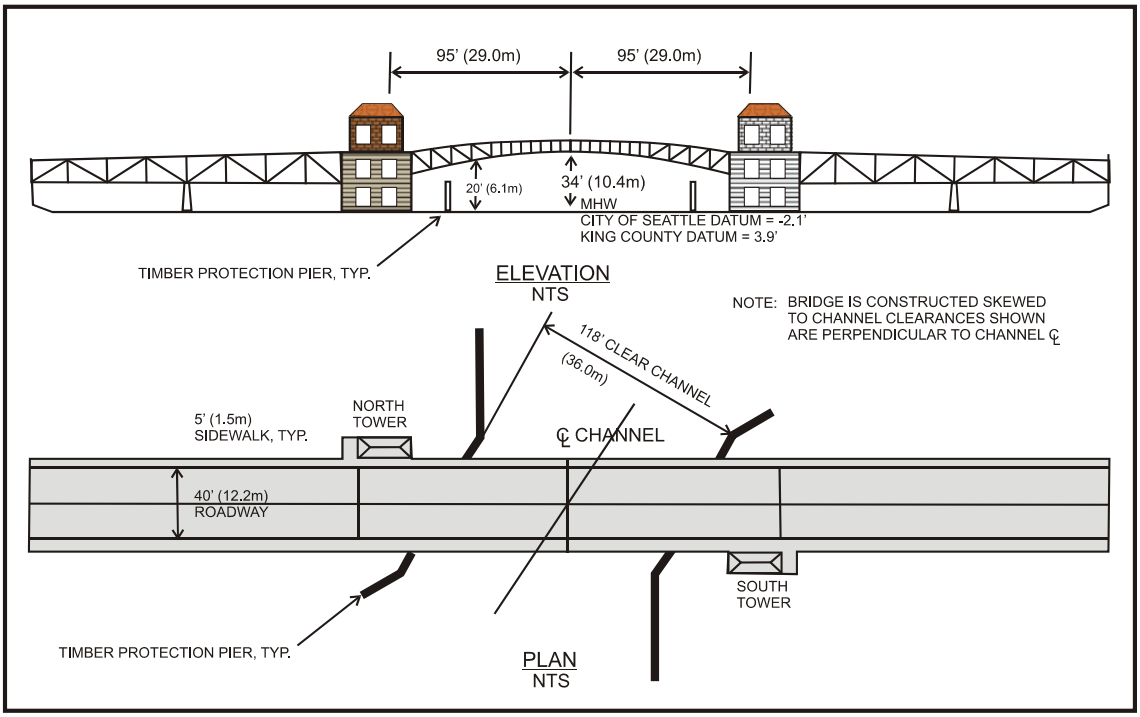

Figure 04
Existing Horizontal Navigable Clearance as Permitted by the U.S. Coast Guard

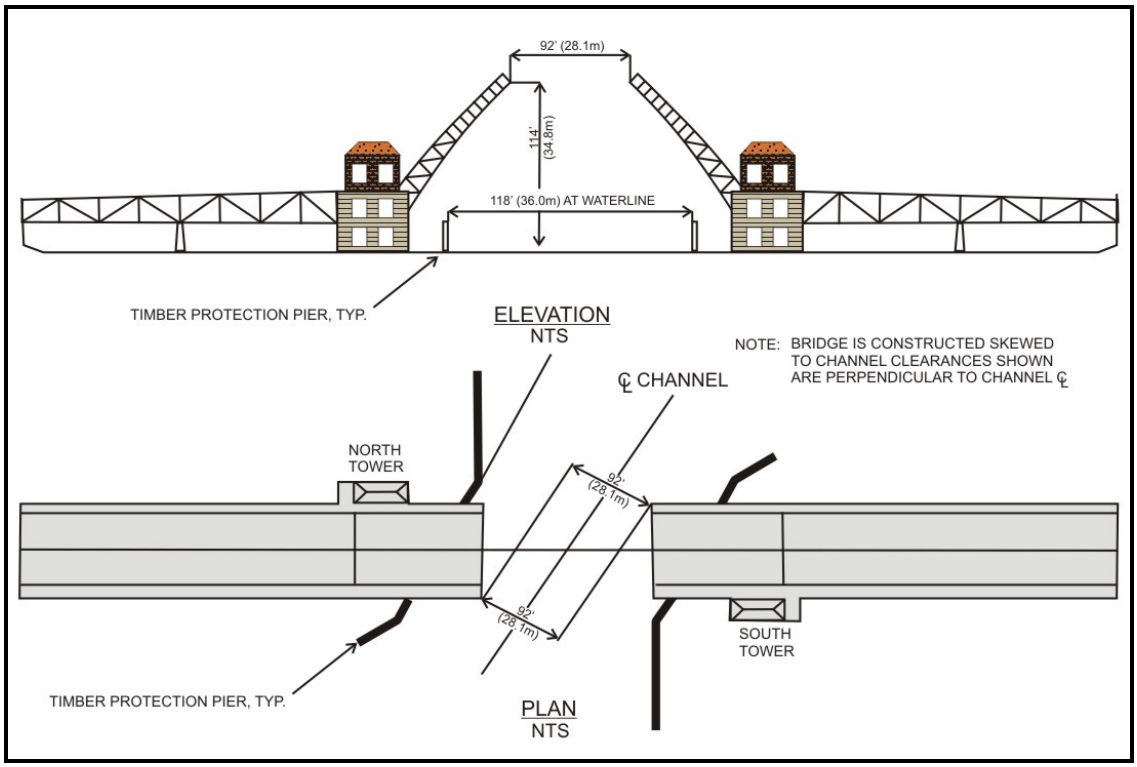

Figure 05
Existing Vertical Navigable Clearance as Permitted by the U.S. Coast Guard and Army Corps of Engineers

3.2.2 Existing Condition and Deficiencies

Despite substantial ongoing maintenance and repairs, the South Park Bridge has suffered significant deterioration over the past 75 plus years. Existing problems worsened significantly following the Nisqually Earthquake in February 2001. The bridge remains vulnerable to future seismic events.

A recent bridge inspection conducted by King County to National Bridge Inspections Standards (NBIS) resulted in an existing condition rating of 4.0 out of a possible score of 100 (based on U.S. Federal Highway Administration criteria). This is among the lowest ratings given to any bridge structure in the State of Washington and places the bridge in the “Structurally Deficient” category

Due to the original shallow placement of the piles for the bascule piers the bascule piers are susceptible to settlement and could become unstable during a major earthquake. The North Pier, in particular, is suffering from settlement due to insufficient pile embedment in the glacial soils (see Figure 06). Originally, timber piles under the South Pier were driven to a tip elevation of -73 feet which reached the glacial soils. Piles under the North Pier were driven to -97 feet; however, driving was halted before the glacial soils were reached for unknown reasons. This condition may have contributed to the movement and cracking of the bridge piers relative to each other over the decades, thus causing misalignment of the bascule leaves. Consequently, the center lock and guide tracks require periodical modifications and adjustments to maintain bridge operation. In addition, poor quality concrete used in the original construction of the bridge is causing chemical deterioration of structural elements. These combined deficiencies have caused cracks in the bascule piers (Photos 02 - 04).

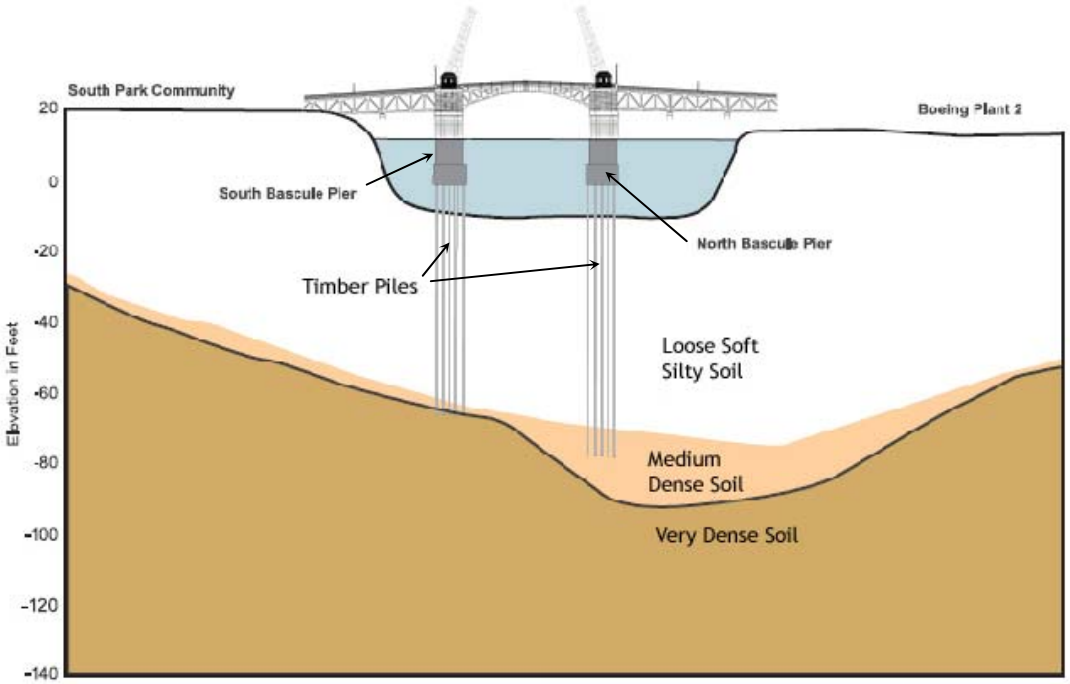

Figure 06
Insufficient Pile Depth

Photo 02
East Face, North Bascule Pier

Photo 03
South Face, North Bascule Pier

Photo 04
Multiple Cracks in North Bascule Pier (Southeast corner shown)

More detailed description of the existing bridge condition can be found in the *South Park Bridge Rehabilitation Feasibility Study Technical Memorandum* prepared by Parsons Brinckerhoff, Inc. in May 2003[11].

3.2.3 Rehabilitation History

A number of major rehabilitation efforts have been carried out since the early 1970s. These efforts have focused on the repair of damaged and poor quality concrete or the mitigation of foundation settlement effects. The program started with the underpinning of the approach column footings in 1971 and 1974. In 1982, the bascule piers were post tensioned to prevent further outward movement of the pier walls. Throughout the 1980s and 1990s, regular repairs were made to replace spalling concrete and realign the bascule leaves as the piers continued to settle. While chipping away the spalled and cracked concrete during these repairs, inspectors determined that the cause of the damage was due to rebar corrosion and uniformly poor quality concrete. Concrete deterioration has been attributed to either sulphate attack, alkali-silica reaction, or delayed ettringite formation[2].

3.3 Soil Conditions

Geotechnical investigations conducted by Shannon and Wilson and communicated in the 2004 geotechnical report[3] (included as Volume 3 of this document) indicate that subsurface conditions under the project area consist of man-made fill and marsh deposits in the upper regions of the soil profile. This is underlain by loose to medium dense alluvial deposits consisting primarily of sand and very soft to medium stiff clayey and silty estuarine deposits. These normally consolidated non-glacial soils are underlain by over consolidated glacial soils (glaciomarine drift) that consist of stiff to hard, clayey silt to silty clay with some sand and gravel. The elevation (NAVD88) of the glacial soils ranges from approximately -95 feet under the proposed north bascule pier to approximately -60 feet under the south bascule pier. The geotechnical report indicates that the upper, non-glacial soils have insufficient load-bearing capacity to support the bridge and have the potential to liquefy in a seismic event. Liquefied soil, if it started to move, could induce large lateral loads on the bridge foundations which would have to be resisted to prevent misalignment of the bascule span or failure of the foundation itself.

The soil within the proposed project area is known to contain a number of contaminants. The extent of the hazardous material and the proposed mitigation measures are described in the Draft Environmental Impact Statement[10] and summarized in section 12.2.1 of this document.

3.4 Existing Utilities

A number of existing utilities run through the project area, including water, sanitary and combined sewer, stormwater, steam, telephone, natural gas, fuel oil, fiber optic, and electrical power lines. The interested parties include King County, the City of Seattle, the City of Tukwila, Boeing, Qwest, Puget

Sound Energy, and a number of owners of fiber optic lines. A detailed description of the existing utilities and potential measures to mitigate disruption due to construction is included in the *2004 Utilities Technical Report*[9]. The only utilities that run along the current bridge alignment on 16th Avenue South are the water and sanitary sewer lines for the City of Tukwila. A large number of utilities lie under the north bridge approach and serve Boeing Plant 2. A smaller number of utilities serve the South Park neighborhood on the south shore that conflict with the planned bridge construction and related soil improvement.

The north approach span has been designed to accommodate Boeing utilities and provide clearance for their vehicles. The approximate locations of existing utilities have been incorporated into the project base map, but the final design component of the project will verify utility locations and levels. Coordination with Boeing will be required to either avoid or relocate the utilities that run under the existing wharf.

4.0 Proposed Bridge Replacement

King County evaluated four alternatives[8] for replacing or removing the existing bridge. The preferred alternative – a new bascule bridge – was selected because it would have the least impact to the project area community while improving road safety and preserving the navigational channel. Comments from the public and other agencies reflected a strong preference toward a bascule bridge, primarily to minimize the disruption to the community and retain the character of the existing structure while maintaining the navigable waterway.

The proposed bascule bridge will be designed according to current design standards (outlined in Appendix A, Structural Design Criteria) which will provide the following improvements:

- Allow the existing bridge to remain open during construction of the new bridge.
- Comply with the current seismic code and the more stringent changes to the AASHTO seismic design specification that are expected to occur in the next few years.
- Be constructed with foundations placed deep into glacial till to improve the bridge's sustainability during a seismic event and avoid the pier settlement problems.
- Provide ground improvements to mitigate the effects of soil liquefaction during even a moderate seismic event.
- Improve sightlines and stopping sight distance.
- Provide roadway geometry, surface, markings and barriers that conform to current federal and local government standards.
- Provide a safe combined pedestrian and bicyclist path on the bridge.
- Provide a solid bridge deck permitting better collection of water, which will improve water quality at the site.
- Improve visibility for drivers at the intersection of 14th Avenue S. and S. Dallas Street.
- Provide state of the art mechanical and electrical systems to improve operational control and reliability over the existing structure.
- Improve life cycle costs of the bridge using better materials and a more robust design.

4.1 Proposed Alignment and Profile

4.1.1 Alignment

The proposed replacement bridge will be constructed on the downstream (west) side and adjacent to the existing bridge (see Volume 2, Sheet 22). The alignment requires a slight bend in plan for the bridge to be built adjacent to the existing bridge while providing adequate clearance to keep the existing bridge in operation during construction of the new structure. This alignment was also chosen to provide adequate horizontal clearance between buildings belonging to the Boeing Company and the back for the sidewalk on the new bridge.

4.1.2 Profile

The proposed vertical profile is developed to meet the following design criteria:

Design Speed	35 mph
Posted Speed	30 mph
Stopping Sight Distance (Max.)	267 feet
Maximum Profile Grade	5.0%

4.2 Project Datum

The vertical datum for this project is NAVD88. The US Coast Guard permit drawings were revised in August 2002 to show that the minimum acceptable clearance under the bridge above the MHW level is 34 feet. The MHW level was defined in the permit drawings as -2.1 feet relative to the City of Seattle Datum and 3.9 feet relative to the King County Datum.

To convert the MHW value into the project reference datum, the elevations and datums conversion table from the City of Seattle Standard Plan Set (Drawing # 001, reproduced in figure 07) was used to determine the elevation of the MHW in reference to the NAVD88 system. It was found that, based on the above mentioned table, -2.1 feet in the City of Seattle system did not equate to 3.9 feet in the King County system. For the purposes of this project, the more conservative (higher) MHW elevation converted from the King County system was used and set at a value of 7.64 feet (NAVD88).

In July 2006, David Evans and Associates of Portland, Oregon, completed a hydrographic survey of the Duwamish Waterway within the project area[7]. The survey used the Mean Lower Low Water (MLLW) level datum. Tide Station 92 – Duwamish Waterway (USACE 2003) on the survey corresponds with the MLLW level and was referenced to the U.S. Army Corps of Engineers website. The MLLW level (0.00 in the David Evans survey) is at elevation -2.42 feet in terms of the NAVD88 Datum.

Based on the surveyed elevations on the existing bridge provided by King County, PB engineers have performed a number of calculations to convert the elevations shown on the as-built drawings to the NAVD88 system. In March 2007, King County engineers thoroughly reviewed and verified the calculations prepared by PB. The decision reached after the March 2007 review was that elevation 0.00 feet on the as-built drawings correspond to an NAVD88 elevation 9.6 feet (see Figure 07 for a graphic explanation of the relative datums).

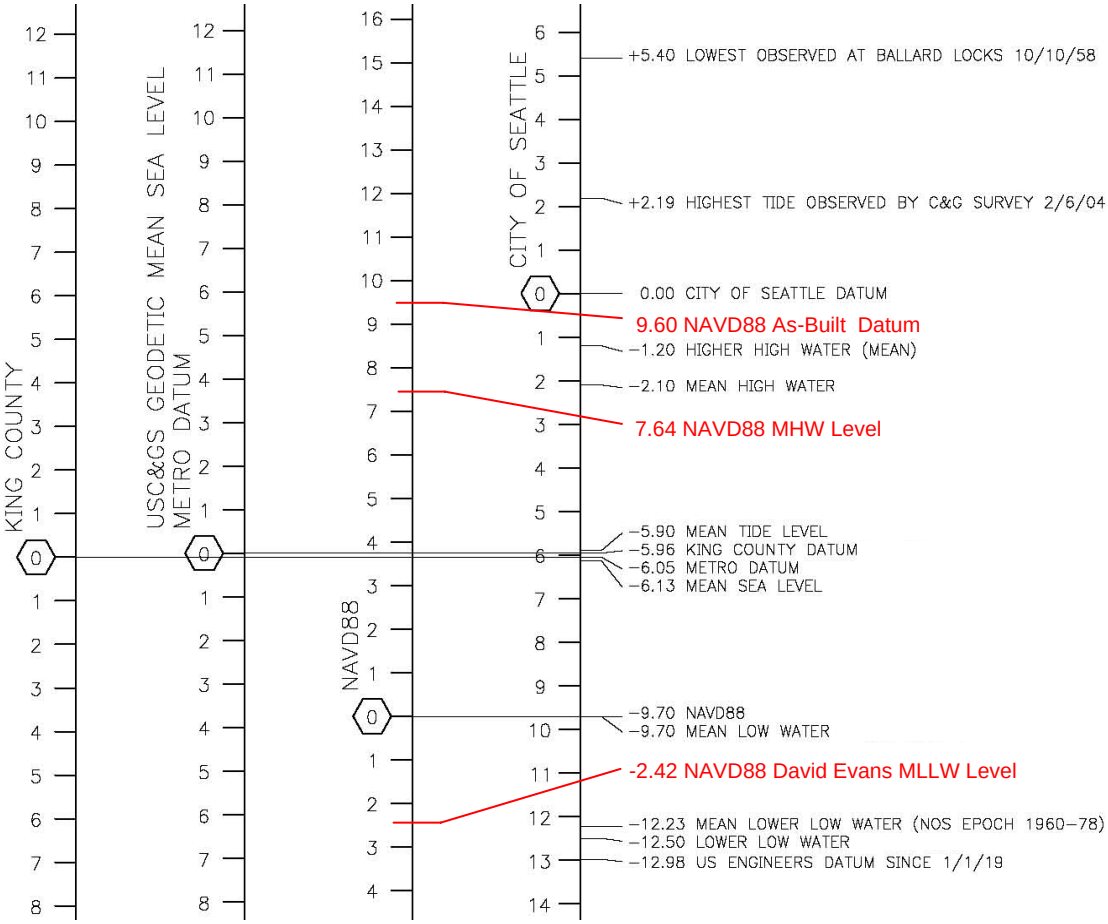

Figure 07
Project Datums
Figure Taken from City of Seattle Standard Plan Set

4.3 Impervious Area

Total impervious areas for proposed project are estimated to be 100565 square feet on the northern half of the bridge and 102550 square feet on the southern half of the bridge. These areas include bascule span area. The existing impervious areas are estimated to be 67,820 square feet on the northern half of the bridge and 71,310 square feet on the southern half of the bridge. The net increase in impervious area on the northern half of the bridge is 32,745 square feet, and the net increase in impervious surface on the southern half of the bridge is 31240 square feet.

The following table shows various impervious areas within the proposed bridge foot print.

	Northern Half (sq. ft)	Southern Half (sq. ft)
Existing Impervious Surface	67820	71310
Added Impervious Surface	32745	31240
Replaced Impervious Surface*	55450	63340
Existing PGIS	51110	66005
Added PGIS	23355	23275
Replaced PGIS	41570	51395

* Existing impervious area that is removed to sub-grade and then replaced

4.4 Drainage

This project is exempt from core requirement # 3 (Flow Control) of King County Surface Water Design Manual (KCSWDM) as it drains to Duwamish River below River Mile 6 (S Boeing Access Road) and meets the criteria for direct discharge to the river as described on page 1-30 of KCSWDM.

This project requires Water Quality (WQ) treatment facilities for both the north and south halves of bridge per core requirement #8 of KCSWDM as more than 5000 sq. ft of new Pollution Generating Impervious Surface (PGIS) is added to each side (See above table). Since the threshold for new PGIS is exceeded for both the threshold discharge areas, they are not exempt from core requirement #8. The water quality applications map of KCSWDM shows the project lies in Basic Water Quality Treatment Area. The runoff from this project is discharged via non-fish-bearing conveyance system (closed conduits) to the ordinary high water mark of the Duwamish River that has a mean annual flow of more than 1000cfs, therefore basic water quality menu can be used (refer to section 1.2.8.1 page 1-62, exception # 3 of 2005 KCSWDM). Enhanced Basic water quality menu is not required to be used because project drains to Basic Treatment Receiving Waters (Green River is Listed in Appendix 1-C of DOE Stormwater Manual-Vol 1). Ecology considers the Duwamish River and the Green River as one water body. This was confirmed with Ed O'Brien, Dept. of Ecology via e-mail correspondence.

The required target surface for water quality treatment will include New PGIS only which will be 23355 sq ft for north half and 23275 sq ft for south half. The

required target surfaces will not include Replaced PGIS as the new or added impervious totals less than 50% of existing impervious surface.

As the runoff from from the New PGIS is mixed with runoff from replaced PGIS and the non-PGIS surfaces such as sidewalks, the area recommended to be treated will include these surfaces. Treatment of replaced PGIS is recommended because it drains to Duwamish River which is a 303d listed water body with TMDL restrictions. Therefore a conservative approach to water quality treatment such as the proposed full retrofit of water quality treatment will facilitate issuance of the Army Corps of Engineers permit for stormwater outfalls. The runoff from bascule span will go into bascule pits, so bascule span area is not included for water quality treatment. The area recommended to be treated for north half will be approx. 81460 sq ft (1.87 acres) and for south half of bridge will be approx. 87845 sq ft (2.01 acres).

Stormwater that enters the bascule pit will be pumped out several times each year, during non-storm events. A sump pump will be provided in each bascule pit with pump logic for manual on and automatic off. This will in turn be written into the Maintenance Manual for bridge operation. All effluent from the bascule pit will be routed through the water quality facility.

Various types of Basic Treatment facilities available are- Biofiltration Swale, Filter Strip, wet pond, wet vault, Stormwater Wetland, Combined Detention and Wetpool facility and Sand Filter. There is not sufficient right-of-way or sufficient flat grade available for providing a wet pond facility without a significant acquisition of property. Due to physical constraints of project area, a water quality wet vault or similar facility is recommended for water quality treatment. A wet vault is an underground structure similar to detention vault except that it has a permanent pool of water that dissipates energy and improves the settling of particulate pollutants. It is most practical for small catchments (less than 10 acres of impervious surface) with high land values because it is relatively expensive.

Stormwater runoff from the new bridge and impervious areas will be collected via a series of catch basins and piped to water quality wet vaults. Approach span runoff will be collected in drains at regular intervals along the approaches. Basic water quality treatment will be performed in the wet vaults to remove suspended solids and floatable greases and oils. The water quality wet vaults will be designed in accordance with Section 6.4.2 of the 2005 *King County Surface Water Design Manual* (KCSWDM). Two wet vaults are proposed instead of a single facility treating equivalent target acreage, as that will facilitate issuance of the Army Corps of Engineer's permit for the stormwater outfalls.

Additionally because projected Average Daily Traffic (ADT) for 2027 Horizon Year will exceed 25,000 on the bridge, oil control will be required to meet future water quality requirements. It is anticipated that oil control will be accomplished using a coalescing plate oil/water separator or similar technology placed downstream of the wet vaults.

A solid bridge deck rather than open steel grating on the movable span is proposed to better facilitate collection of roadway runoff, which will improve water quality at the site. Bridge runoff from the bascule spans will be collected in the counterweight pit and

Treated stormwater will be released into the Duwamish Waterway through new 18-inch outfalls on each side, north and south, of the project area. The proposed 18" outfalls are adequate for this projects 25 yr stormwater conveyance requirement. No detention will be provided for stormwater discharged into the Duwamish Waterway.

Future study at the final design stage should verify if any additional treatment will be required due to revisions or updates to Clean Water Act Section 303d Total Daily Maximum Load (TDML) requirements on the Duwamish Waterway. This report is limited only to current regulations and changes to current regulations may require future design modifications.

4.5 Proposed Typical Section

4.5.1 Roadway Sections

The proposed typical roadway sections are shown in Volume 2, Sheets 2, 3, and 29.

4.5.2 Bridge Sections

The proposed bridge will have four 11-foot traffic lanes, a 4 foot median, and a 13-foot-wide bicycle/pedestrian walkway along the west side of the bridge which complies with SDOT design criteria (see Volume 2, Sheet 29). The total width from the inside face of the east side traffic barrier to the inside face of the bicycle/pedestrian walkway along the west side is 64 feet 4 inches, which is a significant improvement from the existing bridge width of 52 feet.

4.6 ADA Compliance

The 5% maximum profile grade and the 13-foot width of the combined bike and pedestrian path comply with the requirements of the Americans with Disabilities Act (ADA) accessibility guidelines.

4.7 Bridge Span Layout

The new bridge will be constructed with a five-span structure approximately 918 feet in length. The main movable span will be 227 feet between trunnion centerlines (see Volume 2, Sheet 22) and the fixed-decks on top of the main piers will be approximately 40.5 feet long. Altogether, the movable span and the fixed deck together will be approximately 308 feet long. The approach spans will be nearly symmetrical on each side of the main span. Each of the

two approaches will consist of two spans, each approximately 153 feet in length (see Volume 2, Sheet 22). The machine room with all electrical assemblies will be installed within the main piers of the movable span.

4.8 Navigation Channel Clearance

4.8.1 Horizontal Clearance

The existing horizontal clearance of the navigation channel is 118 feet between the pier protection and narrows to 92 feet at the tips of the two open leaves. The proposed bridge will increase the horizontal clearance of the navigation channel from the existing condition to 125 feet, with unlimited vertical clearance. This meets the requirement set by the U.S. Coast Guard and Army Corps of Engineers (Appendix B). Furthermore, the proposed bridge is much wider than the existing structure, which also increases the trunnion to trunnion distance due to the bridge skew relative to the waterway. As a result of these two factors, the main trunnion to trunnion distance on the new bridge will increase to 227 feet from the existing center of roll to center of roll distance of 190 feet.

4.8.2 Vertical Clearance

The vertical clearance at the center of the navigation channel will remain at 34 feet above the Mean High Water level as per the 2002 revision to the U.S. Coast Guard permit drawings[5] and reconfirmed by a letter from the U.S. Coast Guard on November 21, 2006 included in Appendix B.

4.9 Structural Type Selection

4.9.1 The Main Span

Among the four structural alternatives presented in the *Structural Alternatives Study*[8], the double-leaf bascule movable bridge replacement alternative has been selected as the preferred alternative by King County. The bascule replacement alternative was selected as the preferred alternative based on the evaluation of alternatives in the Draft Environmental Impact Statement (DEIS)[10] for the project and consideration of subsequent comments from agencies and the public. This alternative fulfills the functional requirements for maintaining or improving road, waterway, and pedestrian traffic; preserves the character of the existing historic structure; and minimizes the potentially adverse impacts on the environmental, economic and social structure of the South Park community that could be incurred by other alternatives.

Specific advantages of the double-leaf bascule bridge, as compared to the other movable bridge types, are as follows:

- Relatively low profile
- Provides unlimited vertical clearance

- Can maintain marine traffic operation while one leaf is under service.
- Simplification of maintenance procedures and training since there are several other similar double-leaf movable bridges in the area that are owned by SDOT who will be the eventual owner of this bridge
- Preserves the aesthetic of the existing movable bridge, a community priority
- Shorter operation cycle time

Several other movable bridge options for this site were reviewed and eliminated during development of the DEIS[10]. Since the writing of the DEIS, further studies have been performed to compare the relative advantages and disadvantages of different types of bascule span structures during this preliminary design, which are described in Chapter 8 of this document.

4.9.2 The Approach Spans

Previous studies conservatively suggested using a WSDOT standard W83G girder for the approach spans. Based on further investigation, the engineers on the design team have replaced the W83G girders with less costly W74FG girders. An advantage of using W74FG girders is that it allows lowering of the roadway profile and limiting the maximum slope to within 5% while still maintaining the required vertical clearances without increasing the number of approach span piers.

5.0 Design Criteria and Specifications

5.1 Design Specifications and Guidelines

The following seismic design related design codes and specifications are listed in Appendix A – *Structural Design Criteria.*

- WSDOT "Bridge Design Manual LRFD" (BDM, M23-50), with Revisions up to February 26, 2007.
- AASHTO "LRFD Bridge Design Specifications," 4th Edition, with 2007 Interim Revisions.
- AASHTO, "LRFD Movable Highway Bridge Design Specifications" 2nd Edition, with 2007 interim revisions.
- AASHTO, "Recommended LRFD Guidelines for the Seismic Design of Highway Bridges" Final Draft, 2006 Edition.
- Seismic Criteria For California Marine Oil Terminals Volume 1, 1999

The order of precedence of the design specifications shall be:

First:	Project Specific Design Criteria, i.e. Appendix A – *Structural Design Criteria*.
Second:	WSDOT Design Specifications,
Third:	AASHTO Design Specifications,
Fourth:	Other Specifications.

Because AASHTO is in the process of updating their seismic design criteria, the requirements for seismic design among the above documents are not consistent at this time. Should there be contradictions between any of these design codes, they will be evaluated individually during final design.

5.2 Seismic Design Criteria: Major Design Codes

Although seismic design specifications define the requirements for an acceptable design as a capacity vs. demand equation, the current major design specifications differ in the specifics of the defined capacity requirements and the design demand scenario. In addition to the current design standards in effect, it is likely that there will be changes to the existing AASHTO specification which will increase the return period of the "no-collapse" level seismic event.

To develop robust seismic design criteria for the South Park Bridge replacement, a number of existing standards have been evaluated to determine the appropriate approach for this structure. Presented below is a brief review of the relevant design standards and their requirements for both seismic demand and structural capacity.

Relevant standards are:

- WSDOT "Bridge Design Manual LRFD" (BDM, M23-50) (**WSDOT BDM**)
- AASHTO "LRFD Bridge Design Specifications", 4th Edition (**AASHTO LRFD**)
- AASHTO "Recommended LRFD Guidelines for the Seismic Design of Highway Bridges, December 2, 2006 (**AASHTO-SEIS**)
- "Seismic Criteria for California Marine Oil Terminals", 1999 Edition (**CAL-MARINE** for reference purposes only)

5.2.1 Seismic Demand

Seismic demand is generally defined as the peak ground acceleration generated during an earthquake that occurs, on average, once within the return period specified for the design level being considered.

A two level design approach is the current trend in seismic design of major bridge structures. Although the terminology used to define the two levels of design are different in the above referenced design codes and specifications, they usually consist of an upper level seismic design event and a lower level seismic design event. In Appendix A of this document, the terminology used to describe the upper level earthquake event is "Life Safety Level Design Earthquake" and the terminology for the lower level earthquake is "Operational Level Design Earthquake".

Return Period of Design Earthquakes

The return period for any random event is that time period over which, on average over a large number of periods, the event will occur once per period. Table 01 below provides the relationship between the probability of exceedance and the return period.

Return Period			Probability		Years
2475	Years	=	3%	in	75
975	Years	=	7%	in	75
475	Years	=	15%	in	75
108	Years	=	50%	in	75

Table 01
Probability of Exceedance vs. Return Period

WSDOT BDM

Chapter 4.1 explains that WSDOT has adopted the new Multidisciplinary Center for Earthquake Engineering Research (MCEER) seismic design criteria for bridge structures for specific large projects such as the Alaska

Way Viaduct Replacement. These criteria use two distinct levels: a less severe or Life Safety Level with a 108-year return period and a more severe, Operational level based on a Maximum Credible Earthquake (MCE) with a 2,500-year return period. It is possible that the 2,500-year return period will be reduced to 975 years for the next edition of the Bridge Design Manual. It should be noted that the WSDOT BDM uses different terms to describe the two levels of design earthquakes than the terminology used in most other major design specifications and those used in this document.

For typical bridge projects within Washington State, WSDOT currently requires bridges to be designed for an earthquake with a 475-year return period.

AASHTO LRFD

Section 3.10.3 of the AASHTO LRFD code lists three Importance Categories that define the relative importance of different structures and how each type should be designed. The Importance categories are:

- Critical Bridges,
- Essential Bridges, or
- Other Bridges

The associated commentary for this section explains:

> Essential bridges are generally those that should, as a minimum, be open to emergency vehicles and for security/defense purposes immediately after the design earthquake, i.e., a 475-year return period event. However, some bridges (Critical Bridges) must remain open to all traffic after the design earthquake and be usable by emergency vehicles and for security/defense purposes immediately after a large earthquake, e.g., a 2,500-year return period event. These bridges should be regarded as critical structures.

The clear defined difference in the design earthquake level used for Essential Bridges and that used for Critical Bridges is a revision from the previous version, the 3rd edition.

AASHTO-SEIS

Section 3.2 of the AASHTO-SEIS code, Performance Criteria states:

> Bridges shall be designed for the life safety performance objective considering a seismic hazard corresponding to a 5% probability of exceedance in 50 years. Higher levels of performance, such as the operational objective, may be used with the authorization of the bridge owner.

5% probability of exceedance in 50 years corresponds to a 975 year return period for the Life Safety performance criteria.

CAL-MARINE

This code specifies that peak ground and spectral acceleration for a site may be evaluated using the National Earthquake Hazard Reduction Program (NEHRP) design maps. Accelerations are provided on these maps for 10 and 2 percent probability of exceedance in 50 years, which correspond to Average Return Periods (ARPs) of 475 and 2,475 years, respectively.

Peak Ground Acceleration of the Design Earthquake

One of the basic seismic design parameters that defines the magnitude of a design level earthquake is the Peak Ground Acceleration (PGA). This is sometimes also referred to as Design Peak Ground Acceleration (DPGA), or Peak Bedrock Acceleration, and is usually expressed as a percentage of the gravitational acceleration on earth. In all of the referenced standards, the PGA for the return period under consideration is defined on contour maps prepared by the United States Geological Survey (USGS), although the actual data used differs slightly between specifications. In addition, all specifications allow site-specific response spectra to be developed to determine peak and spectral accelerations.

- **WSDOT BDM** uses the seismic data prepared for the 2002 USGS National Seismic Hazards Mapping Project. (accelerations are applied in the horizontal direction only)
- **AASHTO LRFD** uses the USGS prepared, 1988 edition of NEHRP Recommended Provisions for the Development of Seismic Regulations for New Buildings.
- **AASHTO-SEIS** uses response spectral accelerations taken from ground motion maps prepared by USGS. This document uses a slightly different method to calculate the Design Earthquake Spectral Response Acceleration than the previous two documents.
- **CAL-MARINE** allows the peak ground and spectral acceleration to be evaluated using either:

  -U.S. Geological Survey (USGS) or California Geological Survey (CGS) maps; subsection 3103F.4.2.2 CAL-MARINE,

  -A site-specific probabilistic seismic hazard analysis (PSHA); subsection 3103F.4.2.3 CAL-MARINE.

  The referenced USGS maps are from the National Earthquake Hazard Reduction Program (NEHRP) design map set.

In addition, **AASHTO LRFD**, Section 3.10.2 requires that special, site- and structure-specific acceleration coefficients be determined if:

- The site is located close to an active fault,
- Long-duration earthquakes are expected in the region,
- The importance of the bridge is such that a longer exposure period (and, therefore, return period) should be considered.

Similarly, the AASHTO LRFD Section 3.4 requires a site specific procedure if:

- Soils at the site require site-specific evaluation (i.e., Site Class F soils, Article 3.4.2.1); unless a determination is made that the presence of such soils would not result in a significantly higher response of the bridge.
- The bridge is considered to be critical or essential according to Article 4.2.2 for which a higher degree of confidence of meeting the seismic performance objectives of Article 3.2 is desired.
- The site is located within 6 miles of a known active fault and its response could be significantly and adversely influenced by near-fault ground motion characteristics.

Levels of Design Earthquake Comparison

The Table 02 below is a brief summary of our interpretation of the design level earthquake demand required by the different specifications:

Design Specs.	Category	Return Period (years) 108	475	975	2475
WSDOT BDM LRFD	Others		No Collapse		
	Critical	Operation			No Collapse
AASHTO LRFD 4th Ed	Critical				Emergency Vehicle Operation
	Essential		Emergency Vehicle Operation		
	Others		No Collapse		
Recommended LRFD				No Collapse	
CAL-MARINE			No Collapse		No Collapse

Table 02
Seismic Design Return Periods

5.2.2 Seismic Capacity: Performance Criteria and Structural Capacity

Current seismic design specifications take a two step approach towards defining the conditions by which a structure can successfully withstand a

seismic event. The first step is to establish performance criteria which define the minimum level of functionality during and after an earthquake. An example of a performance criterion might be that the structure be operable, needing only minor repairs after a certain magnitude event. The second step involves outlining acceptable mechanisms by which the structure can achieve the required performance criteria. These mechanisms usually consist of energy dissipation techniques which take the form of predictable, internal plastic hinging or external energy absorption devices.

Performance Criteria

WSDOT BDM

As outlined above, major WSDOT structures are designed for a two level performance criteria; to be safe at the lower level, and to be operational at the higher level corresponding to a major seismic event. In all cases WSDOT specifies that the structure must not collapse during a design level earthquake. Section 4.3 defines bridge collapse as:

> Excessive movement or deformation of piers creating unacceptable bridge performance that may result in loss of life or serious injury. Unacceptable bridge performance includes, but is not limited to, partial or complete loss of span(s).

AASHTO LRFD

This specification is developed with the intention that structures designed in accordance with the AASHTO LRFD may suffer damage during a seismic event, but should have a low probability of collapse. It goes on to define the principles of this approach in Section C3.10.1:

- Small to moderate earthquakes should be resisted within the elastic range of the structural components without significant damage;
- Exposure to shaking from large earthquakes should not cause collapse of all or part of the bridge. Where possible, damage that does occur should be readily detectable and accessible for inspection and repair.

AASHTO-SEIS

Section 3.2, Performance Criteria states:

> Life Safety for the Design Event infers that the bridge has a low probability of collapse but may suffer significant damage and significant disruption to service. Partial or complete replacement may be required.

Structural Capacity: Ductility Design and Energy Dissipation

In recent years, the ductility design concept has been broadly incorporated into major seismic design specifications. This concept recognizes that much of the kinetic energy that builds up in a structure during a seismic event can be dissipated in a controlled manner through inelastic deformation of a structure at predefined locations.

- **WSDOT BDM** allows the use of plastic hinging, base isolation and energy dissipation devices.
- **AASHTO LRFD**, Section 1.3.3 states that "The structural system of a bridge shall be proportioned and detailed to ensure the development of significant and visible inelastic deformations at the strength and extreme event limit states before failure." This section also contains a quantitative method to ensure ductility in connections, allows the use of energy-dissipating devices, and contains provisions to limit the load applied to non-ductile elements. Section 3, Appendix B3 of the AASHTO code also provides a detailed explanation of the mechanisms by which structural capacity is increased due to inelastic, ductile deformation.
- **AASHTO-SEIS** references the concept of energy dissipation through ductile deformation in Sections 3, 4, and 7.
- **CAL-MARINE** describes a similar concept in Division 7

The ductility design concept as specified in the codes may not, however, be applied universally to structures that fall outside of the range of typical, short to medium span highway bridges. The **AASHTO LRFD** and **AASHTO-SEIS** specifications contain the following statement:

> These Specifications are for the design and construction of new bridges to resist the effects of earthquake motions. The provisions apply to bridges of conventional slab, beam, girder and box girder superstructure construction with spans not exceeding 500 ft. For other types of construction (e.g., suspension bridges, cable-stayed bridges, truss bridges, arch type and movable bridges) and spans exceeding 500 ft, the Owner shall specify and/or approve appropriate provisions.

Other design specifications and guidelines contain similar statements.

It is evident that the South Park Bridge replacement falls into the category of bridges outside the scope of the standard specifications. Alternative approaches were adopted where inelastic deformation of the structure would not be acceptable, e.g. in instances that could affect the alignment or functionality of the mechanical systems.

5.2.3 Site Specific Response Spectra

Project site specific response spectra were developed by the geotechnical consultant on the project, Shannon and Wilson, Inc. (see Appendix C and Volume 3) to include the potential for soil liquefaction. These spectra were developed by pairing the rock motion design response for an AASHTO Standard Specifications for Highway Bridges (2002) Soil Profile Type I with rock input motions from previous earthquakes. Using these input motions and soil profiles developed for the site (including shear wave velocity, and dynamic soil properties as well as other parameters), the software package "Pro Shake" was used to calculate the free-field surface response. These results allowed the geotechnical engineers to calculate the average soil

surface spectrum which was compared with the motions recorded during historical earthquakes at nearby sites.

5.3 The Project Specific Design Criteria

Appendix A contains the project specific structural design criteria. Section 2.0 of the design criteria define the accepted codes and standards and where they should be applied for this project. Section 3.0 contains the geotechnical design criteria, referencing the two geotechnical reports (Volume 3) that have been produced for this project and provides guidance for the design of ground improvements and explains the need for a program of settlement monitoring on the existing bridge. Sections 4.0 through 7.0 define the units of measurement, the project material grade specification, the project design loads, and the deflection limits for the design of the structure.

Section 8.0 addresses the Seismic Design Criteria for the project. The basis for what is codified in Section 8.0 has been presented above in Section 5.2 of this document. Since the current major design codes/specifications have inconsistent seismic design requirements, and a major update for the seismic design specifications is expected from AASHTO in the near future, great efforts have been made during the preparation of the project specific criteria for the South Park Bridge replacement project. These recommendations have been written based on discussion between King County, SDOT, and PB. On November 1st of 2006, a roundtable discussion was held including representatives from King County, SDOT, PB, HDR Engineering and Berger Abam Engineers. The resolutions from this meeting formed the basic framework for the project specific seismic criteria including:

- The need for a two level seismic design criteria; an “Operational design level”, and a “Life Safety design level”
- A review of the seismic design methodology that is expected to be adopted in the new AASHTO code in 2007 or 2008
- The need for a site-specific response spectrum was addressed
- Other codes that should be referenced in the development of this criteria were noted
- The general lack of guidelines related to movable bridges was noted and a number of specific issues to be addressed were noted such as the general intolerance of movable bridges to misalignment, the lack of available ductility in the bridge pier, and the need to identify those elements that would be damaged during an earthquake
- Issues related to ground improvements and soil liquefaction were discussed

It is expected the specifications in the project specific structural design criteria will be updated and be further clarified during the next design phase.

6.0 Foundations and Ground Improvements

6.1 Ground Improvements

Geotechnical investigation at the project site conducted by Shannon and Wilson, Inc. indicated the potential risk of soil liquefaction and associated lateral spreading. Therefore, ground improvements in the form of earthquake drains were recommended in the *Geotechnical Report*[3] to mitigate these effects. The recommended ground improvement areas are shown in the preliminary plans (Volume 2, Sheet 52). The actual locations of ground improvements are somewhat flexible pending the results of further environmental and construction right-of-way studies, as well as negotiations with the affected property owners. Further coordination regarding the actual placement of earthquake drains will be required to avoid conflicts with the proposed water quality vaults, outfalls and utilities. The preliminary recommendation for drain layout can be found in section 12.4.2 of this document.

In addition, it is recommended that ground improvements in the form of compaction grouting be used to increase the capacity of the piles supporting the existing bascule and north intermediate approach piers. This will minimize further settlement of the piers due to construction-induced vibrations. Details of the proposed compaction grouting operation can be found in section 12.4.2 of this document.

6.2 Bascule Pier Foundations

Construction of the bascule pier foundations has several constraints and challenges:

- The in-water construction window is limited by the need to avoid disrupting the spawning cycle of a number of species of fish in the Duwamish Waterway. The window is currently assumed to be between August 1 and February 15
- Settlement of the existing in-water pier footings could occur during construction of the new bridge
- Environmental restrictions on noise and vibration will be in effect during construction
- The existing 118 foot navigation channel must be maintained during construction, although movable obstructions such as construction barges are allowed.
- Hazardous materials are contained within the upper layers of the soil at the project site. The contaminated sediment in the Duwamish Waterway has been designated a Superfund area
- It is desireable that the foundations provide a long fundamental period for the structure to reduce the seismic demand force

- The foundations of the new bridge should not suffer permanent deformation during a moderate seismic event. The function of the movable bridge must able to be restored afterward without incurring excessive costs or bridge closures

6.2.1 Deep Foundation Selection

Several deep foundation types and layouts have been analyzed and evaluated:

- 16, 10-foot-diameter drilled shafts per pier
- 62, 2-foot-diameter steel pipe piles per pier
- 126, 2-foot-diameter steel pipe piles per pier
- 154, 2-foot-diameter steel pipe piles per pier
- 16, 8-foot-diameter drilled shafts with steel casing per pier

Seismic design criteria and bascule bridge constructability were the primary considerations for the structural design of the foundation system. As outlined in Section 5.0, the bridge is being designed to be operational after a seismic event with a 108-year return period and is being designed not to collapse after the 975-year return period event. To achieve these design goals, it is highly desirable that the foundation remains elastic during the high level design seismic event. This condition will also limit lateral displacement of footings, potentially reducing the damage sustained by the bascule span superstructure and machinery, which is likely to greatly reduce the cost of bridge repair after an earthquake. At the most sophisticated level of design conducted for this report, the effects of soil liquefaction and the group behavior of the entire foundation have been accounted for, in addition to a traditional multi-modal dynamic analysis.

Some assumptions were made regarding the design of the foundation for this stage of design. LRFD calls for the analysis of the structure under three different limit states: Extreme Event (earthquake), Strength, and Service, which account for deflections and/or settlements. However, the original soils report was done under Allowable Stress Design which does not take into account the Service State. Because this is a preliminary design and the seismic loads on the foundation for the 975-year return period event are likely much greater than those for the Service State, it has been decided that more work should not be done to analyze the soil response for the Service State until the final design phase. The soil response for both the Extreme Event and Strength limit states has been converted to LRFD.

The foundation design for the bascule piers has progressed through a number of iterations. Great effort has been expended to find an appropriate foundation type and layout, that will resist the high level of seismic demand and satisfy the unique constructability restrictions.

At the initial conceptual design phase, sixteen 10-foot-diameter drilled shafts placed by the oscillator method were proposed. Oscillator casing is expensive, and the casing joints are not conducive to carrying bending forces. As a result, these shafts would be uncased in the final condition. The placement of drilled shafts by oscillator also requires a robust reaction platform to carry the large forces generated while oscillating the casing into the soil and when pulling the casing out of the ground. This platform usually takes the form of at least four temporary work piles for each shaft. The large number of high-capacity, temporary work piles (64) required to install 16 shafts made this option less desirable when compared to other footing types. In addition, drilled shafts take longer to install, which could affect the overall in-water construction time frame.

The nearby First Avenue South bascule bridge, a similar structure just downstream of the South Park Bridge, is supported on driven steel pipe piles. This structure was designed in 1995 using a 475 year return period earthquake as the design seismic event. Considering this fact, and based on the Geotechnical Engineer's recommendation, an investigation of a number of foundation alternatives using driven steel pipe piles was performed.

Steel pipe piles offer the following advantages:

- Faster construction
- Less contaminated material requiring disposal
- With all vertical piles, the steel pile foundation imparts a longer fundamental period to the structure which will reduce seismic demand as compared to less flexible, large-diameter drilled shafts

However, because of concerns about settlement of the adjacent existing bridge due to vibration from pile driving, driven piles are limited to 2-foot-diameter closed-end piles or 3-foot-diameter open-end piles.

Based on a comparison with the adjacent First Avenue South Bridge, the first design iteration for the South Park Bridge used sixty-two, 2-foot-diameter conical tipped, ¾-inch thick steel pipe piles per bascule pier. The 62-pile configuration was found to have insufficient capacity to carry the forces generated during a seismic event. The designers then increased the number of piles per pier to 126 and calculated that a maximum of 154 piles could fit within the footing. This increase to 126 pipe piles, however, was found to have insufficient capacity to carry the significant seismic forces that need to be accommodated and the number of piles per footing was increased to 154.

In February 2007, during the midst of the design process, the PB design team conducted an internal design review and invited engineers from PB Americas, King County, WSDOT, and SDOT to attend a review meeting. It was agreed that a number of steps should be taken to reduce the seismic demand by decreasing the mass of the bascule leaves and piers and that options such as battered piles should be considered to increase pile

capacity. It was also agreed that a more sophisticated seismic analysis would be necessary to prove the feasibility of the foundation system.

During the spring of 2007, the structural geometry and material selection was refined for both the bascule span leaves and piers to further reduce structural weight and consequently reduce seismic forces and displacements. Using the reduced seismic demand forces, a number of foundation layouts were evaluated. These layouts included battered pile options as well as options that varied the number of steel piles up to the maximum number of piles that the footing could geometrically accommodate. The conclusion of these studies showed that the pipe piles had insufficient structural capacity despite their tendency to reduce seismic demand by lengthening the fundamental period of the structure. Small-diameter piles are too slender to carry the large combined axial and bending forces over such a significant depth (60-95 feet) of liquefiable soil. Furthermore, while the flexibility of the steel piles reduces the seismic demand, it also allows too much lateral displacement of the footing.

The results and findings from this analysis were valuable to the design team. The designers were able to eliminate non-viable foundation types based on the results of the analysis. Furthermore, using the analysis data, the design team refined the shaft design; instead of 10-foot diameter drilled shafts, the team proposed a revised design that uses 8-foot-diameter shafts with permanent steel casings to be left in the ground to work compositely with the reinforced concrete shaft.

The foundation design proposed for this report calls for sixteen, 8-foot-diameter drilled shafts with 1¾-inch-thick permanent steel casing. Large diameter drilled shafts will decrease the fundamental period of the structure when compared with 2-foot-diameter steel pipe piles, hence increasing seismic demand. Even considering this increase in demand, the 16, 8 foot-diameter shaft configuration is the only option considered at this point in which the shafts themselves have sufficient axial and bending capacity to resist the applied loading during the design seismic event. This design is, in fact, limited by the capacity of the soil itself rather than the structural capacity of the shafts. Furthermore, vibration limitations on the existing structure limit the depth that shafts can be effectively installed into the glacial soils if an oscillator is not used. Battered shafts were not considered as a means to reduce the axial force in the shaft because they would conflict with the existing pier's pile foundation.

The steel shaft casings should be left in place as they are required to develop the necessary moment capacity in the shafts.

It is proposed that the drilled shaft casings be installed either by controlled vibration, oscillation, or internal excavation combined with pushing and twisting into the soil.

In response to the seismic forces generated during the 975-year earthquake, the bascule piers are subject to large overturning moments that result in uplift

conditions in some of the perimeter shafts on the footing. According to the supplemental geotechnical report[12] the uplift capacity of a single shaft in liquefied soil is approximately 2,500 kips. Should the uplift force exceed 2,500 kips, the total load on the shaft group would have a tendency to redistribute among the shafts, resulting in increased downward loads on the shafts on the compression side of the footing. Incorporating seismic dampers in the superstructure attached to the trunnion bearings to dissipate energy during a seismic event could be an effective way to reduce the seismic demand forces. At the final design phase, a more sophisticated, non-linear shaft analysis model could be employed to more accurately predict the load redistribution from the shafts that yield in uplift to adjacent shafts that have not failed. Refer to Section 8.0 for a more extensive description of the seismic analysis.

To establish the feasibility of this approach from both geotechnical and constructability perspectives, the design team discussed foundation constructability with the geotechnical and constructability consultants, as well as representatives from potential contractors who specialize in foundation construction. The design team submitted the foundation design for review by the ADSC: International Association of Foundation Drilling West Coast Chapter Constructability Task Force.

The governing (critical) load combinations for this structure are the load cases that include seismic forces. By comparison, calculations indicate that only 6 out of the 16 drilled shafts under each bascule pier would be required to support the dead weight of the bridge.

6.2.2 Footing Size and Layout

The bascule pier footing is 62 feet by 90 feet by 6 feet thick. The corner nearest the waterway on each pier is beveled to provide clearance for the pier protection (see Sheets 33 and 48 in Volume 2) and the other three corners are beveled to match. The footing size is governed by the seismic design and the desire to reduce the in-water footprint of the footing to minimize environmental impact. A smaller footing would lessen seismic demand by reducing the mass of the structure. However, it would also increase the force in the perimeter piles that resist overturning moments by reducing the distance between these piles and the center of mass of the pier. A larger footing footprint would reduce the forces in the shafts that resist pier overturning moments, but increase the total seismic demand due to increased footing mass. The design calculations indicate that a 62-foot by 90-foot footing is the smallest footing that does not overload the 8-foot drilled shafts that resist overturning.

The Top of Footing Elevation is +0.05 feet in the NAVD88 system. This elevation is the highest elevation that will allow 1-foot of clearance for the bascule counterweight in the open position and achieve the required roadway profile in the closed position. Given that the Top of Footing

Elevation is above the existing river bed elevation, there is no opportunity to push the footing into the navigation channel below the mudline.

At this footing elevation, a 3-foot-thick footing seal is required to resist the hydrostatic uplift within the bascule pier cofferdam.

6.3 Approach Span Foundations

Each of the columns for the intermediate pier will be supported by a 10-foot-diameter drilled shaft. Since no footing is required for this configuration, ground disturbance in this Superfund area would be minimized.

Each approach span abutment will be supported by 6-foot-diameter drilled shafts. The approaches to the abutment will be retained by mechanically stabilized earth (MSE) walls also known as Structural Earth Walls. This wall system has proven to be cost effective to construct and tolerant of seismic-induced displacements.

7.0 Bascule Piers

7.1 Pier Layout

A number of studies have been conducted to establish the preferred layout for the bascule piers. These studies have considered the cost, structural performance, maintenance, and aesthetic implications of a number of different layouts. Input on the layout has been received from SDOT and King County. In general, there is an insignificant decrease in weight to be had through reducing the pier footprint relative to the footing area. This is due to the fact that reducing the pier footprint only reduces the area of the upper floor as opposed to removing any walls that make up most of the pier mass. (see Volume 2, Sheets 33 and 35 to 40, for drawings of the bascule pier layout).

7.1.1 Bottom of Pier Elevation

In April 2007, a study was conducted to identify the most cost effective bascule pier layout with respect to the bottom of pier elevation. The two options considered were a shallow footing with a longer bascule span, and a deep footing with a shorter bascule span. The shorter span with the deeper footing would be achieved by pushing some of the footing into the navigation channel below the mudline while a shallower footing would have to be placed completely behind the fender system, outside of the navigation channel. Cost analysis was performed for the two options, and it was determined that a shallow footing with a longer bascule span cost approximately $2 million less than the deep footing option. This analysis is included in Appendix F – *Bascule Bridge Parametric Study*.

7.1.2 Maintenance Access

Maintenance access is provided to all areas of the pier via a system of staircases and catwalks that are designed to the requirements of the International Building Code (IBC) for maintenance facilities. Stair access is provided to all levels from the west (control tower) side of the pier. Access to the east side of the pier is via catwalks. Access to the road level on the east side outboard of the roadway rail is provided from below the deck by staircases or ladders outboard of the trunnion bearing and a waterproof access hatch to avoid the need for maintenance staff to walk across the roadway.

A minimum 6-feet 8-inches height clearance will be provided for personnel where possible. 8-10 foot vertical clearance will be provided for all machinery maintenance activities, such as equipment removal and replacement. Typically, a 3-foot horizontal clearance is desired to access machinery. Lifting equipment and pick points will be provided to aid in machinery maintenance.

7.1.3 Seismic Induced Shear Forces on Trunnion Bearing

There is a structural advantage to spacing the trunnion bearings as far apart as possible to reduce the seismically induced shear forces on the bearing support. The bascule leaf and counterweight will tend to rotate horizontally during a seismic event. Hence, the greater the lever arm between the trunnion bearing supports, the lower the shear force required to restrain the bascule leaf. The bascule leaf support layout on this bridge takes advantage of this by spacing the bearings as far apart as possible without increasing the overall width of the pier.

7.2 Fixed Deck on Bascule Pier

The bridge deck connecting the bascule span adjacent to the approach spans is a fixed deck supported by steel I sections. The deck itself will be a cast-in-place reinforced concrete (RC) slab (see Volume 2, Sheet 40 and 47).

7.3 Control Houses

Two control houses, one at each bascule pier, are provided on the west side of the bascule bridge. One of the control towers will be fully occupied. The proposed new control houses are more spacious than the existing ones, providing improved visibility and working environment. SDOT has requested the minimum size for the operator's room to be 16 feet by 16 feet. The designers chose to increase the control tower footprint to 16 feet by 32 feet to improve its visual proportions relative to the large pier. Amenities will include kitchen, bathroom, and storage. To accommodate sight lines, the tower height will allow a tender to view traffic and bridge gates from about 25 feet above the roadway. Either a catwalk will be provided on the inboard (east) side of the control tower or the tower will be appropriately glazed to allow the operator to easily view pedestrians below. Stairways will be required, but no elevator is required in the control tower. NFPA-70 National Electric Code working clearances will be observed in the design and construction of the control towers.

7.4 Structural Layout Effects from the Span Drive System

Appendix D contains drawings of the five options that were considered for the span drive system layout. Options 1 through 4 use a mechanical load sharing system while Option 5 uses electrical load sharing.

Fundamentally there are two options for equalizing the load transferred from the span drive motors to the two racks on a given leaf: mechanical load sharing via a differential system or electrical load sharing provided by the electrical control system.

Differential System

Differential systems are in use on the majority of existing movable bridges and have been used with movable bridge machinery for more than 80 years. A differential uses bevel gears to mechanically split torque equally to two output shafts. A modern differential is totally enclosed within an oil-tight housing and partially submerged in oil and requires no more maintenance than a speed reducer without a differential.

Electrical Load Sharing

Electrical load sharing permits the use of mechanically independent drives. Load sharing between the drives is accomplished electrically by one of two methods:

- Passive systems drive two motors in series. The same current is provided to each motor as a result of the design. High slip motors are used. The motors “slip” or slow down in response to a load. If one motor is subjected to a significantly greater load than the other, it slows down and allows the other motor to catch up until the loads and speeds are matched. This basic system has been used on movable bridges for more than 50 years.
- Active systems are set up in a master and slave configuration. Electronics “sense” the current being supplied to the master motor and react to increase or decrease the current supplied to the slave motor. This basic system has been used on movable bridges for approximately 20 years and is only possible with relatively modern control equipment.

7.4.1 Span Drive Layout Options

Option 1

Option 1 is two motors mounted face to face. This option uses mechanical load sharing and is the baseline system for comparison with other options.

- The entire drive system is mounted above the MHW level
- This layout requires two relatively large cuts into the counterweight
- The channel side pier wall must be extended forward to provide the space for the system

Option 2

Option 2 is two motors mounted face to face using mechanical load sharing. Compared to Option 1:

- The secondary reducers and the brakes are moved to the outside of the bascule leaf
- Two large cuts into the counterweight are eliminated
- Holes under the live load shoes are required to provide the space for the drive shaft

- More drive shaft and bevel gears are required

Option 3

Option 3 is two motors mounted face to face using mechanical load sharing. Compared to Option 1:

- The secondary reducers are mounted vertically, requiring an oil pump to ensure proper lubrication of the gears and bearings in the reducers
- Two large cuts into the counterweight are reduced to small cuts
- Some portion of the system will be below the MHW level

Option 4

Option 4 is two motors mounted face to face at the back of the pier using mechanical load sharing. Option 4:

- Two large cuts into the counterweight are eliminated
- This layout occupies the most amount of space inside the bascule pier
- This layout may conflict with the stairway arrangement
- Longer drive system with more mechanical components

Option 5

Option 5 uses two independent drives per leaf. One drive is located outboard of each bascule truss. Load sharing between the drives is obtained electrically. The system does not use a differential. Option 5:

- Two large cuts into the counterweight are eliminated
- This layout allows most of the machinery to be mounted within the enclosed portion of the bascule pier, better protected from the elements, and permits easier access for maintenance
- This layout requires a wider footprint for the pier to accommodate the machinery but, this span drive configuration does not increase the pier width dimension
- Studies have shown that mechanical load sharing provides more reliable equal load transfer in a wide range of conditions

7.4.2 Span Drive Selection

After option 4 was eliminated King County and SDOT evaluated the remaining four options following the design review meeting on February 12th and 13th, 2007. In May 2007, King County and SDOT indicated that Option 3 is their preferred option. This option uses a mechanical differential system to equally distribute load to the two rack gears and uses a vertical secondary reducer configuration to minimize any machinery clearance cutouts in the counterweight and provides the most overhead clearance for the machinery. The machinery shall be enclosed to protect it from the weather and overhead roadway debris.

8.0 Bascule Span

8.1 Bascule Geometry and Configuration

8.1.1 Bascule Leaves

There are two trusses under each bascule leaf deck (see Volume 2 – *Preliminary Design Plans* Sheets 41 to 47 for layout and details). The dimensions and ratios that define the balance and equilibrium conditions in the bascule leaf that govern its design are as follows:

Dimensions

- From centerline of trunnion to the tip of the leaf: 113.5 feet
- From centerline of trunnion to the live load shoe: 16 feet
- From centerline of trunnion to the back of counterweight: 35 feet
- The total length from the back of counterweight to the tip of the leaf: 148.5 feet

Ratios

- The ratio of (centerline of trunnion to the live load shoe) / (centerline of trunnion to the tip of the leaf) = 0.140
- The ratio of (centerline of trunnion to the live load shoe) / (centerline of trunnion to the back of counterweight) = 0.457
- The ratio of (centerline of trunnion to the back of counterweight) / (centerline of trunnion to the tip of the leaf) = 0.308

The locations and sizes of the counterweight and the live load shoes indicated above are preliminary and may be refined at the final design phase. The leaf balance equations can be found in Volume 3 of this report.

8.1.2 Structure Type and Layout Study of the Bascule Span

Fixed Trunnion vs. Scherzer Rolling Lift

A study was conducted in the spring of 2007 to compare two of the potentially feasible bascule type bridges. This study included an extensive evaluation of both the Scherzer rolling lift and trunnion bascule bridge alternatives. The trunnion bascule span was chosen as the preferred structural type for the reasons described below. In addition to the rolling lift vs. trunnion analysis, parameters such as truss spacing and footing depth were varied to generate a number of different alternatives for comparison. The design metrics of nine different bridge designs were tabulated and compared to provide a broad overview of the general size, shape, seismic requirements, and other design drivers for a number of similar bridges. Two proposed designs and seven existing bridges were evaluated. The supporting documents for this analysis are included in Appendix F – *Bascule Bridge Parametric Study*.

Bascule Leaf Opening Angle

An advantage often cited for selecting a rolling lift is that a smaller opening angle is required to provide the same clearance envelope as compared to a simple trunnion bridge. This is because the leaf rolls away from the channel opening as it rises. In this study, the required opening angle for a rolling lift bascule leaf is 65º, compared to 73º for a trunnion-type bascule leaf. Because a smaller opening angle is required, these bridges typically require slightly less time to open than other types of bridges. However, this study indicated the smaller opening angle does not reduce the pier size. Since the bascule leaf rolls away from the channel, long tracks are required to support the leaf.

Footing Size and Span Length

The Scherzer rolling lift allows the center of roll (with the span closed) to be pushed closer to the front of the pier in comparison to the trunnion position relative to the pier in a trunnion bascule design. Looking at this feature alone, it appears that a rolling lift structure could have a shorter bascule leaf span as compared to a trunnion type bascule structure. Further investigation revealed that the rolling lift structure increases the moment arm between the center of stiffness and center of mass of the pier. This increases both the downward forces on the channel side row of piles and the uplift forces on the shore side row of piles. To counteract the increased forces on the edge piles of the rolling lift structure and shorten the moment arm, longer footings are required. Consequently, longer bascule leaves are needed to keep the large foundations out of the navigation channel. This study indicated that both a rolling lift and trunnion type bascule structure require approximately the same span length.

The design team considered using a deeper footing that extended into the navigation channel below mudline to take advantage of the shorter span of the rolling lift. However, a cost comparison revealed an approximately one million dollar cost penalty in foundation construction that would outweigh the benefits of a shorter span. Additionally, the shorter truss length combined with the longer piers reduced the aesthetic appeal of the bridge in profile.

8.1.3 Seismic Analysis

A number of different seismic analyses have been performed on the bascule span to determine the critical design case. These analyses have primarily been performed to establish the loads to apply to the foundation analysis, but other issues such as trunnion and counterweight displacement have also been investigated as well. The foundation and superstructure analyses used two separate numerical models, and a number of iterations were performed to ensure equilibrium and compatibility at the foundation and superstructure interface.

The model used for designing the substructure incorporated the North Pier and North Bascule leaf only. The glacial soil elevation is lower under the

North Pier than the South Pier making the North Pier the governing design case. Four similar models were analyzed using this configuration to investigate the effects of the different design-level earthquakes and the effect of using damping devices attached to the trunnion bearings to absorb some of the kinetic energy generated during an earthquake. The four options are as follows:

1) No damper – 108-year return period response spectrum: This analysis was conducted to verify that the bridge will be operational after the 108-year event and for comparison with the 975-year event. The maximum lateral displacement calculated for this case was found to be approximately 2.8 inches at the footing level, 3.0 inches at the bascule trunnion level, and 4 inches at the truss tip. The maximum overall lateral force applied to the footing is approximately 8,500 kips. The maximum overall bending moment at the footing is approximately 185,000 kip-feet.

2) No damper – 975-year return period response spectrum: This analysis was conducted to determine the design forces and displacements in the structure if no special energy dissipation devices are used. In this case, the trunnion bearings are considered to be rigidly connected to the pier superstructure. This analysis yielded the highest design forces and lowest design displacements. The maximum lateral displacement calculated is approximately 7 inches at the footing level, 7 inches at the bascule trunnion level, and 9.5 inches at the truss tip. The maximum overall lateral force applied to the footing is approximately 16,000 kips. The maximum overall bending moment at the footing is approximately 342,000 kip-feet.

3) Seismic damper with unrestrained counterweight – 975-year return period response spectrum: This analysis was conducted to determine the effect of using damping devices attached to the trunnion bearing mounts, which allow the entire trunnion, leaf, and counterweight assembly to move independent of the bascule pier. This analysis yielded the lowest design forces and the highest design displacements for the life safety design level earthquake. The maximum lateral displacement calculated for this case is approximately 3.5 inches at the footing level, 17 inches at the bascule trunnion level, and 19 inches at the truss tip. The maximum overall lateral force applied to the footing is approximately 11,500 kips. The maximum overall bending moment at the footing is approximately 240,000 kip-feet.

4) Seismic damper with restrained counterweight – 975-year return period response spectrum: This analysis was conducted to examine the effect of restraining the counterweight against lateral movement using a shear key and track arrangement. The results of this calculation were that the lateral displacement increased to approximately 5 inches at footing level and reduced significantly to approximately 6 inches at trunnion level, and 10 inches at the truss tip.

The calculated design force and moment increased to the same level as that found in the analysis of Option 2.

In addition to the single-leaf model used for overall evaluation and for structural design, two other numerical models were developed to evaluate different aspects of the superstructure and to confirm that the analyses used for structural design were indeed the critical cases. The two models are as follows:

1) Single bascule leaf in the open position – 975-year return period response spectrum. This case was found not to be critical. Furthermore, Section 3.4.1 of the *AASHTO Movable Highway Bridge Design Specification, 2nd Edition* (2007) states that:

   "When the movable spans are in one position, either open or closed, over 90 percent of the time, one half of the seismic loads due to the design level earthquake may be used as the design forces for the other position."

2) The full, double-leaf bascule bridge was modeled in the closed position for both the 108-year and 975-year return period earthquake. This model took the different soil conditions under the North and South Piers into account and modeled the center lock mechanism as a pin connection. Part of the purpose of this analysis was to find the forces at the center lock during the two design seismic events and to investigate how the center lock affected load transfer between the two leaves in the closed position.

The analysis performed for this section of the report is by no means exhaustive and needs refinement in the final design stage. One conclusion that may be drawn from the work performed is that the application of energy dissipation devices would significantly reduce the forces applied to the pier foundation. Displacements are also limited which will minimize potential residual foundation displacement after a major earthquake. There are, however, significant constructability and functional difficulties that will be encountered if the trunnion bearings are to be isolated from the rest of the structure using seismic dampers. A system would have to be designed that would only allow movement to occur in an extreme seismic event. Such a system would likely have to incorporate sacrificial elements in the drive train that would allow the trunnion rack to decouple from the rest of the drive system to activate the dampers but at the same time provide the same level of actuation, maintenance, and reliability performance as a fully rigid system under normal operating conditions. We recommend that final design of the structure progress under the assumption that energy dissipation devices will not be used unless it becomes apparent that they are necessary to ensure that the foundation system performs correctly.

8.1.4 Bascule Leaf Layout

The two main trusses run parallel to the direction of traffic and cantilever out from the trunnion and live load shoe. The truss centerlines are spaced 52 feet 4 inches apart and are symmetric about the centerline of the bridge. Steel stringers span between the main trusses and cantilever 6 feet off both sides at 11-foot spacing. The bridge deck cantilevers a further 1.5 feet beyond the end of the stringers.

The designers considered moving the main trusses closer to reduce the overall width of the pier. This did not provide any advantage, however, and was discarded for the following reasons:

- The same interior space is required to allow clearance for the deck in the open position regardless of truss spacing, unless longitudinal deck joints are employed. The roadway section is not symmetric and therefore would require a longitudinal joint in the middle of a traffic lane, which would be undesirable from a safety standpoint. Refer to figure 3 in Appendix F: Bascule Bridge Parametric Study for a diagram of the deck clearance envelope.
- Drive machinery for the preferred drive system option is located between the main trusses; hence more space is required inboard rather than outboard of the trusses to facilitate maintenance operations
- Reducing the distance between trunnion bearing supports increases the shear force in the support walls during a seismic event

A small cantilever beyond the main trusses has been provided to slightly reduce the depth of the deck stringers, and more importantly to ensure that the bascule leaves of the new bridge aesthetically resemble those of the existing bridge.

Maintenance access to the center locks is provided via a catwalk attached to the lower chord of the east truss. Staircases will be provided between sections L2 and L6 when the chord slope is greater than 17% (refer to Sheets 32 and 41 in Volume 2, Preliminary Design Plans). Access to the west center lock is provided via a catwalk across the tip of the leaf from the east center lock location.

8.1.5 Buffer Cylinder Locations

Buffer cylinders will be provided to dampen the impact when the bascule leaf closes. This will also prevent damage to the bascule leaf and the machinery in the event that the span approaches the fully closed position at excessive speed due to a mechanical or electrical malfunction. The expected configuration is to mount the buffer cylinders vertically at the rear of the bascule pier, as far as possible from the centerline of the trunnion. The

cylinders will contact strike plates mounted on the counterweight when the leaf nears the fully closed position.

8.1.6 Trunnion Girders and Support Layout

Two options have been considered for the layout of the trunnion supports: a single-bearing system and a double-bearing system. In the single-bearing configuration, the bascule leaf is supported by one bearing on the outside of each of the two main bascule trusses. In a double-bearing system, an additional bearing is mounted inboard of each bascule truss. Sketches of the different arrangements are shown in Figures 08-10.

If a single-bearing support system is used, the trunnion girder rotates with the leaf and the bending moments in the trunnion girder will be larger than that of a double-bearing system. A large diameter trunnion girder will be required to reduce the deflection of the trunnion girder during the leaf opening and closing operations and to provide additional torsional stiffness to the bascule leaf (Figure 08).

If a double-bearing support system is used, then the inboard bearing can be supported either by a static trunnion girder or by a column (Figure 09). If a static trunnion girder is used, cutouts would be required in each truss to allow the trunnion girder to pass through the truss to support points outboard of the truss (Figure 10). The cutouts would form an arc including the same angle as the bascule leaf opening angle. If a column support system is used, then large cutouts would be required in the counterweight to avoid interference with the bearing support column.

Final seismic design of the trunnion support system will be a complex endeavor. The trunnion girder support is a rigid system and relies on proper alignment to function correctly. Typically, the kinetic energy developed during a seismic event is dissipated through ductile yielding of elements in the structural system. To take advantage of the ductility design allowed by current codes and ensure proper foundation performance, it might be necessary to connect energy absorption/dissipation devices to the bearings. If such devices are used, then design of the bearing mounts must consider how the large displacements at the bearings will work with the functional requirements of the mechanical system.

A single-bearing support system is proposed for two reasons:

- This configuration simplifies the structural layout within the bascule leaf and eliminates the need for cutouts
- If a double-bearing system is used, it would be difficult to attach an energy dissipation device to the inner bearing. Such a device would create even more spatial conflicts within the leaf structure

The seismic analysis performed to date indicates that there could be approximately 12 inches of displacement at the trunnion bearing supports

during a 975-year seismic event if dampers are used. Refinements to the design and analysis are expected to reduce this value.

At present, seismic dampers are not included in the recommended design, but some of the practicalities of detailing such a system have been considered as part of the preliminary design process. Two options considered for the trunnion bearing mounts that would allow sufficient deflection for the dampers to be used effectively are:

1) The trunnion bearings could be mounted on top of a steel frame that will deform plastically during the 975-year seismic event and will need to be repaired or replaced during the post-earthquake repair. Jacking space would be provided to support the trunnion during repair. The ductile deformation of the steel frame could assist the earthquake dampers in dissipating kinetic energy.

2) The trunnion bearings could be mounted on a pair of steel plates, one affixed to the bearing and one affixed to the concrete bearing support wall. During an earthquake, most of the bolts holding the bearing in place would be designed to shear off and allow the bearing support plate to slide across the steel plate beneath it, thus activating the earthquake dampers.

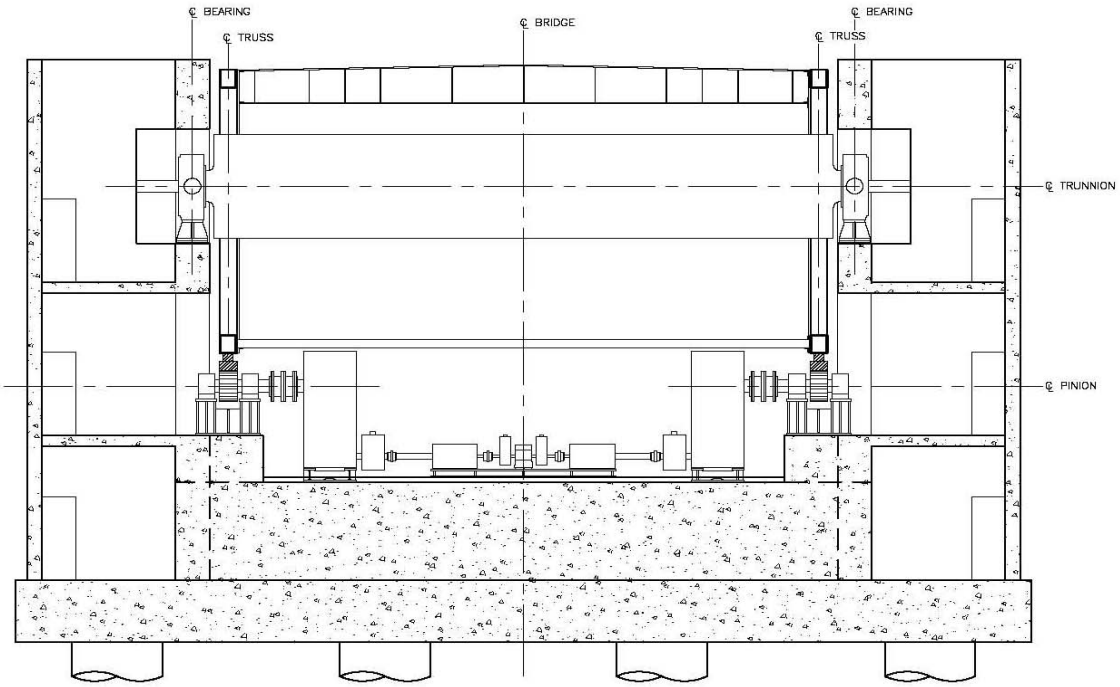

Figure 08
Bridge Pier Section: Single bearing layout option

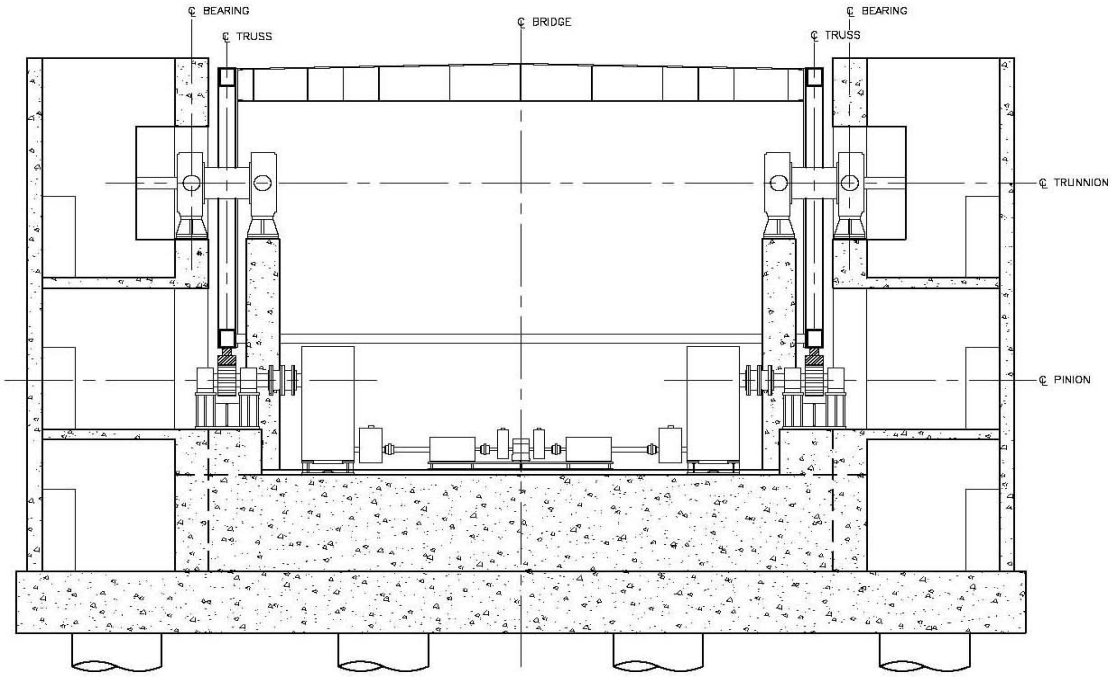

Figure 09
Bridge Pier Section: Double bearing layout option on column

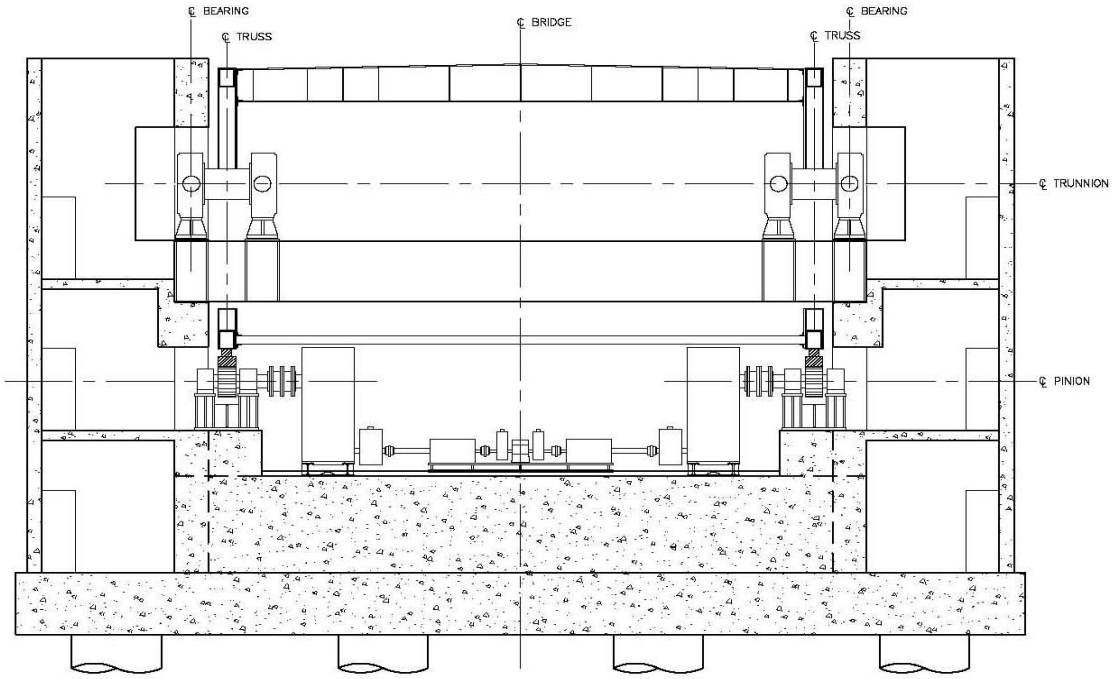

Figure 10
Bridge Pier Section: Double bearing layout option on girder

8.2 Rack and Pinion Gears

Typically, the two options for rack and pinion orientation on a bascule bridge are inward and outward facing teeth on the circular arc rack gear. The choice of gear orientation depends on maintenance and geometric considerations. The primary reason for using a rack gear with outward and downward facing teeth is that this orientation prevents hard particles and debris from collecting in the rack teeth, which can cause excessive wear and damage to the gear system. According to WSDOT and SDOT maintenance staff, the majority of their major maintenance issues arise from debris collecting in the drive system.

There are two secondary advantages of an outward facing, rather than inward facing, rack gear. First, to achieve the same load on the drive pinion gear, the internal gear configuration must be of a larger diameter than the similar external configuration, which can create spatial conflicts within the machinery area. In other terms, having the teeth facing outward maximizes the diameter of the rack – pinion contact circle for a given envelope of space in the pier. Therefore, the torque requirement and fatigue stress on the drive system is reduced. Second, an outward facing rack gear allows the use of a simply supported, rather than overhung or cantilever, pinion gear. The cantilever pinion tends to deflect under load resulting in uneven wear on the gear teeth. For these reasons, an outward and downward oriented rack gear is proposed.

Photo 05 shows a rack with downward teeth and simply supported pinion being installed on the Route 33 Bridge in West Point, Virginia, recently designed by PB.

Photo 05
Rack with Downward Teeth, Route 33 Bridge West Point, VA

8.3 Bascule Span Deck

8.3.1 Deck System

Two deck systems were considered for the bascule span: a solid cast-in-place deck and an exodermic deck. An open grid steel deck was not considered due to concerns of roadway pollutants entering the Duwamish Waterway through grid openings. Steel decks also have poor ride quality and skid resistance and require longer stopping distances due to the inherent low coefficient of friction. Furthermore, open grid decks typically create more traffic noise, can be subject to fatigue cracking, and must be filled in at the sidewalk locations.

This report recommends the exodermic deck system as the preferred option. This system combines a steel grid of 6-inch-deep T-sections spaced 12 inches on center with a 4.5-inch-thick concrete overlay reinforced in both directions that works compositely with the steel grid. The overall deck thickness is approximately 9 inches. The grid consists of main bearing bars running in the direction of traffic and distribution bars running perpendicular to the main bars. The exodermic deck system spans between the bascule leaf floor beams and is designed as a continuous member.

The advantages of the exodermic deck system are as follows:

- As a closed-deck system, it protects the steel superstructure and prevents road pollutants from entering the river
- This system is relatively lightweight compared to a solid, reinforced concrete system
- The top concrete layer eliminates noise and improves ride quality as compared to an open grid deck
- Since the concrete deck is located mainly above the grid, the neutral axis of the system is closer to the welds and punch outs in the grid. This dramatically reduces the live load stress range under service conditions
- The large spanning capacity allows for the elimination of intermediate joists, reducing the overall weight of the leaf

8.3.2 Deck Drainage

Typically, stormwater from the bascule span will be collected in the counterweight pit via a gutter system where a pump will convey it to the water quality wet vaults on shore. The control system for the pump has not been determined at this time. Either a fully automatic system or a manual on/automatic off system activated by bridge maintenance and control staff could be selected.

9.0 Approach Spans

9.1 Superstructure

A number of different girder arrangements were evaluated for the approach spans during preparation for the 2003 *Structural Alternatives Study*[8]. These options included steel I-girders and various prestressed concrete girders ranging from shallow (58 inches) to deep (83 inches), as well as bulb tee girders. These options were evaluated using cost as the basis and examined for their effect on the whole structure considering the type and number of each girder required. The study recommended using eight W83G girders supporting a cast-in-place deck.

On further analysis at this stage of design, the W83G girder was found to be a conservative selection. A WF74G was a more appropriate choice with the additional benefits of being a shallower, lighter structural member. Therefore, the proposed approach superstructure will be comprised of WF74G girders at 8-foot 3-inch spacing with an 8-inch cast-in-place reinforced concrete deck (see Volume 2, Sheets 29 to 31). The prestressed girders will be made continuous for live load. Expansion joints will be provided at the bascule pier and at the abutment girder seats. Approach span guard rails will be precast concrete with steel extensions adjacent to the mixed use sidewalk.

9.2 Substructure and Foundations

Because of the large span length required from the abutment to the bascule pier, intermediate piers are necessary to support the girders. The intermediate piers and abutments will be constructed without footings to limit the amount of contaminated soil that needs to be removed from the site. Drawings and details of the substructure are located in Volume 2, Sheets 24 to 28.

10.0 Mechanical and Electrical System

10.1 Mechanical System

10.1.1 Bascule Span Drive Machinery

The discussion of span drive machinery options that were investigated for this report is presented in Section 7.4.

Of the options presented for consideration, Option 3 was selected as the preferred option. The drive design is conventional, has been used, and continues to be used extensively on movable bridges throughout the United States. A schematic drawing of this option in both plan and elevation views is provided on Sheet 49 in Volume 2.

The span drive machinery will be designed to meet the project design criteria outlined in Section 5.0.

The prime movers for the span drive machinery are two 200 horsepower electric motors. Each motor has been sized to meet AASHTO design requirements and to move the bridge from the fully closed to the fully open position in approximately 75 seconds. One motor will be used at a time to operate the bridge, and the motors will be alternated on a schedule to avoid motor deterioration through lack of use. The use of two alternating motors provides a back up motor in the event of a motor failure and is considered essential for maximum reliability.

A motor brake is provided between each motor and the primary differential reducer. The brakes are located on the reducer input shaft so that motor failure and removal of the motor for repair will not reduce braking capacity. The primary differential reducer is located at the centerline of the bridge and will provide the initial speed reduction and load sharing for the machinery that extends from the output shaft extensions of the primary reducer to the racks and rack pinions.

A floating shaft using flexible single engagement gear-type couplings connects the primary reducer and the vertically oriented secondary reducer with the high speed shaft located below the output shaft. The output shaft of the secondary reducer is coupled to the rack pinion shaft via a flexible double engagement gear-type coupling. The rack pinion is straddle mounted between two self-aligning rolling element pillow block bearings to provide maximum stability and limit deflection during operation. The rack will be mounted to the bascule truss. It will likely consist of a single piece weldment that can be aligned in the field at assembly to ensure the best possible gear tooth contact. Both the rack and rack pinion will also be designed to meet the standards of the American Gear Manufactures Association (AGMA).

Machinery brakes are provided on the output side of the primary differential reducer. In the unlikely event of a failure in the differential, this location for

the machinery brakes provides added safety compared to placing the machinery brakes on the input side of the primary differential reducer. The machinery brakes are located on the input shaft of the secondary reducer. It is likely that the support for the machinery brake will be integral with the secondary reducer. The integral mounting allows for shop assembly of the brake with the speed reducer, making it easier to achieve the desired alignment between the brake assembly and the brake wheel.

The only non-conventional aspect of the mechanical design is the orientation of the secondary reducer. It is proposed that the secondary reducer be vertically oriented with the high speed shaft located below the output shaft. This orientation was selected to limit modifications to the structure and the bascule pier that would result from other orientations of the secondary reducer. The proposed orientation in no way affects the capacity or integrity of the reducer. This orientation will, however, require a circulating lubrication system to be installed on the secondary reducer instead of a splash lubrication system, which is common on horizontally oriented units.

A splash lubrication system in the proposed orientation would require the secondary speed reducer input shaft seal to be under a head of oil with a large volume of oil above the seal. This could result in significant leakage in the event of seal failure. A circulating lubrication system will be used to eliminate this risk.

Circulating lubrication systems are common on speed reducers and can be designed to be highly reliable. In all likelihood the system would consist of an electric motor driven external pump with hard piping to all required locations. Appropriate controls will be incorporated to ensure effective monitoring of the lubrication system.

10.1.2 Span Support System

Presently it is anticipated that each bascule leaf will be supported by two bearings, with one bearing located outboard of each truss. The basis for this form of support is in part due to seismic considerations. The elimination of the inboard bearing also reduces the complexity of structural design with regard to potential interference issues.

With this type of system, the trunnions are cantilevered outboard of the bascule truss. The two trunnions on each leaf act as a common shaft that is supported in two bearings and are connected by a large-diameter steel tube or box girder that spans across the bascule leaf. As the shaft is a built up element rather than a single prefabricated part, the onsite alignment of the trunnions and the bearings will be critical to the successful operation of the bridge.

Several options with regard to bearings can be used to support the bridge. The bearings fall into two basic categories, each of which has various configurations: plain and rolling element (anti-friction) bearings. Plain bearings are made up of a journal (shaft) and a bushing. The journal rotates

relative to the bushing and the motion between the two contact surfaces is sliding. Rolling element bearings are made up of an inner race, outer race, and rollers that fit between the inner and outer race. As the name suggests, the motion between the contact surfaces is primarily rolling. Rolling element bearings have significantly less friction than plain bearings because a rolling action results in less friction than a sliding action. Both the plain and rolling element type can be provided as self-aligning bearings.

Three span support bearing types were investigated as possible options for the South Park Bridge:

- Plain cylindrical bearing (no self-aligning capability)
- Plain spherical bearing (self-aligning)
- Spherical roller bearing (self-aligning)

The investigation focused on the function, reliability, maintenance, and cost associated with each of these bearing types. Additional discussion regarding these bearing types is presented below:

Plain Cylindrical Bearing

The plain cylindrical bearing has been successfully used on many movable bridges and is probably the most common type of span support bearing in service on movable bridges today. The primary advantages of the plain cylindrical bearing are its proven track record, relatively simple design, and low cost compared to the other bearing options.

The significant disadvantage to this bearing is the inability of the bearing to compensate for misalignment between the trunnions. Although the trunnions can be designed for adjustability, there will always be some degree of misalignment between the trunnions. In addition, the alignment of the trunnions changes as the span opens due to changes in loading conditions. Given this disadvantage, the plain cylindrical bearing is not the preferred option.

Plain Spherical Bearings

The plain spherical bearing is similar to the plain cylindrical bearing except that the bearing can compensate for misalignment during operation. This ensures more uniform distribution of load than can be obtained with the plain cylindrical bearing.

The disadvantage of this bearing compared to a plain cylindrical bearing is cost. Although it is too early in the design process to identify cost accurately, it is anticipated that this type of bearing would be at least 50% more expensive than a comparable cylindrical bearing.

Spherical Roller Bearings

The spherical roller bearing is a completely different concept than the plain bearings discussed above. As with the spherical plain bearing, the roller bearing is a self-aligning bearing that compensates for changes in the

alignment of the trunnion as the span opens and allows for greater tolerances with regard to the initial alignment of the trunnions.

In addition to having all of the features of the plain spherical bearing, the roller bearing also offers considerably reduced friction. This friction reduces the power required to operate the span. As a result of the reduced power requirements, it is often possible to reduce the size of the machinery required to operate the bridge, which can reduce cost for the mechanical and electrical components.

Our investigation revealed that the total torque required to operate the span using roller bearings is approximately 17% less than when using plain bearings. This reduction in torque may result in lower horsepower drive motors and smaller drive machinery than would be possible with a plain bearing system. It was calculated that a 200 horsepower drive motor would be required using a plain bearing system as opposed to a 166 horsepower drive motor required for a roller bearing system. The actual savings in motor size could be less than calculated depending on the motor sized available as well as other factors related to the design of the drive system.

The typical disadvantage to rolling element bearings is cost. It is likely that roller bearings would be the most costly of all the bearings considered. The increased cost of the bearing would be offset to some extent by the reduction in machinery size and lower cost of electrical components due to the reduction in friction and motor horsepower. These costs have not been quantified at this stage of design.

Roller bearings offer a significant maintenance advantage over plain bearings. Plain bearings typically require weekly lubrication for a bridge that opens as frequently as is anticipated for the South Park Bridge. The construction of rolling element bearings allows for a large reservoir of grease, and the maintenance cycle is greatly reduced as a result. Quarterly lubrication of the rolling element bearings is expected. In addition, the lubricant in the rolling element type bearing should be flushed annually. Lubricant leakage from rolling element bearings with properly designed seals is negligible compared to plain bearings, which are typically not sealed.

Bearing Selection

All of the bearings investigated are capable of providing adequate support for the South Park Bridge and are currently in successful service on movable bridges in the United States. However, because of the cantilever trunnion arrangement on this bridge that uses a discontinuous shaft to connect the two bearings. It is important to have the ability to compensate for changes in trunnion alignment is important. The use of a self-aligning bearing will allow for alignment compensation; therefore, we recommend either spherical plain or rolling element span support bearings for use on this bridge.

It is likely that the total mechanical cost will be somewhat less if rolling element bearings are selected over plain spherical bearings; however, the

cost impact to the total project would be negligible. Presently, the machinery design is based on plain bearings as this is a more conservative approach with regard to the size and capacity of the machinery at this phase in the design process. Using rolling element bearings would reduce the physical size of the machinery from that which we have depicted on Sheet 49 in Volume 2.

Personal preference and maintenance impacts are likely to be the drivers for the selection of the appropriate bearing type. Therefore, the selection of bearing type is best left to King County with input as required from the mechanical design team.

10.1.3 Bascule Span Center Locks

Many different types of span locks are used on movable bridges throughout the United States and on bridges in the State of Washington. The locks are either lock bar-type systems or jaw-type systems.

Lock bar-type systems use some form of bar and a system of rigid guides and a receiver (located on the span opposite the guides). The lock bar is pulled out of the receiver to permit operation of the bridge. Some clearance is necessary to allow for the movement of the lock bar in the guides and receiver. This clearance results in relative movement between the bascule leaves under traffic loading. Over time, the clearance typically increases due to wear and adjustment is required. Proprietary designs also exist that are spring loaded to allow for zero clearance and to cushion traffic loads.

There are many variations of jaw type span lock systems. The system that is currently in use on the First Avenue South Bridge in Seattle is the recommended system for the South Park Bridge replacement. This system is comprised of jaws that clamp a receiver mounted to the opposing leaf. When the jaws are engaged, they are preloaded to provide zero clearance. A hydraulic cylinder with an accumulator or a mechanical spring can apply the preload. If the preload is exceeded, the cylinder or spring compresses to cushion the load. Following the Nisqually earthquake in 2001, WSDOT reported that this system has performed well under the anticipated traffic loading, as well as under seismic loading during generated during that event.

The design requirement for this bridge is for the span locks to survive a 108-year seismic event. The center lock systems described above can be designed to withstand the forces associated with this event in the vertical and transverse directions. The force in the longitudinal direction is in excess of 1000 kips. Resisting this load is not practical, and therefore the center lock must be designed to slip under these forces. The recommended lock system can be designed to slip as required by increasing the bearing area at the jaw and receiver interface. In addition it is likely that materials typically associated with sliding bearings would be used at this interface.

The other issue with the 108-year seismic event is the calculated displacement of nearly 4 inches at the end of each leaf in the longitudinal

direction. This requires a minimum separation of 8 inches between mating center lock components in the longitudinal direction. Typically the separation between the mating span lock components in the longitudinal direction, on a bridge of this size, would be approximately 2 inches.

The recommended system can be designed to accommodate the required separation distance by increasing the size of the components to withstand the increased moment loads that result.

A schematic diagram of the proposed center locks is provided on Sheet 50 in Volume 2.

10.2 Electrical Control System

All electrical and control system designs and commissioning specifications will comply with the most recent editions of the following codes and standards:

- AASHTO – 1988 and 2000: Movable Highway Bridge Design Specifications
- NFPA – 70 (NEC) National Fire Protection Agency, National Electric Code
- MUTCD – (Manual on Uniform Traffic Control Devices)
- U.S. Coast Guard 33 CFR Part 118 – Navigation Lights/Signals
- NETA ATS1 – International Electrical Testing Association Acceptance Testing
- NFPA – 79: Electrical Standard for Industrial Machinery
- ANSI/NECA-1: Standard for Good Workmanship in Electrical Contracting
- ANSI/ISA – 84: Standard for Safety Instrumented Systems
- IEC – 61508: Standard for Functional Safety
- IEEE Standard C2-National Electric Safety Code

A schematic drawing of the electrical system can be found in Volume 2, Sheet 51.

10.2.1 Electrical Power Systems

Electrical Service

Electrical power to the bridge will be from the north side for both bascule piers. The service will be 480 volt, three-phase a.c. power through a disconnect switch to feed the north bascule pier motor control center (MCC). A three-phase sub-feeder will be used to deliver power to the south bascule pier MCC. This sub-feeder will be routed through a submarine conduit. A diesel-powered standby generator will be located on the north side for emergency operations of both bascule leaves. In addition, a smaller standby generator will be located on the north side for control tower and facility heating, lighting, and receptacles for both bascule piers.

Motor Control Centers

Motor control centers will be located on each bascule pier. They will serve as the primary electrical power distribution source, with switchboards and circuit breakers for the bridge. The MCC will have all motor starters and will feed the main motor drives, control tower lighting, and receptacle distribution panels.

10.2.2 Control System

Three types of control systems were considered: Programmable Logic Controller (PLC), hardwired relays, and a hybrid of relays and PLC. Based on discussions with King County and operations and maintenance personnel associated with the bridge, a PLC control system is proposed.

The PLC system will use a primary processor with a “cold-backup” processor configuration. A remote I/O (input/output) network will connect distributed I/O throughout the bridge and will be routed through a submarine duct. There will be additional hard-wired interlocks and controls for safety circuits, including the emergency stop circuits. All control will be designed to be fail-safe with an adequate level of redundancy to provide a level of fault tolerance.

Wireless communication was considered for the control system as an option. It was decided that the hardwired network approach provides better reliability and security.

In addition to the PLC and hard-wired safety circuits, there will be a manual emergency operation mode. Should the PLC primary and backup processors fail, the bridge traffic controls and bascule leaves can be operated from the MCC with the understanding that extra operator vigilance is needed due to the absence of some interlocks.

Interlock bypasses will be provided for the operator to recover from most instrumentation failures.

10.2.3 Main Motor Drives

The main motor drives will be four quadrant regenerative, SCR (silicone rectifiers) type. The drives convert 480 volts a.c. to 500 volts d.c. and control motor direction, torque, and speed. The drives are fed individually from contactors in the motor control center through isolation transformers. There are four motors and drives. Two motors and drives operate each leaf, but only one will operate at a time. An automatic alternating circuit will switch between drives and motors.

The use of a.c. induction motors and flux vector drives was considered as an alternative. However, SDOT operations and maintenance personnel already have several d.c. SCR motor drives in their inventory. Therefore, it was determined that the d.c. SCR drives are preferred because of SDOT personnel’s familiarity with these types of systems.

11.0 Pier Protection

11.1 Geometric Constraints

A system of vertical and battered 2-foot-diameter open ended steel pipe piles with steel wales has been designed for the new fender system. The location and angle of the bascule piers in relation to the channel creates a section of fender that has approximately 7 feet of clearance from the edge of the channel to the face of the new bascule pier. For this segment of the fender, it is not possible to use battered piles due to interference with the new bascule pier foundation. Instead, more closely spaced vertical piles have been used in combination with dolphins consisting of a group of 7, 2-foot-diameter steel pipe piles (refer to Sheet 48 in Volume 2 - *Preliminary Design Plans)*.

11.2 Fender Design

AASHTO-specified design for vessel collision force is a combination of strength, geometry, and probability. Rather than designing pier protection to resist any impact possible by all vessels in the channel, the bridge and pier protection is designed to allow a certain annual frequency of collapse using the following parameters:

- Vessel size, type, speed, direction, and frequency
- Waterway geometry
- Water depth and current
- Structural response of the structure

Based on discussion with King County, Austin Pratt at the United States Coast Guard (USCG) and SDOT, it has been agreed that designing the pier protection system for the full AASHTO-specified impact is too onerous a criterion. The AASHTO-specified impact would result in excessive, unjustified expense given the frequency of vessels traveling under the bascule bridge, the history of very few collisions in the area and the sacrificial nature of the system. Furthermore, in contrast to the First Avenue South Bridge which is located at a bend in the river and does have a history of bridge strikes, both the upstream and downstream approaches to the South Park Bridge are straight. Therefore, the proposed design approach will be to design a fender structure that will yield and deflect a vessel away from the bridge pier. The posted speed limit for marine traffic in the Duwamish Waterway under the South Park Bridge is 7 knots.

The geometry of the fender system is defined by the need to maintain the navigable channel while at the same time minimizing the span of the bascule leaves. Furthermore, designing the new pier protection to appear similar to the existing structure will be consistent with the community's desire to preserve the character of the existing structure. The majority of the pier

protection system consists of pairs of open ended 2-foot-diameter steel pipe piles, one vertical and one battered at a 3 to 1 slope. They extend approximately 10 feet above MHW and are spaced approximately 10 feet apart. 14 inch x 14 inch steel wales are attached to the face of the vertical piles every 3 feet for the top 24 feet. At the segment closest to the bascule piers, where there is insufficient space to place the battered piles, vertical piles are spaced at 6 feet and dolphins will be placed at either end to control the deflection of the fender into the bascule pier (refer to Sheet 48 in Volume 2 of this report for details). The presence of the existing bascule pier footing prevents supporting piles from being placed for a 44' section of the fender system that spans between two dolphins on the east side of the new bridge. This section is far from the bascule pier and oriented in such a way that if a craft could pierce the fender system then it would miss the bascule piers.

This pier protection layout has been analyzed using the approach outlined in the AASHTO code to determine both the force of impact and energy of impact of the design vessels at a variety of design speeds and impact angles. As a first approximation, an elastic analysis was performed to determine the force carrying capacity (Resistance) of the fender system. These results were used to determine the allowable design speed and angle of impact for vessels anticipated to travel through the bridge opening. The results of this study are shown in Table 03 below:

Vessel	Dead Weight Ton	Resistance	Impact Angle	Max Speed
	(Short Tons)	(kips)	(degrees)	(knots)
Impact with Vertical Pile Section				
Yacht/Sailboat	150	400	10	14.4
Shelley Foss (Tug)	600	450	10	8.1
Foss BMC 30 (Barge w/Tug)	2600	450	10	3.9
Crowley 400 (Barge w/Tug)	12000	400	10	1.6
Maximum Size at Speed Limit	631	400	10	7
Impact with Battered Pile Section				
Yacht/Sailboat	150	300	45	2.6
Shelley Foss (Tug)	600	300	30	1.9
Foss BMC 30 (Barge w/Tug)	2600	300	30	0.9
Crowley 400 (Barge w/Tug)	12000	300	30	0.4
Maximum Size at Speed Limit	43	300	30	7

Table 03
Pier Protection Elastic Vessel Collision Capacity

Based on the result of this study and discussions with King County in May of 2007, the design for the critical section of the pier protection adjacent to the bascule piers was further analyzed for two design criteria: a single tugboat traveling at 7 knots, and a tug with a Foss BMC 30 barge traveling at 4 knots. Both vessels are assumed to impact the pier protection parallel to the

waterway at an angle of 10 degrees. The combination of the tug and barge traveling at 4 knots was a more onerous design criterion than the tug alone traveling at 7 knots. The battered fender sections have been designed to a lesser resistance because they are further away from the piers and the deflection is not as critical. A preliminary calculation showed that plastic deformation of the proposed fender system would dissipate the kinetic energy of the combined tug and barge before they impact the bascule pier. A more detailed analysis will need to be conducted in the final design phase.

12.0 Construction

12.1 Construction Overview

Project construction will require clearing, grubbing, grading, and filling along the proposed and existing bridge alignments. It will also require ground improvement under the existing bascule piers and at various locations on both shores. The initial activities of the proposed bridge construction will establish a construction staging area (see Volume 2, Sheet 52) and mobilize construction equipment to the project site. The construction of the new movable bridge and approaches, as well as removal of the existing bridge, will require a number of temporary structures. These include four construction trestles/work platforms (two on the west side of the proposed bridge – see Sheet 52, Volume 2; two on the east side of the existing bridge-see Sheet 57 Volume 2) construction cofferdams, a temporary access road, and a temporary access easement from the Boeing Company on the north side of the proposed bridge.

Construction of the proposed bridge will have permanent and temporary impacts on the Duwamish Waterway within the project area. Given the nature of the site, a number of environmental controls are necessary to minimize contamination and adverse impacts to aquatic habitat and affected species. The following is a general description of the construction process for the proposed bascule bridge.

12.2 Construction Constraints

12.2.1 Environmental Constraints

Hazardous Materials

The Draft Environmental Impact Statement[10] prepared for the South Park Bridge Project indicates that there are a several contaminated sites within the project area. In particular, the Boeing Plant 2 and the Lower Duwamish Waterway Superfund Site were identified as substantially contaminated areas. Furthermore, several properties in the vicinity of the south approach were identified as having a high probability of being contaminated due either to previous industrial operations carried out on the sites or to the presence of asbestos containing materials (ACMs) and lead-based paint (LBP). The known industrial contaminates present at various locations include Polycyclic Aromatic Hydrocarbons (PAH), Polychlorinated Biphenyls (PCB), Volatile Organic Compounds (VOC), semi-VOCs (SVOC), petroleum hydrocarbons, tributyltin, metals, chlorinated solvents, and chromic acid. In addition to the known contaminates present, a reasonable probability exists that buried containers of contaminated material may be uncovered during construction.

It is anticipated that the contractor will encounter contaminated materials during foundation excavation activities and during excavation and regrading

activities on both north and south shores. Preliminary study conducted for the DEIS hazardous materials investigation[14] indicated that the upper 15 to 20 feet of sediment in the river is contaminated to some extent. Prior to the start of work, the Contractor will develop and implement a Hazardous Materials Handling Plan. At a minimum, the plan will address the following:

- Excavation controls to prevent spillage of hazardous materials
- Plan for removal and proper disposal of hazardous materials expected to be encountered
- Contaminated sediment disturbance controls in the Duwamish Waterway
- Plan for removal and proper disposal of unanticipated contamination pockets (e.g., buried containers)
- Control of worker health and safety risk during demolition operations and excavation and transportation of hazardous materials
- Plan for construction schedule impacts due to the presence of unknown contamination pockets
- Testing, treatment, and control of contaminated dewatering effluent
- Appropriate measures to protect workers and public health from potential exposure to hazardous materials

In addition to the contaminated soils and groundwater known to be present, the water in the Duwamish Waterway is known to be contaminated. As a preliminary design step based on available data, only minimum water treatment has been specified in the water quality wet vaults. At the final design phase, Total Daily Maximum Load (TDML) requirements will have to be checked and additional water treatment controls may be necessary.

In Water Work Window

The project area is within a designated critical habitat area for chinook salmon, steelhead and bull trout per announcements in the *Federal Register* by National Oceanic & Atmospheric Association (NOAA) Fisheries and the U.S. Fish and Wildlife Service. In-water work is limited by the potential presence of the listed protected species as well as other species. In particular, King County will be required to meet the requirements for avoiding and minimizing impacts to aquatic habitat and species of concern pursuant to both the ESA Section 7 consultation process and other applicable permit conditions.

As of the writing of this report, the window allotted for in-water construction has preliminarily been defined as extending from August 1 to February 15 of each year. This window is a preliminary determination that has been arrived at through discussions with King County, the U.S. Fish and Wildlife Service (USFWS), the National Marine Fisheries Service (NMFS), and the Washington Department of Fish and Wildlife (WDFW).

In-water work is considered to be construction of the cofferdam, and pile driving outside the cofferdam. Excavation and other work within the cofferdam is not considered to be subject to the general restrictions of the in-water work window.

Noise and Vibration

The north and south bascule and north intermediate piers of the existing bridge are the major structures on the project that are anticipated to be adversely affected by vibration from construction activity. All other structures that might be susceptible to vibration damage, such as the south intermediate pier and north abutment of the existing bridge, are far enough from vibration sources that damage is not anticipated. Additionally, shaft casings, pilings and cofferdams will not be permitted to be installed using vibratory hammers within 40 feet of the existing piers, as per the geotechnical engineers' recommendation[12]. Vibration and tilt monitoring equipment will be installed on the existing footing. Due to the deteriorating condition of the existing piers, vibration transmitted to the existing piers shall be limited to 0.5 inches per second.

Noise receptors near the current bridge area to at least S. Cloverdale Street would experience temporary noise impacts during construction. It is not considered feasible to construct permanent noise barriers in most locations.

Construction noise could be reduced by using enclosures or walls to surround noisy equipment, installing mufflers on engines, substituting quieter equipment or construction methods, minimizing operation time, and locating equipment farther from sensitive receptors. To reduce construction noise at nearby receptors, the following mitigation measures could be incorporated into construction plans and contractor specifications:

- Limiting construction activities to daytime shifts only would reduce construction noise levels during sensitive nighttime hours, but could significantly impact the construction schedule if critical work is not able to be completed during the in-water work windows
- Equipping construction equipment engines with adequate mufflers, intake silencers, and engine enclosures as well as specifying the most quiet equipment available would reduce their noise by 5 to 10 dBA (U.S. EPA, 1971)
- Requiring contractors to use Occupational Safety and Health Administration (OSHA)-approved ambient sound-level sensing backup alarms would reduce disturbances to nearby residents from backup alarms during less noisy periods
- Turning off construction equipment during prolonged periods of non-use would eliminate noise from construction equipment during those periods

- Requiring contractors to maintain all equipment and train their equipment operators would reduce noise levels and increase operational efficiency
- Locating stationary equipment away from receiving properties would decrease noise from that equipment in relation to the increased distance
- Constructing temporary noise barriers around stationary equipment that must be located close to residences would decrease noise levels at nearby sensitive receptors

Refer to the South Park Bridge Draft EIS[10] for a more detailed description of noise and vibration constraints on this project.

12.2.2 Site Constraints

The U.S. Coast Guard requires a clear channel to maintain river traffic during construction. The result of preliminary discussion in September of 2006 between King County and the Coast Guard is that it could potentially be acceptable for up to half of the channel to be blocked at any one time during construction by a construction barge. The Coast Guard would give the contractor a few hours warning if the barge needs to be moved and the full navigation channel opened for an exceptional large vessel that requires the entire channel. Full channel closures for up to a week could be arranged on a case-by-case basis. A more firm agreement must be reached with the Coast Guard at the final design phase.

12.3 Environmental Controls

As with any project being carried out near a waterway, special measures need to be taken to ensure that construction does not adversely affect the surrounding environment. Primarily this project is concerned with preventing and controlling potentially hazardous material spills into the Duwamish Waterway and preventing erosion and sediment deposits from entering the waterway.

12.3.1 Temporary Erosion and Sedimentation Controls

Prior to starting construction, temporary erosion and sedimentation controls will be installed in accordance with the *King County Surface Water Management Manual, 2005 Edition,* as supplemented by the *Department of Ecology's Stormwater Management Manual for Western Washington, 2005 Edition.*

12.3.2 Spill Prevention, Control, and Countermeasures Plan

Prior to the start of work, the Contractor will develop and implement a Spill Prevention, Control, and Countermeasures (SPCC) Plan in accordance with WSDOT Standard Specification #1-07.15(1). At a minimum, the plan will address the following:

- Site information and project description
- Spill prevention and containment plan
- Spill response plan
- Standby, on-site material and equipment requirements
- Reporting information
- Program management
- Plans to contain preexisting contamination (the use of sand caps to prevent contaminated sediment disturbance has been discussed)
- Equipment used for work below the Mean High Water line
- A site plan and Spill and Incident Report Forms

All pollutants will be handled in a manner that will not contaminate surface water or the Duwamish Waterway. No maintenance or fueling of construction equipment or vehicles will be allowed within 200 feet of the Duwamish Waterway without prior approval. Materials that modify pH, such as cement, cement grindings, and cement saw cutting, will be managed so that they will not contaminate surface-water runoff or otherwise enter the Duwamish Waterway.

12.3.3 Erosion and Sedimentation Control Features

The Contractor will also be required to prepare an erosion control plan which, at a minimum, will include the following 12 components:

- Mark clearing limits
- Establish construction access
- Flow rate control plan
- Sediment control plan
- Soil stabilization plan
- Slope protection plan
- Drain inlet protection plan
- Channel and outlet stabilization plan
- Pollutant control plan
- Dewatering control plan
- Maintain best management practices
- Manage the project

As part of the Erosion and Sedimentation Control Plan, the Contractor will install erosion and sedimentation control features consisting of the most appropriate Best Management Practices (BMPs) including, but not limited to, the following:

<u>Sediment Source Controls</u>

- Stabilized construction entrance
- Temporary mulching and seeding
- Erosion control mats and blankets as required
- Dust control
- Materials on hand for erosion and sediment control
- Concrete handling
- Saw cutting and surfacing pollution prevention
- Material delivery, storage and containment
- Project scheduling

Runoff Conveyance and Treatment of Eroded Soils

- Pipe slope drains
- Check dams
- Triangular silt dike (geotextile-encased check dam)
- Outlet protection
- Storm drain inlet protection (inserts and excerpts)
- Straw wattles
- Silt fence
- Compost filter berm
- Sediment trap/water quality vault

The Contractor will be required to have a DOE-certified Construction Erosion and Sediment Control Lead (CESCL) present to supervise the project whenever work is being performed that could result in the release of turbid water. If conditions warrant, additional erosion and sediment controls may be required.

12.3.4 Stormwater Treatment Facilities

The Contractor will be required to install water quality vaults near each of the bridge approaches as the first order of business which will be used as sedimentation ponds to control erosion and runoff into the Duwamish Waterway during construction. Runoff from the new bridge will be routed into these water quality vaults. All vaults will be cleaned prior to project acceptance. Water quality wet vaults will be designed in accordance with Section 6.4.2 of the 2005 KCSWDM.

12.4 Construction Sequence and Details

12.4.1 General Project Timing, Sequence, and Traffic Impact

Construction and demolition activities are expected to occur over a 34-month period (see Appendix E - *Construction Schedule*). The proposed sequence is a feasible method for completing the project within the applied constraints. The appointed contractor is free to develop its own preferred schedule provided that it accommodates the construction constraints and environmental controls outlined above. Nighttime work may be required to complete in-water work within the mandated window. The actual constraints regarding nighttime work will be negotiated as necessary at a future date.

The proposed bascule bridge would be built directly adjacent to the existing bridge for the purpose of keeping the existing bridge in operation while the new bridge is being constructed. Therefore, no major bridge closures are expected. However, routine disruptions to traffic and parking will occur due to the presence of construction on the project site and the changeover period necessary to divert traffic from the old bridge to the new bridge.

12.4.2 Ground Improvements

Ground improvements will occur in the first stage of construction in concurrence with the utility relocation activities.

Compaction Grouting Below Existing Piers

The timber piles supporting the existing North Bascule Pier were driven into a deep and relatively soft layer of soil. Some of the pile tips never reached the underlying competent bearing soils. This has caused settlement of the North Bascule Pier. Despite the fact that most of the existing timber piles were driven into relatively competent bearing soils under the South Bascule Pier, it also exhibits cracking and settlement problems. Due to the proximity of the new pier construction to the existing piers, precautions must be taken to ensure that the new construction does not disturb the existing bridge piers.

Stone columns, compaction grouting, and other methods were evaluated in the *Foundation Design Report North Pier* dated October 1991 by Sverdrup[1]. Based on the analysis in this report, the geotechnical report prepared by Shannon and Wilson[3], and discussions with a local contractor versed in compaction grouting, it has been concluded that using compaction grouting to improve soil at the existing bascule pier foundations will help to minimize pier settlement during construction of the new bridge. During the compaction grouting process, a 4-inch-diameter pipe will be installed in the underlying soils at various locations around the two piers. Cement grout will be injected through this pipe under high pressure into the gap between the competent soil layer and tips of the existing timber piles.

This work will be performed from a floating barge that will be positioned in various areas around the piers to inject the grout. The compaction grout will

be injected at elevations between the competent glacial soils and the mudline and is not anticipated to create vibrations or otherwise disturb the mud in the riverbed.

Compaction grouting will have to be limited and well controlled in close proximity to the new foundation footings to ensure that the grout column does not interfere with construction of the cofferdam and drilled shafts. Test piles may be driven before construction to determine the effects of pile driving on the existing bridge and to further research the need for compaction grouting.

Earthquake Drains

Ground improvements will also be made on both riverbanks. These improvements involve installing 4-inch to 8-inch-diameter perforated drain pipes to an elevation of -20 feet NAVD88. The drains are typically installed by vibrating a tubular steel mandrel containing the drain into the soil to the required depth and then retracting the mandrel, leaving the drain in place. Drains will be placed at 3 feet to 5 feet center-to-center spacing in a triangular layout over approximately 21,000 square feet on each side of the river. The drain pattern will be curtailed in the area surrounding abutments and piers. There should be a 3-5 foot space between the face of a pier or abutment and the closest drain. A free draining gravel layer will be required to overlay the drain pipe heads which will be capped with a geotextile to prevent fine soil from infiltrating and clogging the gravel layer. A minimum of 2 feet of fill should be placed above the geotextile before allowing construction traffic to operate over the improved area. These drains will mitigate the potential for liquefaction in the area by allowing excess pore-water pressure to be relieved during a seismic event. This is achieved by providing a pathway for water to flow up the drains and into the gravel layer. Relieving excess pore pressure will help to maintain the shear strength of the potentially liquefiable soil during a seismic event. A schematic drawing of the earthquake drain system is shown in Figure 11. Refer to Sheet 52 in Volume 2 - *Preliminary Design Plans,* for the approximate location and extent of the area of ground improvement with earthquake drains.

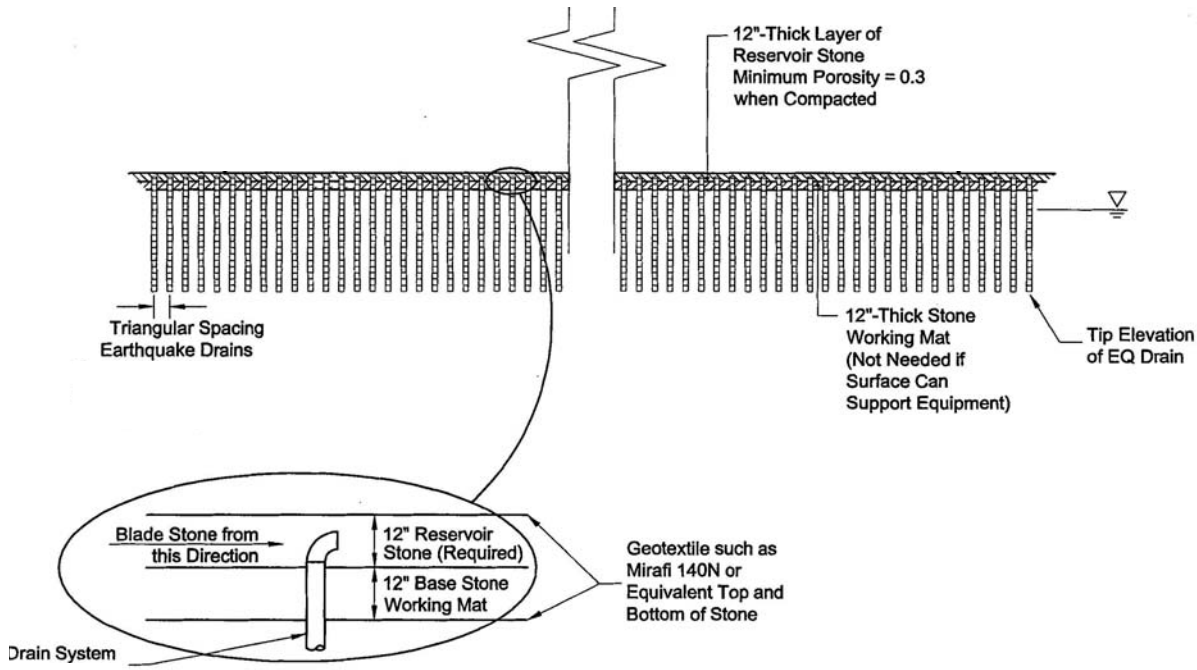

Figure 11
Earthquake drain schematic

12.4.3 Utility Relocation

The proposed underground utility relocation work will be coordinated with the proposed soil-improvement efforts to avoid conflicts. The earthquake drain pattern will be curtailed to avoid utilities that cannot conveniently be relocated.

12.4.4 Construction of Working Trestles

For the construction of the new bridge, it is expected that two, T-shaped working trestles, similar in size, will be required to support equipment and material during construction. Driven 24-inch-diameter steel piles as well as several 16-inch diameter battered steel piles will support the working trestles. Preliminary calculations indicate that the south side trestle requires 78 piles, approximately 62 of which will be in the water. The slightly larger north side trestle requires 81 piles, approximately 74 of which will be in the water. If timber piles are used in the trestle construction, roughly eight times as many timber piles would be required due to the large crane(s) loads anticipated. The maximum depth of the trestle steel piles will be approximately 100 feet below the mudline (see Volume 2, Sheets 52 and 53, for additional details).

In addition to the T-shaped work trestle, a drill platform will be erected over each of the cofferdams once they are in place to support the shaft drilling equipment. The drill platform will be approximately 56 feet by 76 feet and

supported by an additional 12 driven, 24-inch steel pipe piles. The platform will include removable blockouts to allow access to the shaft locations.

The existing timber pier protection adjacent to the north and south main piers will need to be partially removed via barge-mounted equipment on the west (downstream) side of the bridge. Removal of the protection piers and construction of the working trestles for the new bridge may overlap to save time. Refer to Appendix E – *Construction Schedule* for the estimated time for removal of the existing pier protection and for construction of the working trestle.

12.4.5 Construction of New Main Piers

Pier construction sequence:

1) Install cofferdams to enclose the area of new pier construction
2) Excavate within the cofferdams to the bottom of concrete bascule seal elevation
3) Install temporary piles and build drill platform 2 feet above the top of the cofferdam
4) Install 8-foot-diameter shaft casings to elevation -150 feet. Leave the top of casing level with the top of the cofferdam and pour shaft concrete
5) Pour foundation seal, dewater cofferdam, and cut casings at 1 foot above seal level
6) Construct pier footing and bascule piers

(Refer to Volume 2, Sheet 53 for details)

Cofferdam and Drill Platform

For construction of the new bascule piers and their foundations, two cofferdams will be constructed. Steel sheet piles for each 92-foot-by-64-foot cofferdam will be installed approximately 30 to 50 feet below the mudline. The hydrostatic pressure difference between the outside and inside of the cofferdams will minimize the transmission of water from inside the cofferdam to the Duwamish Waterway. After the cofferdams are in place, the soil inside the cofferdam will be excavated to elevation -8.95, up to 5 feet below the existing mudline.

A potential cofferdam construction technique that has been considered by the design team is the use of press-in sheet piles. Using this technique, a small number of piles are driven into the ground. These piles are then used as reaction piles for a crawling hydraulic pile installation machine that pushes the next pile in the sequence into the ground before moving forward to the next location. The advantage of this technique is that it eliminates much of the noise and vibration associated with percussive pile driving methods and

could be installed outside of the in-water work window. For more details, refer to the manufacturer's website[13]. If this is not feasible, sheets will be driven and not vibrated into position.

After the excavation is complete, temporary steel pipe piles will be driven inside the cofferdam at locations that avoid the final shaft locations. These temporary piles will support a platform from which the drill rig can operate to install the drilled shafts. The working platform will have to clear the top of the cofferdam (see Volume 2, Sheet 53 and 55 for details of the cofferdam and drill platform). This work is considered "in-water" work.

Bascule Pier Deep Foundations

Four types of foundation alternatives for the main piers have been explored:

1) Drilled concrete shafts can be installed using a hydraulic oscillator that places a steel casing in the soil by simultaneously pushing downward and twisting the steel casing. After the full depth of steel casing has been pushed into the soil, the soil within the casing is removed, a large steel reinforcing bar cage is inserted into the hole, and the hole is filled with concrete as the steel casing is pulled out.

   This method typically requires four support piles to be driven around each casing to support the oscillator equipment. With at least 16 concrete shafts required per pier foundation, even with some casings sharing work piles, it is estimated that at least 40 high capacity 24-inch-diameter piles will need to be driven just to prepare for the shaft installation sequence.

2) Drilled concrete shafts can also be installed using a vibratory hammer or even without the vibration. The vibratory hammer drives a steel casing into the soil by imparting impulsive forces in rapid succession (typically 30 Hz). The impulsive forces are generated by eccentrically mounted rotating weights within the vibration hammer. Although this casing installation method is louder and causes more vibration than the oscillator method for installing drilled shafts, it provides an alternative method for installing drilled shafts where the use of an oscillator might not be appropriate. Using appropriate means and methods, sections of the 1¾-inch-thick casing would be welded together until the required -130 foot elevation is reached. The required pile tip elevation is -150 feet. The remaining 20 feet can be excavated using either a cased or slurry method. Once the desired depth is reached, soil within the casing is removed, a large steel reinforcing bar cage is inserted into the casing, and the casing is filled with concrete. The casing would be left in place, as it is required to develop sufficient bending capacity during a seismic event.

3) Closed-end piles are a common foundation choice, having more end-bearing capacity than open-end piles. Both precast concrete piles and closed-end steel piles were considered, the former because they can be driven quickly and less noisily. However, soil conditions at the

bridge site are not conducive to this type of pile since closed-end piles would only penetrate into the glacial soils approximately 5 feet. This limited penetration is not sufficient to support the bridge under seismic loading.

4) Steel piles with conical tips can be driven a sufficient depth into the glacial till to withstand seismic loading. Approximately three to four piles can be driven each day. After a steel pile with conical tip is driven to the desired depth, a steel reinforcing bar cage is inserted and concrete is poured into the pile. Another advantage of a conical-tipped pile is that driving such a pile delivers less vibration to the surrounding area than a typical flat closed-end pile. Limiting vibration is a significant concern, as the main piers on the existing bridge are unstable and susceptible to vibration-induced settlement. Due to the soil conditions at the bridge site, the vibration delivered to the adjacent existing bridge, and the short construction window, driven 24-inch-diameter steel piles with conical tips are the preferred pile type for this project in comparison to open or typical closed end piles. Twenty-four inch piles were selected for analysis since driving them transmits far less vibration to the adjacent bridge than driving 36-inch piles. To further reduce the impact of noise in the waterway, a hydraulic hammer could be used rather than a diesel hammerhead which creates twice as much noise. A bubble curtain could also be installed around the inside perimeter of the cofferdam. This additionally reduces any pile-driving noise that may emanate from the inside of the cofferdam during construction.

Because of the inability of 24-inch steel-pipe piles in Options 3 and 4 to withstand the forces generated during a seismic event, drilled shafts are most appropriate. Installed with proper means and methods, they are the most feasibly constructible foundation option that delivers sufficient structural capacity (refer to Appendix E – *Construction Schedule* for the estimated duration of drilled shaft installation).

Two drilled shaft installation rigs are assumed. It is estimated that the necessary drill rig is approximately 100 tons and has a footprint of 16 feet by 20 feet. It is estimated that a 200-ton crane is required to lift the casings into place. Material that is excavated from the shafts will be hauled offsite and disposed of at an approved receiving facility. Some of this material is expected to contain hazardous chemicals and will have to be controlled appropriately.

In response to concerns about the susceptibility of the existing bridge footings to vibration-induced settlement, the four drilled shaft casings on the south bascule pier, and the two casings on the north bascule pier immediately adjacent to the existing footings will have to be pushed and/or twisted into the soil rather than installed by vibratory hammer. Typically, this is achieved by continuous excavation of the soil inside the casing while it is

pushed in. Instrumentation will be required on the existing footings to monitor tilt, displacement, crack openings, and received vibration level.

Bascule Pier Foundation and Pier Construction

Upon completion of shaft installation, the drill platform will be dismantled and the temporary piles supporting it will be removed. When the area inside the cofferdam is free of obstructions, the footing seal will be cast using a tremie pour. This will prevent infiltration of water into the cofferdam from the river. Using pumps, a clean, dry work surface can be created against which to cast the footing. The 8-foot-diameter casings will be cut off approximately 1 foot above the top of the seal. The concrete shafts will be chipped level with the top of the casing and prepared for the footing pour. Construction of the main pier footings and the bascule towers will follow completion of the concrete seal (see Volume 2, Sheets 53 to 55, for details).

12.4.6 Approach Span Piers and Abutments

The approach span piers and abutments are supported on 10-foot and 6-foot drilled shafts. No footings will be used in order to minimize the amount of potentially hazardous material that is excavated. All piers and abutments will be constructed over dry land and are to be constructed concurrently with the bascule piers (see Appendix E – *Construction Schedule* for schedule details). Material, some of which may be hazardous, that is excavated from the shafts will be hauled offsite and disposed of at an approved receiving facility. These shafts can be installed by any manner that the contractor chooses; construction is not limited by vibration concerns at the bascule pier or by the fishery window. However, vibration transmitted to adjacent buildings may limit the construction methods available.

12.4.7 Bridge Girders and Decks

At least one, and perhaps two, barge-mounted cranes will be needed during the erection of the movable leaf trusses and counterweight. The steel grating for the exodermic deck system will be installed directly on the trusses first. Then, the concrete topping slab will be cast in place (refer to Appendix E – *Construction Schedule* for the estimated duration).

The precast, prestressed concrete girders for the approach spans will be erected from the construction trestles and the shore. The forming of the new concrete bridge deck on the approach spans will not require any special construction methods. Construction activities for this phase of work will be either staged from the newly placed approach span girders or from cranes staged on the work trestle. The temporary work trestle may be used to transport supplies such as formwork, rebar, and concrete. The contractor will be required to install debris containment below the approach spans to prevent material from falling into the water during construction.

12.4.8 Removal of Cofferdam and Temporary Construction Trestle

Once the main piers are above the water level, the contractor will remove both of the cofferdams. The construction trestles, including the steel pipe piles, will be removed when they are no longer necessary and stored for reuse for the temporary construction trestle used for the existing bridge removal.

12.4.9 Partial Pier Protection

A partial pier protection system for the new bridge will be built once the cofferdam has been removed. These fenders will protect the new piers from errant vessels in the navigational channel. The remainder of the pier protection will be completed once the existing bridge is demolished and removed.

A barge-mounted crane will be used to extract the existing fender piles and to install the new piles. Floating booms will be used to contain any debris that could enter the water.

12.4.10 Shoreline Improvements

Existing riprap, rocks, and debris along both shorelines will likely be removed within the project vicinity. Cleanup will be required before stabilizing materials will be installed on the embankment. A wharf, consisting of a concrete deck on timber piling, approximately 320 feet by 40 feet as shown in Volume 2, Sheet 53 is on the northwest shore of the project and supports various utilities. Coordination with the Boeing Company will be necessary to relocate utilities within the wharf area on the. Also, a portion of the wharf on Boeing property will likely be removed.

12.4.11 Submarine Cable Connection

A new submarine duct casing will be used for inner-duct conduits carrying electrical power and a control cable between the two bascule piers. It will be installed under the waterway using directional boring. The operation of the directional bore equipment will be from the shore above the Mean High Water line. This construction method will require excavation of two pits, one on each side of the waterway. The pit on one side will be approximately 10 feet long by 4 feet wide and 5 feet deep. The pit on the opposite side will be approximately 5 feet long by 4 feet wide and 4 feet deep. The pits will be completed with appropriately sized electrical pull boxes and terminal boxes. The directional bore will install the 10-inch-diameter casing pipe below the bottom of the waterway. The actual depth of the bore below the mudline will be determined by the drilling contractor based on the soil profile to avoid the bore blowing out into the waterway. No in-water construction activities will be required. The location of each pit will be determined in the final design phase.

12.4.12 Construction of Approaches and Roadway Work

Once the site of the new bridge has been cleared, the roadway approaches will be constructed in two segments: south and north.

Significant regrading and a special construction staging plan will be required to complete the Dallas Street and Sullivan Street intersection and tie the new Dallas Street and 14th Avenue S. intersection into the existing 14th Avenue S. The Dallas and 14th Avenue S. intersection is proposed to be approximately 5 feet above the existing grade at the north end of the intersection (Station 16+80) and rejoins the existing grade south of the intersection at approximately Station 15+00. To support the elevated approach and new intersection, the contractor will have to alternate construction between the northbound and southbound lanes, and some weekend bridge closures may be expected.

On the north side of the river, similar staging measures will be required to tie the new, higher roadway into the existing approach. Boeing uses the existing north approach span as an underpass to transport goods between its facilities. During the final design phase, King County will have to reach an agreement with Boeing regarding its requirements for an access road under the north approach span during construction.

The new approaches will be constructed at a 5% grade or less to align the design with ADA standards for accessibility. The approaches will be contained by a combination of Mechanically Stabilized Earth (MSE) walls and a concrete abutment. MSE walls provide cost effective, lightweight construction with the ability to accommodate significant ground movement during a seismic event.

12.4.13 Removal of Existing Bridge

After traffic has been routed to the new bridge, the existing bridge will be closed for demolition. The existing movable spans will be left in the open position.

The contractor will build temporary construction trestles on the upriver side of the existing bridge adjacent to both the north and south portions of the bridge preferably using materials salvaged from the construction trestle for the new bridge. This will occur during the time allotted by the Washington Department of Fish and Wildlife for construction in the waterway. The construction trestle on each side will be approximately 24 feet wide by 120 feet long, 32 feet wide by 100 feet long, and 32 feet wide by 80 feet long with seventy-six 24-inch-diameter steel pipe piles (see Volume 2, Sheets 56 to 59, for details).

Before removal of the existing bascule piers begins, the remaining upriver portion of the existing fender system will be removed to allow construction access from a barge. The remaining portion of the new fenders will be

completed as one of the last activities in the construction process after the existing bridge is removed.

Barge-mounted equipment and equipment on the temporary construction trestles will be used to remove sections of the existing bridge. Containment will be installed below the bridge spans to prevent water contamination. One or two temporary bents may need to be installed under each of the four approach trusses to facilitate removal of the steel sections. The bents, consisting of driven steel pipe piles would be installed under the half or third points of each truss. If possible, the south approach pier could be removed during low tide while the area is dry. The contractor will install cofferdams around each of the existing main piers and intermediate piers (five in total). Cofferdam installation from a barge can begin concurrent with trestle construction, but the approach spans will most likely have to be removed before the cofferdam can be completed. The contractor will then remove the main piers and their foundations to approximately 3 feet below the mudline.

Following this work, the construction trestle and cofferdams will be removed, including any temporary steel pipe piles.

Land under the existing south approach will be regraded to form an embankment above the new waterfront access road. Land under the existing north approach will be made level with the existing grade at the Boeing facilities.

13.0 Aesthetic Considerations

The project team, at the request of the South Park community, has endeavored to design a new bridge that maintains the character of the existing structure while still developing a structurally robust and cost-effective design. The bascule leaves and control towers will be similar to those of the existing structure. The main leaf trusses will incorporate a plate girder element at their tip to mimic the existing structure. The piers and control towers will use similar materials and finishes as the existing elements, with functional improvements such as more windows to increase visibility and comfort for the bridge operators. Although the proposed pier protection system is not anticipated to be a timber structure like the existing protection system, the new structure will formally resemble the existing one.

The approach span trusses will be replaced by typical WSDOT prestressed girders. This is a departure from the existing steel trusses over the water. There is, however, a savings when comparing prestressed girders to steel trusses considering both fabrication and lifetime maintenance costs.

The existing on-shore approach spans use a large number of piers to support the approach span slabs. Using such a large number of piers would greatly increase the cost of the project and potentially require the disposal of potentially more hazardous material.

King County agreed that the primary efforts in preserving the historical character of the bridge should be focused on the bascule spans themselves, which are the major visual elements of the structure. Other architectural elements in the style of the existing structure will be incorporated into the design of bridge components such as the rails, lights, and control towers.

REFERENCES

14.0 References

1) *14th /16th Avenue South Bridge Foundation Design Report North Pier*, Sverdrup Corporation, October 1991.

2) *Evaluation of Deteriorated Bridge Structure*, Han-Padron Associates, March 15, 2001.

3) *Geotechnical Report, Phase II, South Park Bridge Project, King County, Washington*, Shannon & Wilson, Inc., March 2004. (Included in Volume 3)

4) *Movable Bridge Engineering*, Koglin, Terry L., John Wiley & Sons, Inc., New Jersey, 2003.

5) Revision of permit drawings submitted by King County to U.S. Coast Guard by King County, 2006.

6) *Historic Bridges and Tunnels in Washington State. National Register of Historic Places Inventory: Nomination Form*. Soderberg, L., On file at Washington State Office of Archaeology and Historic Preservation, file name: Thematic #2 Olympia, Washington. 1980.

7) *South Park Bridge Hydrographic Survey (300197)*, David Evans and Associates, Inc., July 2006.

8) *South Park Bridge Project Structural Alternative Study*, Parsons Brinckerhoff, Inc., November 2003.

9) *South Park Bridge Project Utilities Technical Report*, Rose Water Engineering, Inc., February 2004.

10) South *Park Bridge Project, Draft Environmental Impact Statement and Section 4(f) Evaluation*, King County Department of Transportation, August 2005.

11) *South Park Bridge Rehabilitation Feasibility Study*, Parsons Brinckerhoff, Inc., May 2003.

12) *Supplemental Geotechnical Report, Phase II, South Park Bridge Project, King County, Washington*, Shannon & Wilson, Inc., June 2007. (Included in Volume 3)

13) www.giken.com

14) *Technical Report, South Park Bridge Project Hazardous Materials*, Wilbur Consulting Inc., February 2004

Appendix A

Structural Design Criteria

King County

South Park Bascule Bridge Replacement

Structural Design Criteria

Version 2.0

1.0 INTRODUCTION

The Structural Design Criteria listed in this document serves as guidance for conceptual/preliminary design of the South Park Bascule Bridge Replacement. This conceptual/preliminary design is performed in support of the Final Environmental Impact Statement study, the Biological Assessment Report, and as a basis for project cost estimate.

These criteria establish design parameters for the development of bascule span structures, approach span structures, retaining walls, bascule pier protection structures, and miscellaneous structures. It is anticipated that these design criteria will be modified and updated as the design progresses. These criteria are also established as the basis to guide further design efforts for all of the structural components of the project under consideration.

2.0 CODES, STANDARDS, SPECIFICATIONS AND GUIDELINES

Applicable design codes, standards, specifications and guidelines listed below are to be used throughout the design process.

Where there are cases of special designs encountered that are not specifically covered by these criteria, the designer shall bring them to the attention of King County to determine the technical source for the design criteria to be used.

2.1 List of Codes, Standards, Specifications and Guidelines

All structures in this project shall be designed in the order of precedence shown in Section 2.2 and in accordance with the applicable portions of the codes, standards and specifications listed below, editions as cited.

- (AASHTO-MOV) LRFD Movable Highway Bridge Design Specifications, 2nd Edition (2007), published by the American Association of State Highway and Transportation Officials.

- (AASHTO-LRFD) LRFD Bridge Design Specifications, Fourth Edition (2007) published by the American Association of State Highway and Transportation Officials.

- (AASHTO-PED) Guide Specifications for Design of Pedestrian Bridges, 1st Edition (1997) published by the American Association of State Highway and Transportations Officials.

- (AASHTO-SUPP) Standard Specifications for Structural Supports for Highway Signs, Luminaries and Traffic Signals, 4th Edition, with 2002, 2003 and 2006 Interims, published by the American Association of State Highway and Transportation Officials.

- (AASHTO-BWC) Bridge Welding Code: AASHTO/AWS-D1.5M/D1.5: 2002, An American National standard, 4th Edition, with 2003 and 2005 Interims.

- (AASHTO-SEIS) Recommended LRFD Guidelines for the Seismic Design of Highway Bridges, 2006 Edition published by the American Association of State Highway and Transportation Officials.

- (ACI) Building Code Requirements for Structural Concrete with Commentary, ACI 318-05 published by the American Concrete Institute.

- (ADA) ADA Standards for Accessible Design, 1994 Edition published by of Department of Justice.

- (AISC) Steel Construction Manual , 13th Edition (2005) published by the American Institute of Steel Construction, Inc.

- (CAL-MARINE) Seismic Criteria For California Marine Oil Terminals, Volume 1, 1999 Edition published by Naval Facilities Engineering Service Center.

- (IBC) International Building Code, 2006 Edition, published by International Building Code Council, Inc.

- (KC-STD) King County Road and Construction Standards, 2007 Edition published by King County Department of Transportation.

- (PTM) PTI Post-Tensioning Manual, 6th Edition (2006) published by the Post-Tensioning Institute.

- (SEA-PLAN) City of Seattle Standard Plans for Municipal Construction, 2005 Edition published by Seattle Public Utilities.

- (SEA-SPECS) City of Seattle Standard Specifications for Road, Bridge, and Municipal Construction, 2005 Edition published by Seattle Public Utilities.

- (WA-ENERGY) Washington State Energy Code (Chapter 51-11 WAC), 2006 Edition published by Washington State Building Code Council.

- (WA-VENT) Washington State Ventilation and Indoor Air Quality Code (Chapter 51-13 WAC), 2006 Edition published by Washington State Building Code Council.

- (WSDOT-BDM) Bridge Design Manual LRFD (M23-50) with revisions up to February 26, 2007, published by Washington Department of Transportation.

- (WSDOT-SPECS) Standard Specifications for Road, Bridge, and Municipal Construction, 2006 Edition published by the Washington State Department of Transportation.

- (WSDOT-PLANS) Standard Plans for Road, Bridge, and Municipal Construction, published by the Washington State Department of Transportation.

- (WSDOT-GEOTECH) Geotechnical Design Manual (M46-03), 2006 Edition published by the Washington State Department of Transportation.

2.2 Applications of Codes, Standards, Specifications and Guidelines

The following project elements shall be designed using the edition of the codes listed. The tabulation of these codes has been arranged in order of precedence. If a conflict exists between the designated codes, the requirements of the first code shall apply, unless otherwise directed by King County.

A. Retaining Walls

1. WSDOT-BDM, SPECS & PLANS
2. AASHTO-LRFD

3. KC-STD
4. SEA-PLAN, SPECS
5. ACI, AISC

B. Bridge Approach Structures

1. WSDOT-BDM, SPECS & PLANS
2. AASHTO-LRFD
3. KC-STD
4. SEA-PLAN, SPECS
5. ACI, AISC
6. PCI, PTI

C. Bridge Bascule Span Structures

1. AASHTO-MOV
2. WSDOT-BDM, SPECS & PLANS
3. AASHTO-LRFD
4. KC-STD
5. SEA-PLAN, SPECS
6. ACI, AISC
7. PCI, PTI

D. Bridge Control Houses

1. AASHTO-MOV
2. WSDOT-BDM, SPECS & PLANS
3. AASHTO-LRFD
4. IBC
5. ACI, AISC

E. Miscellaneous Structures

1. WSDOT-BDM, SPECS & PLANS
2. AASHTO-LRFD
3. KC-STD
4. SEA-PLAN, SPECS
5. ACI, AISC

3.0 SOILS AND GEOTECHNICAL DATA

3.1 Geotechnical Design Criteria

A geotechnical consultant, Shannon & Wilson, Inc. of Seattle, Washington was engaged to explore the subsurface conditions, to perform laboratory testing, to describe the geology of the project area and to make recommendations regarding the geotechnical aspects of the project design and construction. Earth and hydrostatic pressures vary within the geographic location of the project. The geotechnical parameters that are required for structural design shall be determined by the designers through reference to geotechnical reports and by consultation with the Geotechnical Consultants based upon historical records and site-specific subsurface investigations.

3.2 Geotechnical Reports

Geotechnical input to Preliminary Engineering design shall be based upon the following available subsurface findings and recommendations:

- Geotechnical Report, Phase II, South Park Bridge Project, King County, Washington, dated March 30, 2004.
- Supplemental Geotechnical Report, Phase II, South Park Bridge Project, King County, Washington, dated June, 2007.

3.3 Ground Improvement

In support of the Conceptual/Preliminary Design and EIS process, the Geotechnical Consultant has issued geotechnical studies and recommendations for ground improvements to control the liquefiable soils along the alignment and mitigate the effects of lateral spreading that is expected to occur during the major earthquake event. Refer to the documents referenced in section 3.2 for the geotechnical seismic criteria and recommended ground improvements.

In general, the preliminary recommendations during Conceptual Design recommended ground improvement for the bridge piers under the approach spans, and along both south and north shores to prevent imposing large passive forces on the bridge substructure from lateral spreading and to provide a non-liquefied soil mass of improved strength around the pier foundations. Ground Improvement alternatives that have been discussed for this location included deep dynamic compaction, vibratory probe, vibro-replacement stone columns, compaction grouting, jet grouting, deep soil mixing; and earthquake drains. In the Geotechnical Reports referenced in section 3.2, the use of earthquake drains was the recommended ground improvement method along the shoreline and adjacent to the on land foundations; compaction grouting was the recommended method of soil improvement under the bascule pier foundation of the existing South Park Bridge.

3.4 Existing Bridge Movement

Traffic will be maintained at full capacity on the existing South Park Bridge while the replacement bridge is being built directly adjacent to the existing structure. In order to ensure that the existing bridge is safe and operable during construction, potential settlements and ground movements resulting from changes in the state of stress within the ground mass supporting the existing structure shall be evaluated. The final design shall recommend a procedure to monitor the movement of the existing bridge during the construction.

4.0 MEASUREMENT AND UNITS

- Contract Documents shall be presented in the English system of measurement.
- The plan dimensions are taken to be correct at 64°F.

5.0 MATERIALS

5.1 Classes of Concrete

	Minimum Class	Min. Design Strength (psi.)
Sidewalk, curb, gutter	Class 3000	3,000
Column, barrier, retaining wall, sign, signal and illumination bases	Class 4000	4,000
Drilled shaft, footing	Class 4000P	4,000
Bridge decks	Class 4000D	4,000
Precast prestressed concrete girder	Class 7000	7,000

5.2 Reinforcing Steel

Modulus of elasticity	29,000 ksi
Deformed steel bar	AASHTO M31 (ASTM A615), Grade 60 (60 ksi) Where ductility is to be assured or where welding is required: ASTM A 706

5.3 Prestress Reinforcing

Prestressing Strand	AASHTO M 203 (ASTM A416), Grade 270, low relaxation strand. Modulus of elasticity is 28,500 ksi
Prestressing bar	AASHTO M 275 (ASTM A722), Tensile strength 150 ksi. Modulus of elasticity is 30,000 ksi

5.4 Structural Steel

Modulus of elasticity	29,000 ksi
Secondary members	AASHTO M 270 Grade 36 (36 psi) or Grade 50 or 50W.
Main members	AASHTO M 270 Grade 50 or 50W (50 psi)

All structural steel shall be galvanized or painted per WSDOT Standard Specifications

5.5 Welds

Weld electrodes	Tables 4.1 and 4.2 of ANSI/AASHTO/AWS D1.5

5.6 Bolts

High strength bolts	AASHTO M164 (ASTM A 325), Galvanized in accordance with AASHTO M 232.

Bolted connections shall be friction type

	Design is based on Class B coating on fraying surfaces.
Anchor bolts	ASTM A 449, Galvanized Per ASTM A 143

5.7 Bearings and Expansion joints

Concrete	Temp. Range 0°F to +100°F
Steel	Temp. Range 0°F to +120°F. Assuming temperature at 64 °F when steel is fabricated
Center bearings at	50 °F.

6.0 DESIGN LOADS, LOAD FACTORS AND COMBINATIONS

6.1 Dead Loads

Use values in:

- WSDOT "Bridge Design Manual LRFD" (BDM, M23-50), Section 3.1.1.
- AASHTO "LRFD Bridge Design Specifications", Section 3.5,
- AASHTO, "LRFD Movable Highway Bridge Design Specifications", Section 2.4.1.1

6.2 Live Loads, Impact and Braking Force

According to:

- WSDOT "Bridge Design Manual LRFD" (BDM, M23-50), Section 3.1.2,
- AASHTO "LRFD Bridge Design Specifications", Section 3.6,
- AASHTO, "LRFD Movable Highway Bridge Design Specifications", Section 2.4.1.1 and 2.4.1.2.

6.3 Water Loads

According to AASHTO "LRFD Bridge Design Specifications", Section 3.7.

6.4 Wind Load

According to:

- WSDOT "Bridge Design Manual LRFD" (BDM, M23-50), Section 3.2.1.
- AASHTO "LRFD Bridge Design Specifications", Section 3.8.
- AASHTO, "LRFD Movable Highway Bridge Design Specifications", Section 2.4.1.3.

6.5 Ice Loads

According to:

- WSDOT "Bridge Design Manual LRFD" (BDM, M23-50), Section 3.1.4-A.
- AASHTO "LRFD Bridge Design Specifications", Section 3.9.
- AASHTO, "LRFD Movable Highway Bridge Design Specifications", Section 2.4.1.10.

6.6 Downdrag

According to:

- WSDOT "Bridge Design Manual LRFD" (BDM, M23-50), Section 3.1.4-B.
- Supplemental Geotechnical Report, Phase II, South Park Bridge Project, prepared by Shannon & Wilson, Inc. 2007

6.7 Earth Pressure

According to:

- AASHTO "LRFD Bridge Design Specifications", Section 3.11.
- Geotechnical Report, Phase II, South Park Bridge Project, King County Washington, prepared by Shannon & Wilson, Inc. 2004

- Supplemental Geotechnical Report, Phase II, South Park Bridge Project, prepared by Shannon & Wilson, Inc. 2007

6.8 Thermal Effects

Temperature Range:	According to WSDOT "Bridge Design Manual LRFD" (BDM, M23-50), Section 9.1.2 – B.
Concrete	Coefficient of Thermal Expansion: 5×10^{-6} °F Elastic Modulus of concrete column may be reduced by ½ for longitudinal analysis in thermal load case.
Steel	Coefficient of Thermal Expansion: 6.5×10^{-6} °F Assuming temperature at 64°F when steel is fabricated.

6.9 Vessel Collision

According to:

- AASHTO "LRFD Bridge Design Specifications", Section 3.14.
- AASHTO, "LRFD Movable Highway Bridge Design Specifications", Section 2.4.1.7.

6.10 Fatigue Limit State

According to:

- AASHTO "LRFD Bridge Design Specifications", Section 3.14.
- AASHTO, "LRFD Movable Highway Bridge Design Specifications", Section 2.4.1.7.

6.11 Load Factors and Combinations

According to:

- AASHTO "LRFD Bridge Design Specifications", Section 3.4.
- AASHTO, "LRFD Movable Highway Bridge Design Specifications", Section 2.4.2.

7.0 DEFLECTION LIMITS

AASHTO LRFD Section 2.5.2.6.2

8.0 SEISMIC DESIGN CRITERIA

8.1 Design Philosophy

Seismic design shall follow the philosophy of Performance Based Earthquake Engineering. A Design Life of 75 years per AASHTO is used to determine the seismic hazard probabilities.

8.2 Basis of Design

Among the design specifications and codes listed in Chapter 2, the following are the primary seismic design related design codes or specifications:

- WSDOT "Bridge Design Manual LRFD" (BDM, M23-50), with Revisions up to February 26, 2007.
- AASHTO "LRFD Bridge Design Specifications," 4th Edition, with 2007 Interim Revisions.
- AASHTO, "LRFD Movable Highway Bridge Design Specifications" 2nd Edition, with 2007.
- AASHTO, "Recommended LRFD Guidelines for the Seismic Design of Highway Bridges" Final Draft, 2006 Edition.

"Seismic Criteria for California Marine Oil Terminals" published by Naval Facilities Engineering Service Center will be used as reference as needed.

In general, the order of precedence of the design specifications shall be:

First:	Project Specific Design Criteria, this document,
Second:	WSDOT Design Specifications,
Third:	AASHTO Design Specifications,
Fourth:	Other Specifications.

Because AASHTO is in the process of updating the seismic design criteria, the requirements for seismic design among the above document are not consistent at this time. Should there be contradictions between any of these design codes, the contradictions should be evaluated individually.

The structures in this project shall be designed using two levels of design earthquakes. The two design level earthquakes are defined below:

Life Safety Level Design Earthquake: An upper level seismic event that has ground motions corresponding to a 5% probability of exceedance in 50 years (7.5% probability of exceedance in 75 years), or an approximate return period of 975 years.
Operational Level Design Earthquake: An lower level seismic event that has ground motions corresponding to 50% probability of exceedance in 75 years, or an approximate return period of 108 years. The use of the 108 year return period for the low level event was determined based on discussion among King County, SDOT and the Consultants.

8.3 Importance Category

The Importance Category of this proposed new South Park Bascule Bridge has been classified as "Essential", by King County and SDOT.

The definition of the Importance Category is according to AASHTO-MOV, Section 3.3.

8.4 Performance Criteria

A Performance Objective in seismic design provides a means of communicating risk and potential damage along with the necessary engineering information to develop designs consistent with the stated performance goals. The expected Service and Damage Levels are defined for each design earthquake in terms of a Performance Objective.

Criteria for Life Safety Level Design: For Life Safety Level Design, this project adopts the criteria of life safety performance objective defined in Section 3.2 of AASHTO "Recommended LRFD Guidelines for the Seismic Design of Highway Bridges".

"Life Safety for the Design Event infers that the bridge has a low probability of collapse but, may suffer significant damage and significant disruption to service. Partial or complete replacement may be required."

Significant Damage Level includes permanent offsets and damage consisting of: cracking, reinforcement yielding, major spalling of concrete, extensive yielding and local buckling of steel columns, global and local buckling of steel braces, and cracking in the deck slab at shear studs. Partial or complete replacement of columns may be required in some cases. For areas of the project where lateral spreading due to liquefaction may occur, significant inelastic deformation is permitted in the foundation.

Criteria for Operational Level Design: The Performance Objective at the Operational Level is based on the expected level of service that the structure is capable of providing and the amount of damage expected, after one of the Operational Level Design Earthquakes.

Operational Level Design means relative minor damage is expected to occur. Some visible signs of damage may be present. Minor inelastic response may occur, but post-earthquake damage is limited to narrow flexural cracking in concrete and the onset of yielding in steel. Permanent deformations are not apparent, and any repairs should be able to be made under non-emergency conditions with the exception of bascule span joints. Normal traffic crossing the bridge should be able to resume following an inspection and some necessary minor repairs.

8.5 Geotechnical Parameters

The design shall consider the potential geological hazards during earthquake event for both Life Safety Level and Operational Level Designs, based on WSDOT Geotechnical Design Manual, Section 6.1.1.1, and the Geotechnical Report and the Supplemental Geotechnical Report, prepare by Shannon and Wilson, Inc.

Potentially liquefiable soil thickness drawings for the conceptual design, conceptual recommendations for ground improvement to address lateral spreading, and recommended lateral pressures for the conceptual/preliminary design have been addressed in the above referenced geotechnical reports.

Ground Acceleration and Response Spectra

A site-specific seismic ground motion study for this project was performed by Shannon & Wilson Inc. in November 2006. Site-specific spectral response acceleration curves were developed and included in the supplemental geotechnical report referenced in section 3.2.

Horizontal response spectra for both Life Safety Level and Operational Level Designs were developed by the geotechnical engineers based on the spectral shape in the "Recommended LRFD Guidelines for the Seismic Design of Highway Bridges", 2006 Edition. These spectra are shown on the next page.

Vertical response spectra were developed by multiplying the horizontal spectra by a vertical-to-horizontal (V/H) spectral ratio. The ratios are for the earthquake consistent with 108 year and 975 year return period ground motions and were developed by Shannon and Wilson Inc. for the nearby Alaskan Way Viaduct & Seawall Replacement Project using published attenuation relationships.

The horizontal spectra developed based on Site Class E shape.

The shape of the 975-year spectrum (for Life Safety Level Design) was modified to envelope the response measured from the 2001 Nisqually Earthquake nearby on Harbor Island.

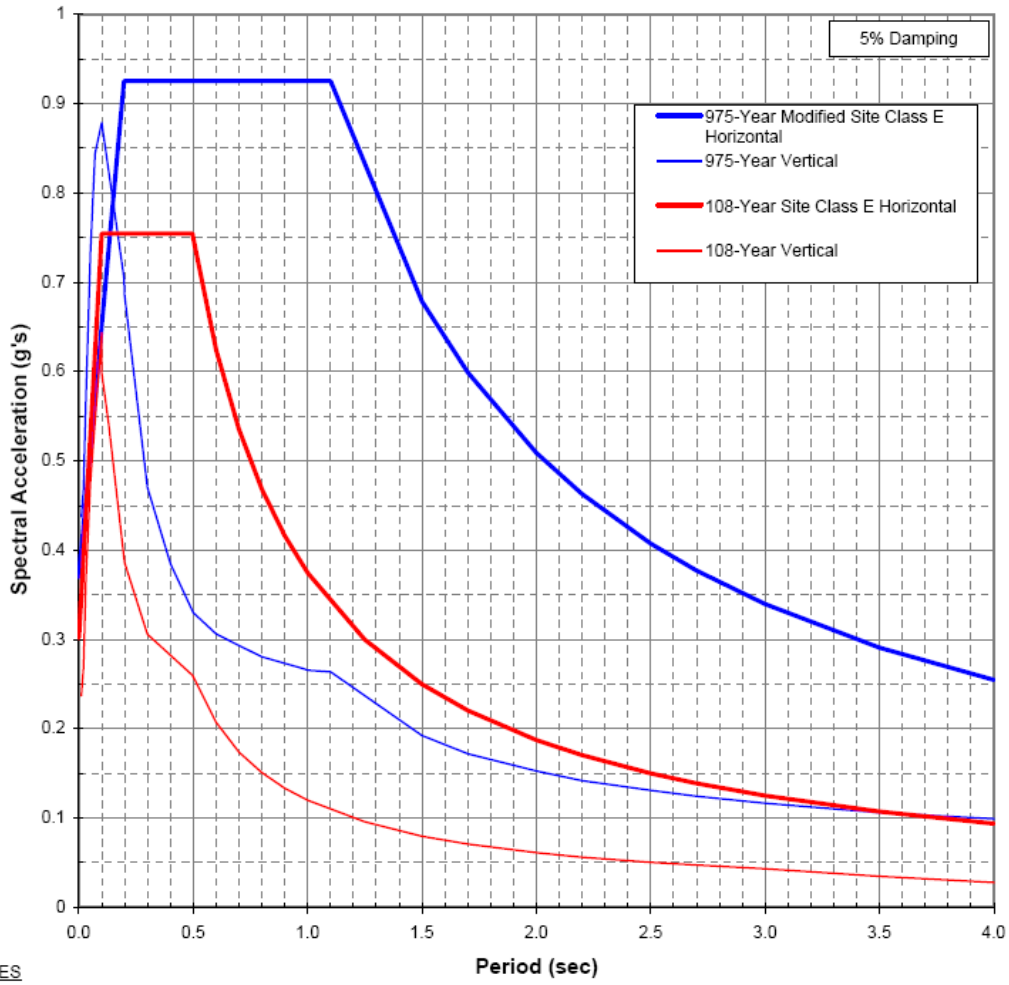

NOTES

1. Horizontal response spectra were developed based on the spectral shape in the "Recommended 2006 AASHTO LRFD Guidelines for the Seismic the Seismic Design of Highway Bridges." Ground motions specified by these guidelines are those with a 5% probability of exceedence in 50 years (975-yearreturn period). The 108-year spectrum used the spectral shape specified for the guidelines with S_S and S_1 values consistent with a 108-year return period.

2. The site average shear wave velocity is 627 feet per second (fps). Sites with average shear wave velocities greater than 600 fps are classified as "D"; sites with average shear wave velocity less than 600 fps are classified as "E." However, Site Class E spectra more closely approximate the results of ground response analyses performed at this site. Consequently, horizontal spectra are based on Site Class E shape. The shape of the 975-year spectrum was modified to envelope the response measured from the 2001 Nisqually Earthquake nearby on Harbor Island.

3. Vertical response spectra were developed by multiplying the horizontal spectra by a vertical-to-horizontal (V/H) spectral ratio. The ratios are for earthquake consistent with 108-year and 975-year return period ground motions and were developed for the nearby Alaskan Way Viaduct & Seawall Replacement Project using published attenuation relationships.

South Park Bridge

Seattle, Washington

975-YEAR AND 108-YEAR HORIZONTAL AND VERTICAL RESPONSE SPECTRA SITE CLASS E

November 2006 21-1-09584-010

SHANNON & WILSON, INC.
Geotechnical and Environmental Consultants

FIG. ____

Liquefaction

The influence of liquefaction on soil properties and foundation stiffness and restraint shall be considered. The effect of soil improvement on ground motion shall be evaluated by the Geotechnical Engineer and the design response spectra modified, as needed, to account for the effect on soil and foundation properties.

Liquefaction-induced lateral flow/spreading forces and peak structural response need not be considered concurrently. This has been decided through discussion with King County and the Geotechnical Consultant, and based on precedence in the "Alaskan Way Viaduct & Seawall Replacement Project Preliminary Engineering Design Criteria" (2005) Section A 2.7.

The impact of liquefaction-induced settlement and lateral movements shall be considered.

The design requirements of the "Recommended LRFD Guidelines for the Seismic Design of Highway Bridges", Section 6.8, shall be followed. Where liquefaction occurs, all structures shall be designed and analyzed in both a non-liquefied configuration and a liquefied configuration.

9.0 BASCULE SPAN STRUCTURES

9.1 General

This section is applicable for the design of bascule span structure, including the bascule piers that partially support the approach spans.

9.2 Seismic Design Category (SDC)

There are four Seismic Design Categories defined in the "Recommended LRFD Guidelines for the Seismic Design of Highway Bridges". With reference to the "975-year and 108-year Horizontal and Vertical Response Spectra" included in Chapter 8, this Structure Seismic Design Category shall be classified as SDC D.

9.3 Earthquake Resisting Systems (ERS)

"Permissible" systems as specified by the "Recommended LRFD Guidelines for the Seismic Design of Highway Bridges", where applicable, may be considered and allowed. "Permissible with Owner Approval" systems as specified by the "Recommended LRFD Guidelines for the Seismic Design of Highway Bridges" may be considered and allowed. These systems are defined in "Recommended LRFD Guidelines for the Seismic Design of Highway Bridges", Section 3.3.

Movable bridges are sensitive to distortions and misalignments. Consideration should be given to the amount of permissible deformation, in order to increase the probability of serviceability and reparability after a Life Safety Level Earthquake event.

9.4 Trunnion Supports

The bascule trunnion supports and their connections to the bascule piers shall be designed based on capacity design principles. If the design analysis indicates that the capacity design is not practical or too costly, then exception would be permitted to utilize seismic energy dissipation systems.

9.5 Bascule Span in Open Position

In accordance with AASHTO, "LRFD Movable Highway Bridge Design Specifications", Section 3.4.1, one half of the seismic loads due to the Life Safety Level Earthquake shall be used as the design force for the bascule span in the open position. Seismic loads resulting from Operational Level Earthquake should not be reduced.

9.6 Bascule Pier Foundation

For the drilled shafts under the bascule piers, during a Life Safety Level Earthquake event, some limited inelastic deformation is permitted. The amount of permissible deformations should be limited in order to increase the probability of serviceability and reparability after the earthquake event. Sacrificial elements may be incorporated in the design of the bascule superstructure in order to reduce the load on the pier foundations during a Life Safety Level Earthquake.

9.7 Live Load Effects

The inertia effects of live load should not be considered when conducting a dynamic response analysis. Only the gravity effects of the live load are considered for the seismic design.

Navigation Clearance Letter

Appendix B

DEPARTMENT OF THE ARMY
SEATTLE DISTRICT, CORPS OF ENGINEERS
P.O. BOX 3755
SEATTLE, WASHINGTON 98124-3755

REPLY TO
ATTENTION OF

November 21, 2006

Navigation Section

RECEIVED
NOV 27 2006
K.C. Roads Engineering Services

Mr. Tim Lane
King County Department of Transportation
201 South Jackson St.
Seattle, WA 98104

SUBJECT: Replacement of the 14th Avenue Bridge over the Duwamish Waterway.

Dear Mr. Lane:

This is in follow up to our meeting on April 25, 2006 to discuss replacement of the subject bridge. Organizations in attendance were the U. S. Army Corps of Engineers Seattle District; 13th United States Coast Guard District; Port of Seattle and King County Department of Transportation. At the meeting, you requested informal concurrence on a preliminary replacement design.

The preliminary design presented by King County with 125 feet of perpendicular, horizontal clearance between the fenders is satisfactory to accommodate current and projected future navigation use of the waterway.

A copy of this letter is being furnished to Commander, 13th U. S. Coast Guard District and Mr. Scott Pattison, Port of Seattle. If you have any questions, please contact me at (206) 764-3400 or email at thomas.j.szelest@usace.army.mil.

Sincerely,

Thomas J. Szelest
Chief, Navigation Section
Corps of Engineers

U.S. Department of Transportation
United States Coast Guard

Commander
Thirteenth Coast Guard District

915 Second Avenue
Seattle, WA 98174-1067
Staff Symbol: oan
Phone: (206) 220-7270
FAX: (206) 220-7265

16591
August 16, 2002

Mr. Timothy Lane, P.E.
Bridge and Structures Unit
King County Road Services Division
MS KSC-TR-0313
201 South Jackson Street
Seattle, WA 98104-3856

Dear Mr. Lane:

As you requested, this clarifies the status of the permit for the South Park Bridge across the Duwamish River on 14th/16th Avenue South. The drawings supplied by King County's letter of September 8, 1998, were accepted as a legitimate revision of the permit drawings for the original approval document of 1929. These are considered as-built drawings for the bascule bridge and the clearances measured by the survey in 1998 are considered the approved dimensions for the navigation span.

Sincerely,

Austin Pratt
Chief, Bridge Section
By direction of the District Commander

King County
Road Services Division
Department of Transportation
Yesler Building
400 Yesler Way, Room 400
Seattle, WA 98104-2637

September 8, 1998

Austin Pratt
13th Coast Guard District
915 Second Avenue
Seattle, WA 98174-1067

RE: 14th/16th Avenue South Bridge - Permit

Dear Mr. Pratt:

Application is hereby made for a modification of the existing bridge permit for the 14th/16th Avenue South Bridge across the Duwamish waterway at mile 3.8. The existing permit is based on preliminary construction plans from 1928. The horizontal and vertical clearances shown are inaccurate, and need to be updated.

Enclosed please find three sheets showing the site map and the bridge's horizontal and vertical clearances in both the open and closed positions. The vertical clearances are given from the Mean High Water (MHW) mark, and the horizontal clearances are shown perpendicular to the channel centerline. All dimensions are labeled in both English and metric units.

Thank you for your cooperation. If you have any questions or comments regarding this application, please call Tim Lane, Senior Engineer, at (206) 296-3708, or Scott Smith, Engineer, at (206) 296-8787.

Sincerely,

Ronald J. Paananen, P.E.
County Road Engineer

RP:SDS:mp

Enclosures

cc: Ross Earnst, Public Works Director, City of Tukwila
Brian Shelton, City Engineer, City of Tukwila
Jim Markus, Supervising Engineer, Bridge and Structures Unit
Tim Lane, Senior Engineer, Bridge and Structures Unit

RECYCLED PAPER

VICINITY MAP

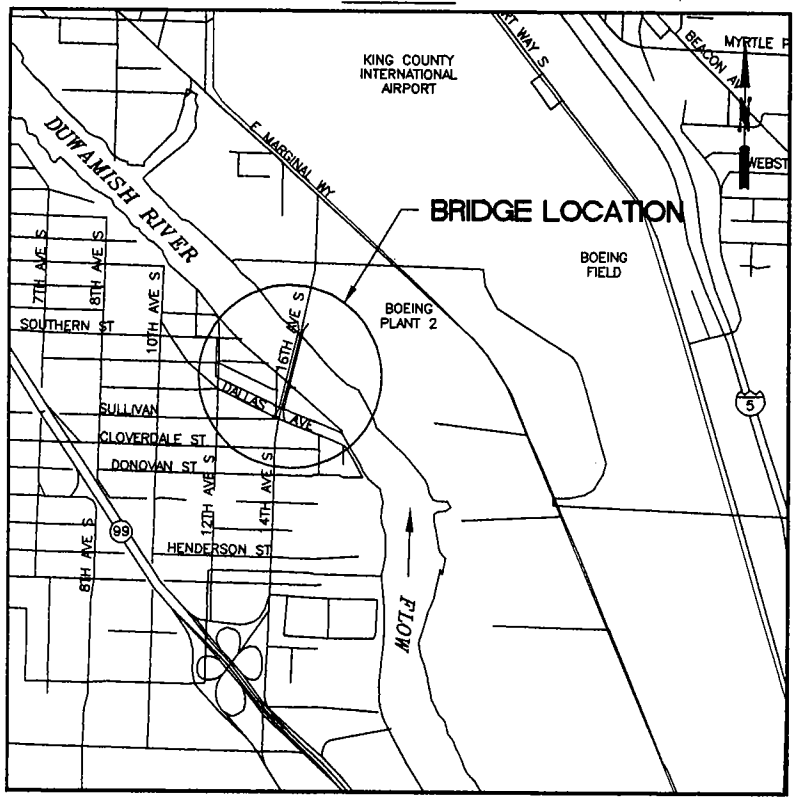

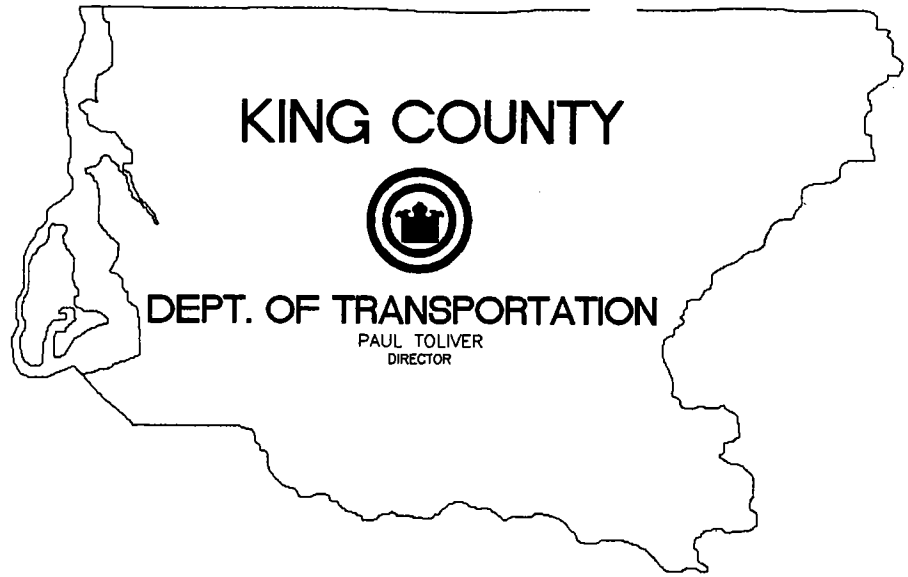

INDEX

SHEET	DESCRIPTION
1	SITE MAP
2	BRIDGE CLOSED – PLAN & ELEVATION
3	BRIDGE OPEN – PLAN & ELEVATION

14TH/16TH AVE. SOUTH BRIDGE

ON THE DUWAMISH RIVER AT MILE 3.8 (6.1 km)

CALL 2 DAYS
BEFORE YOU DIG
1-800-424-5555
(UNDERGROUND UTILITY LOCATIONS ARE APPROX.)

FIELD BOOK:		
SURVEYED:		
SURVEY BASE MAP:		
DESIGN ENTERED:	K. RIPLEY	1998
DESIGNED	S. SMITH	1998
CHECKED:	T. LANE	1998
SUPERVISOR:		

FED. AID No. _____

PROJECT No. 300988

SURVEY No. _____

MAINTENANCE DIVISION No. 3

KING COUNTY DEPT. OF TRANSPORTATION
PAUL TOLIVER, DIRECTOR

14TH/16TH AVE. SOUTH BRIDGE

COAST GUARD BRIDGE PERMIT – SEPTEMBER 1998
SITE MAP

SHEET 1 OF 3 SHEETS

/bridge/16thaves/permits/16PERM1.dwg

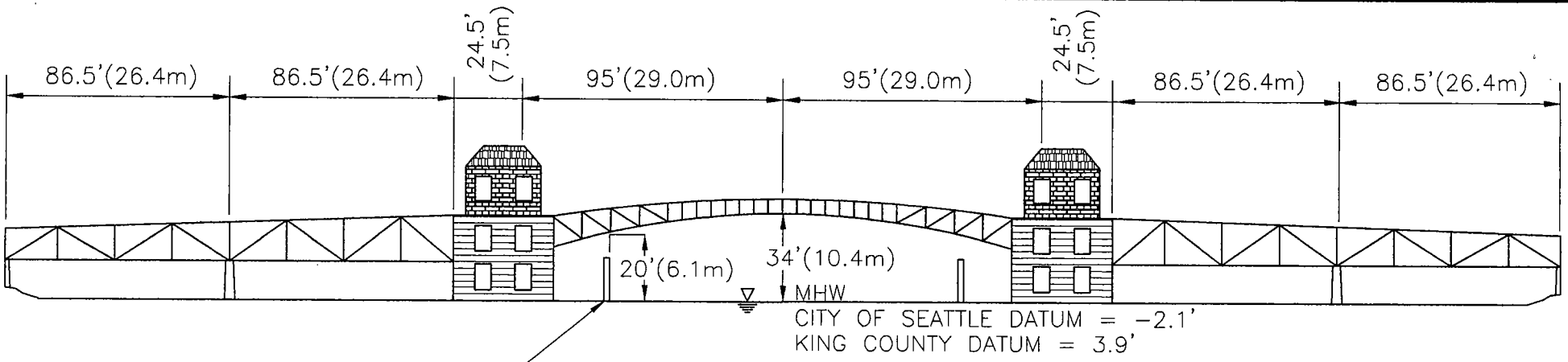

ELEVATION

NTS

NOTE: BRIDGE IS CONSTRUCTED SKEWED TO CHANNEL. .CLEARANCES SHOWN ARE PERPENDICULAR TO CHANNEL ℄.

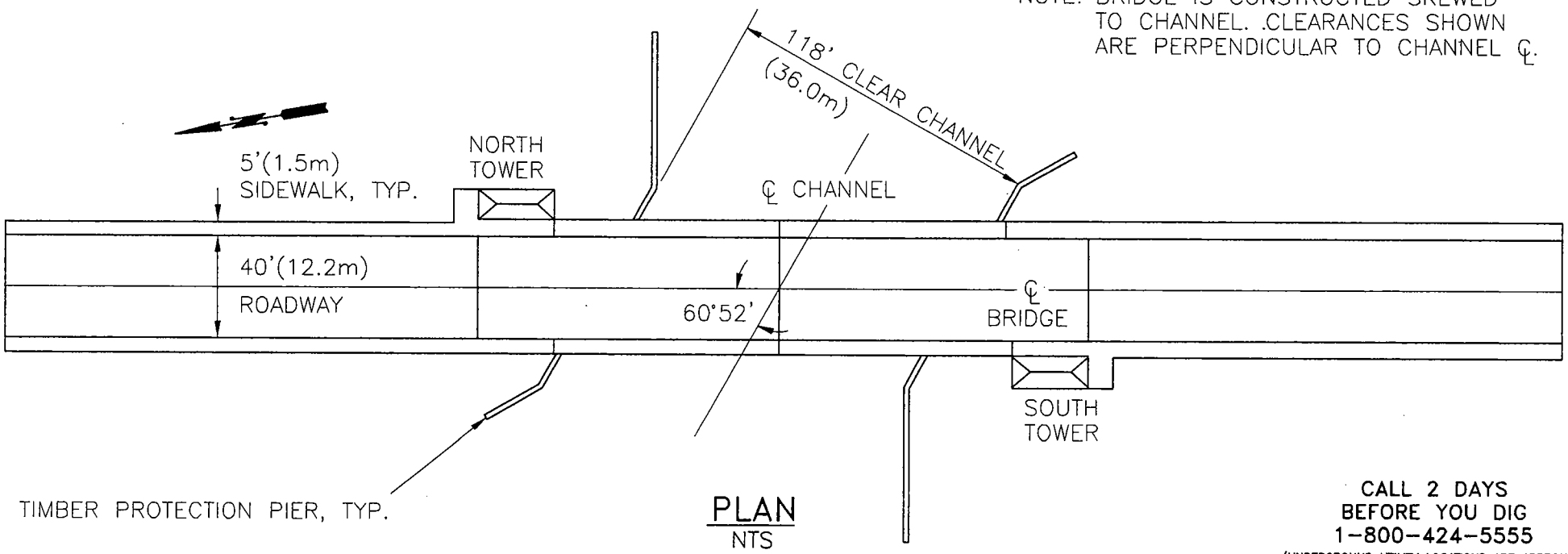

PLAN

NTS

CALL 2 DAYS
BEFORE YOU DIG
1-800-424-5555
(UNDERGROUND UTILITY LOCATIONS ARE APPROX.)

FIELD BOOK:		
SURVEYED:		
SURVEY BASE MAP:		
DESIGN ENTERED:	K. RIPLEY	1998
DESIGNED	S. SMITH	1998
CHECKED:	T. LANE	1998
SUPERVISOR:		

FED. AID No. _____

PROJECT No. 300988

SURVEY No. _____

MAINTENANCE DIVISION No. 3

KING COUNTY DEPT. OF TRANSPORTATION

PAUL TOLIVER, DIRECTOR

14TH/16TH AVE. SOUTH BRIDGE

COAST GUARD BRIDGE PERMIT
BRIDGE CLOSED – PLAN & ELEVATION

SHEET 2 OF 3 SHEETS

/bridge/16thaves/permit/16perm2.dwg 1/16/98

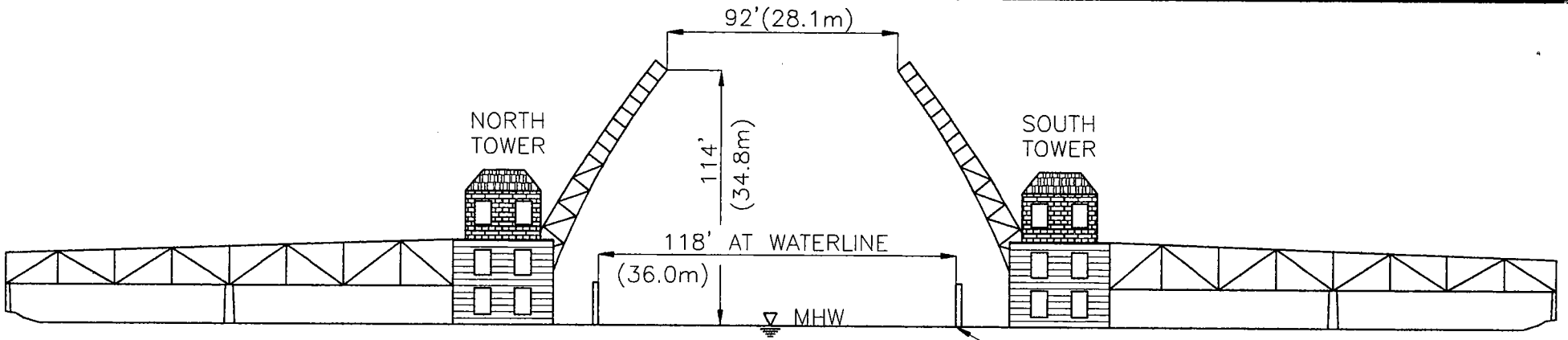

ELEVATION
NTS

NOTE: BRIDGE IS CONSTRUCTED SKEWED TO CHANNEL. CLEARANCES SHOWN ARE PERPENDICULAR TO CHANNEL ℄.

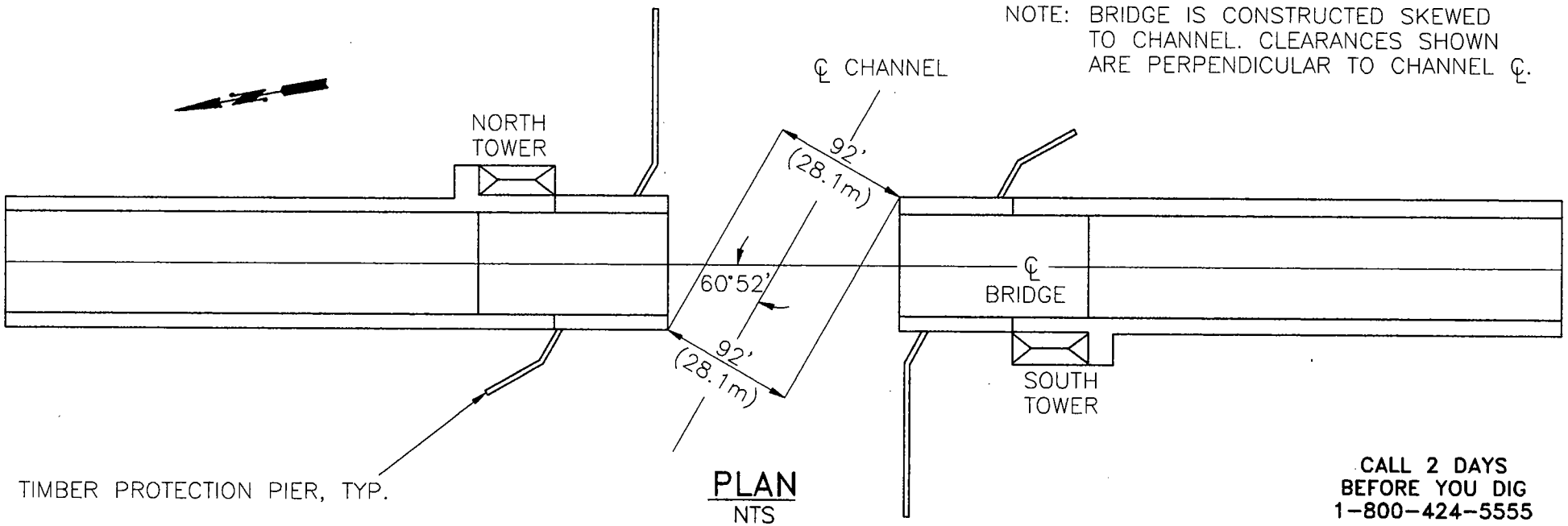

PLAN
NTS

CALL 2 DAYS BEFORE YOU DIG
1-800-424-5555
(UNDERGROUND UTILITY LOCATIONS ARE APPROX.)

FIELD BOOK:		
SURVEYED:		
SURVEY BASE MAP:		
DESIGN ENTERED:	K. RIPLEY	1998
DESIGNED	S. SMITH	1998
CHECKED:	T. LANE	1998
SUPERVISOR:		

FED. AID No. _____

PROJECT No. 300988

SURVEY No. _____

MAINTENANCE DIVISION No. 3

KING COUNTY DEPT. OF TRANSPORTATION
PAUL TOLIVER, DIRECTOR

14TH/16TH AVE. SOUTH BRIDGE

COAST GUARD BRIDGE PERMIT
BRIDGE OPEN – PLAN & ELEVATION

SHEET 3 OF 3 SHEETS

/bridge/16thaves/permit/16perm3.dwg 1/16/98

Site-Specific Response Spectra

Appendix C

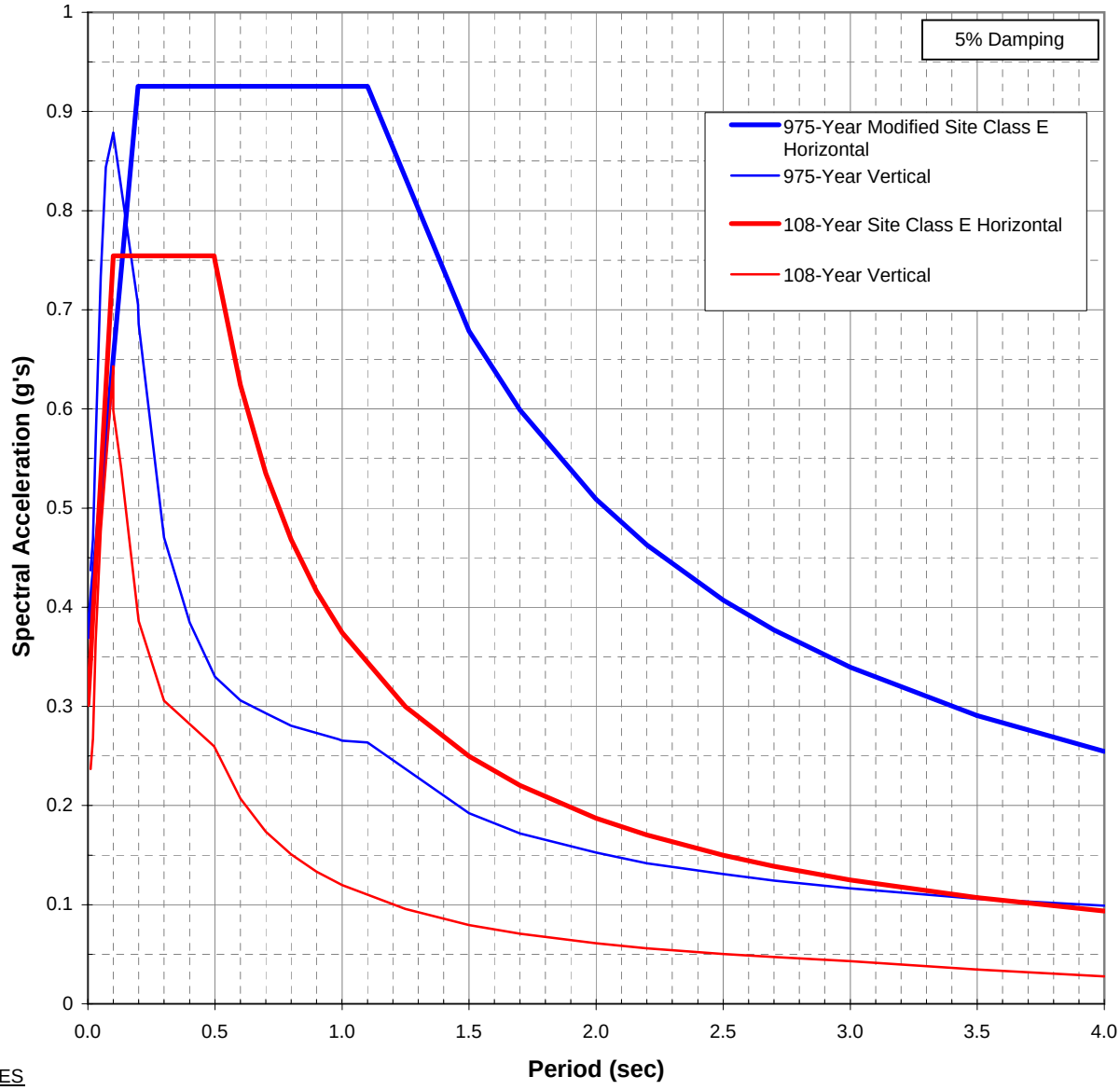

NOTES

1. Horizontal response spectra were developed based on the spectral shape in the "Recommended 2006 AASHTO LRFD Guidelines for the Seismic the Seismic Design of Highway Bridges." Ground motions specified by these guidelines are those with a 5% probability of exceedence in 50 years (975-yearreturn period). The 108-year spectrum used the spectral shape specified for the guidelines with S_S and S_1 values consistent with a 108-year return period.

2. The site average shear wave velocity is 627 feet per second (fps). Sites with average shear wave velocities greater than 600 fps are classified as "D"; sites with average shear wave velocity less than 600 fps are classified as "E." However, Site Class E spectra more closely approximate the results of ground response analyses performed at this site. Consequently, horizontal spectra are based on Site Class E shape. The shape of the 975-year spectrum was modified to envelope the response measured from the 2001 Nisqually Earthquake nearby on Harbor Island.

3. Vertical response spectra were developed by multiplying the horizontal spectra by a vertical-to-horizontal (V/H) spectral ratio. The ratios are for earthquake consistent with 108-year and 975-year return period ground motions and were developed for the nearby Alaskan Way Viaduct & Seawall Replacement Project using published attenuation relationships.

South Park Bridge

Seattle, Washington

975-YEAR AND 108-YEAR HORIZONTAL AND VERTICAL RESPONSE SPECTRA SITE CLASS E

November 2006 21-1-09584-010

SHANNON & WILSON, INC.
Geotechnical and Environmental Consultants

FIG. _____

Drive System Layout Options

Appendix D

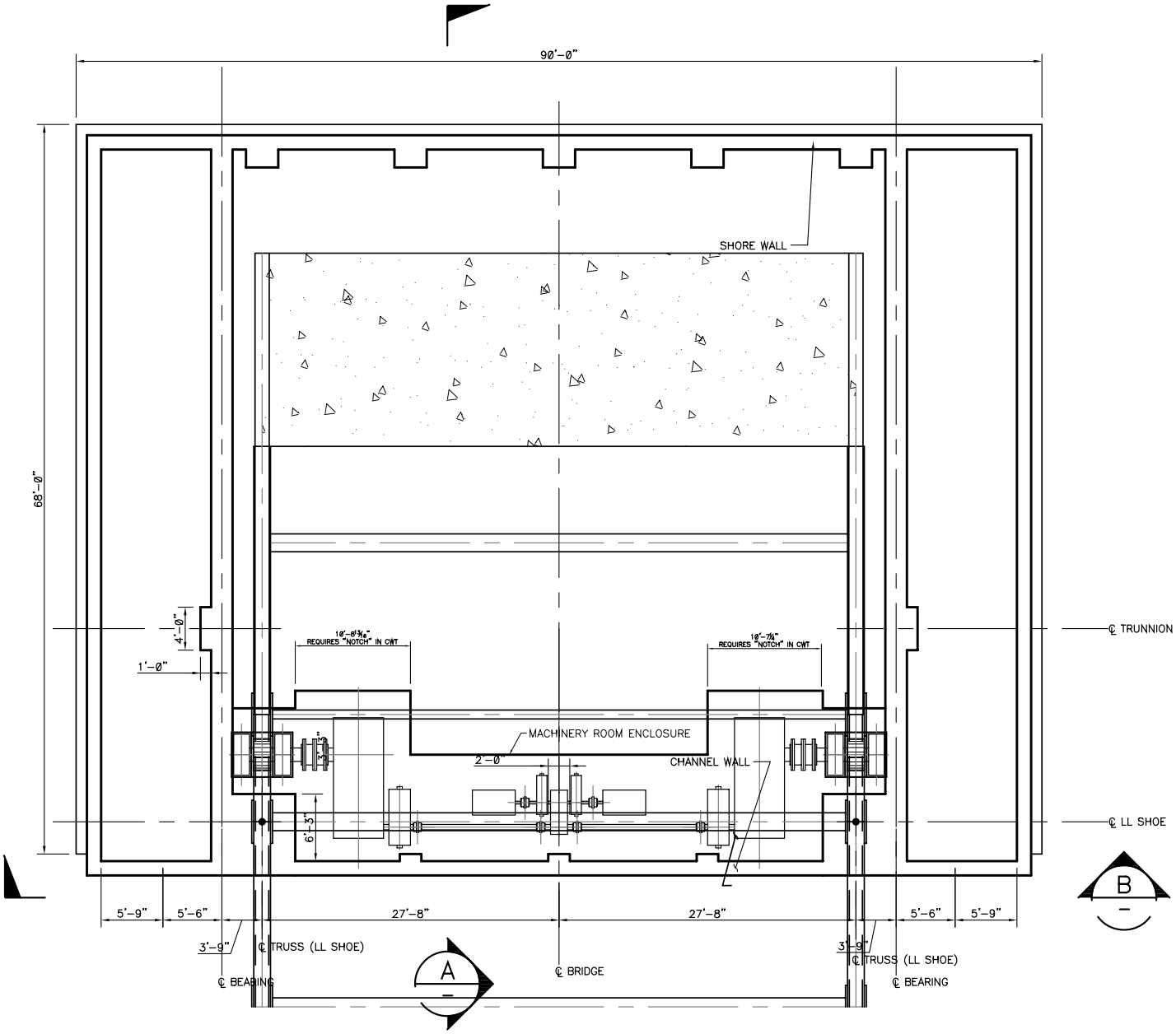

MECHANICAL SPAN DRIVE MACHINERY
PLAN VIEW LAYOUT NO. 1
(PRELIMINARY ENVELOPE DIMENSIONS)

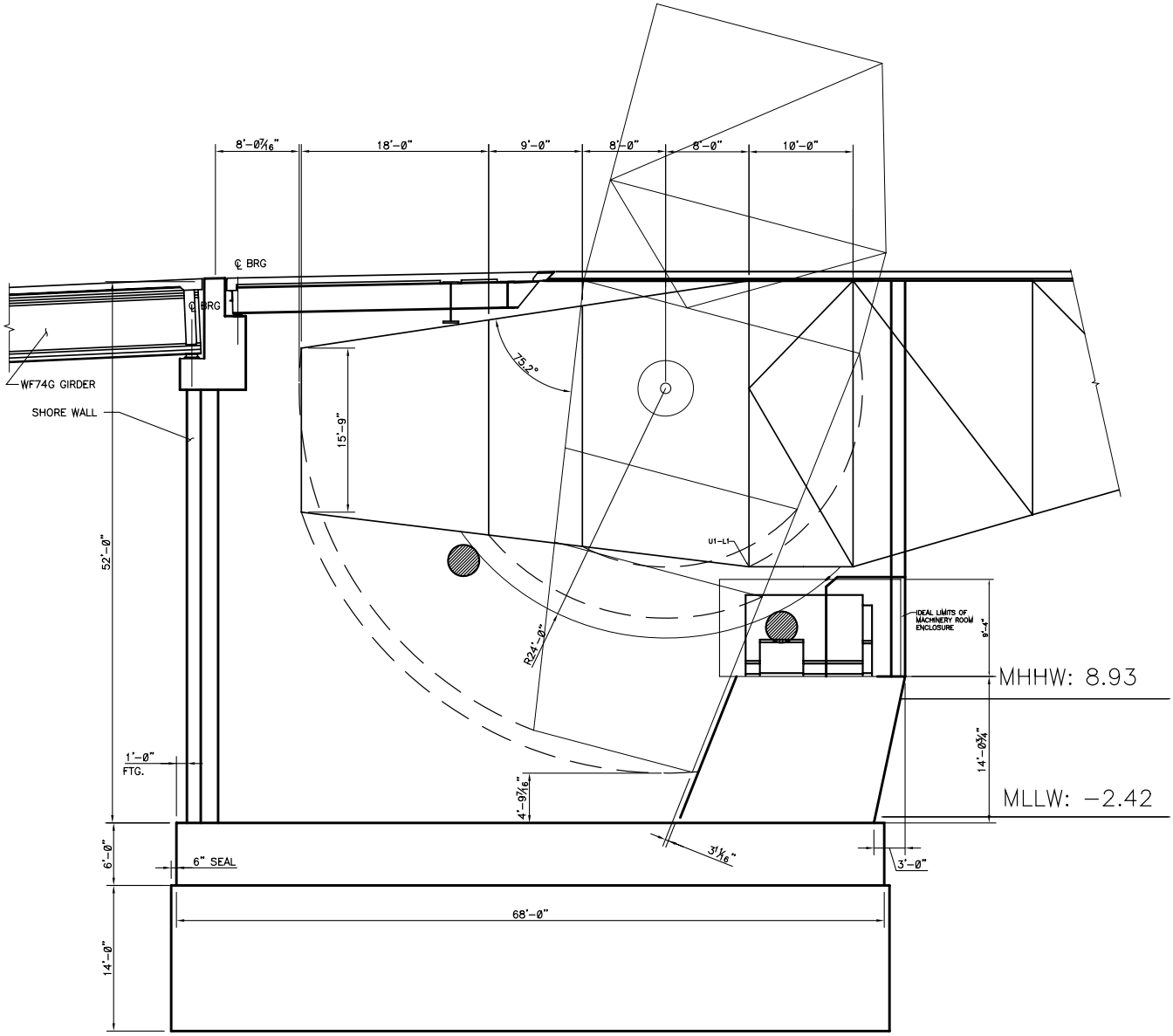

A

MECHANICAL SPAN DRIVE MACHINERY
SIDE ELEVATION VIEW LAYOUT NO. 1
(PRELIMINARY ENVELOPE DIMENSIONS)

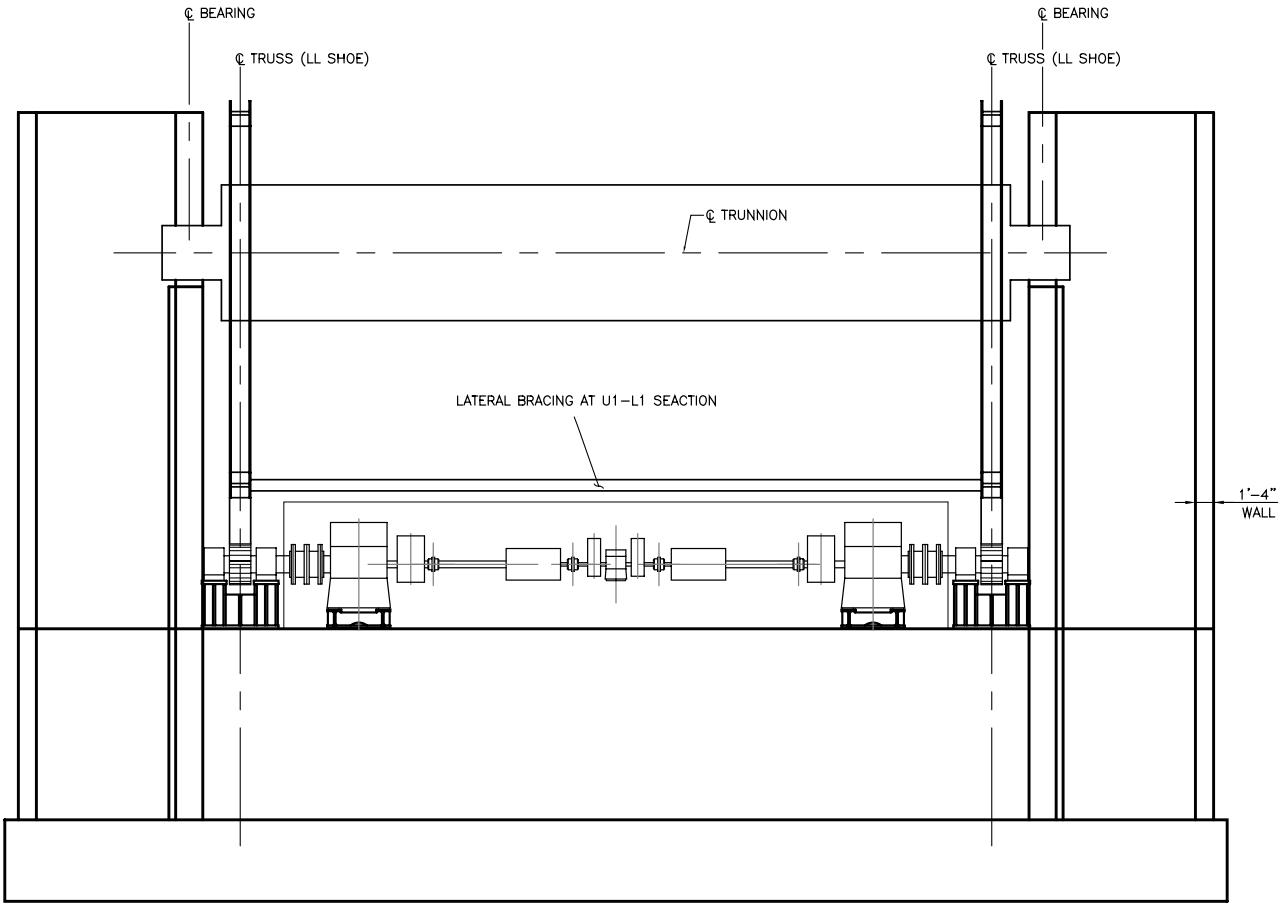

B
–

MECHANICAL SPAN DRIVE MACHINERY
FRONT ELEVATION VIEW LAYOUT NO. 1
(PRELIMINARY ENVELOPE DIMENSIONS)

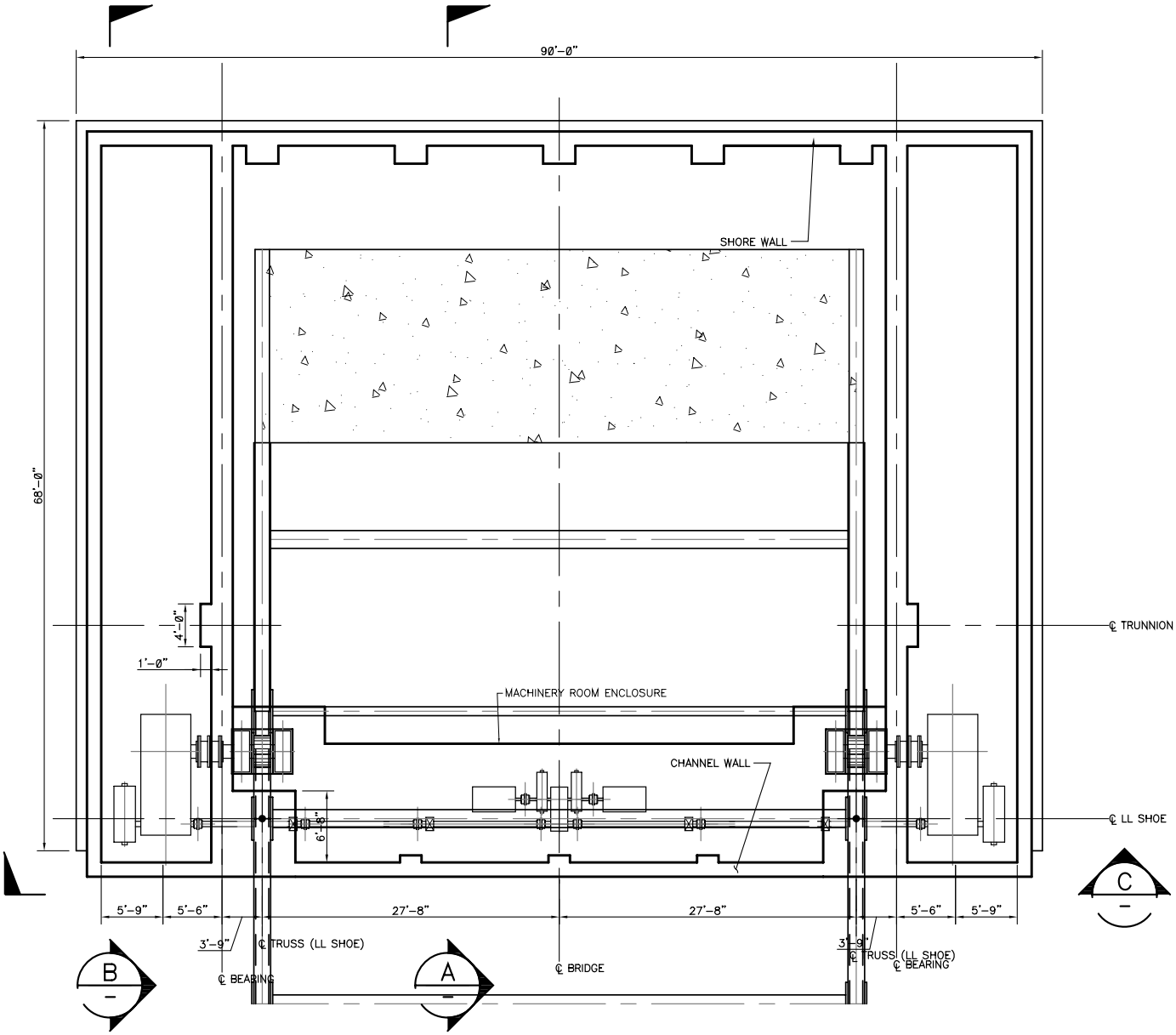

MECHANICAL SPAN DRIVE MACHINERY
PLAN VIEW LAYOUT NO. 2
(PRELIMINARY ENVELOPE DIMENSIONS)

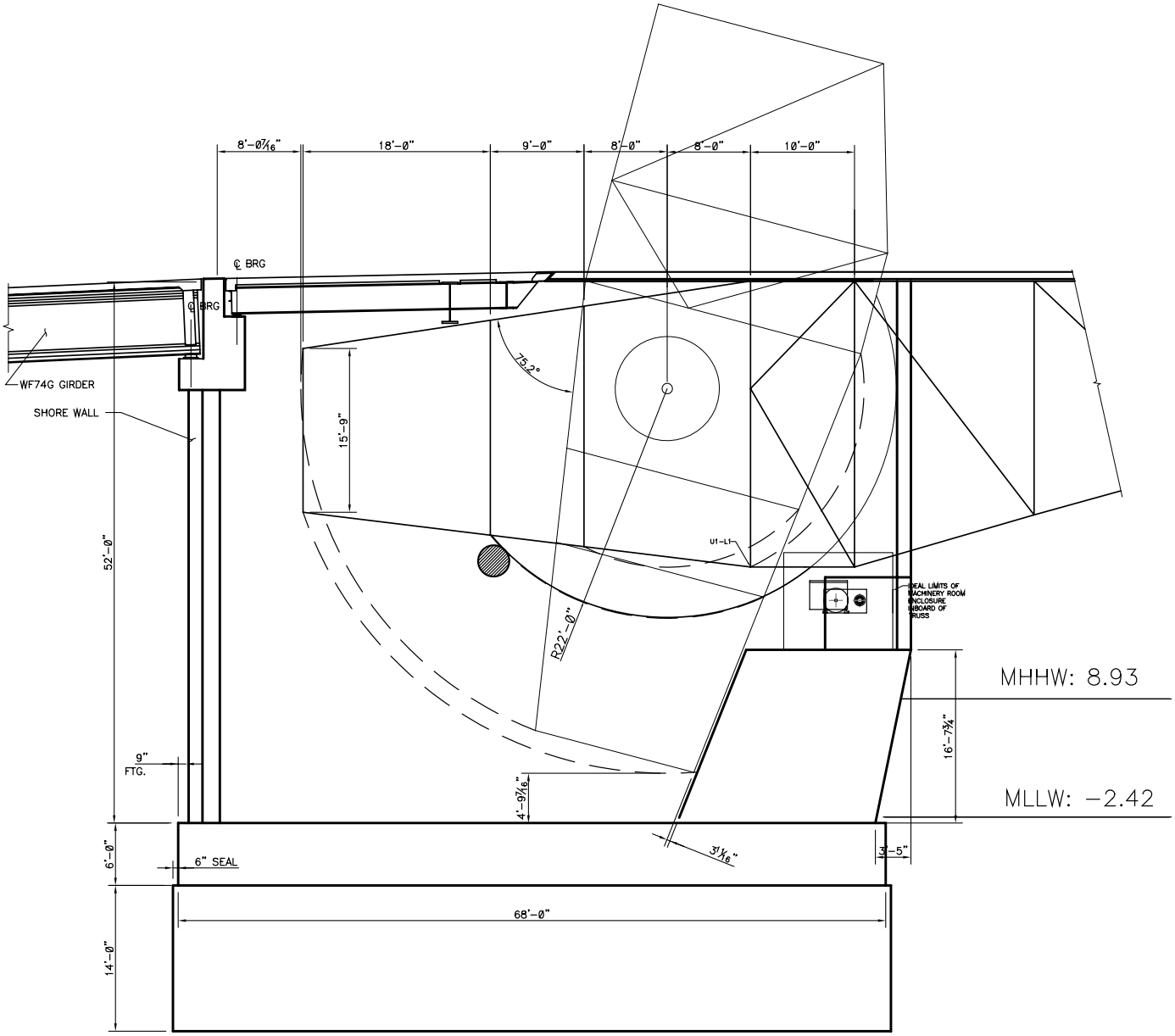

A

MECHANICAL SPAN DRIVE MACHINERY
SIDE ELEVATION VIEW LAYOUT NO. 2
(SECTION INBOARD OF TRUSS)

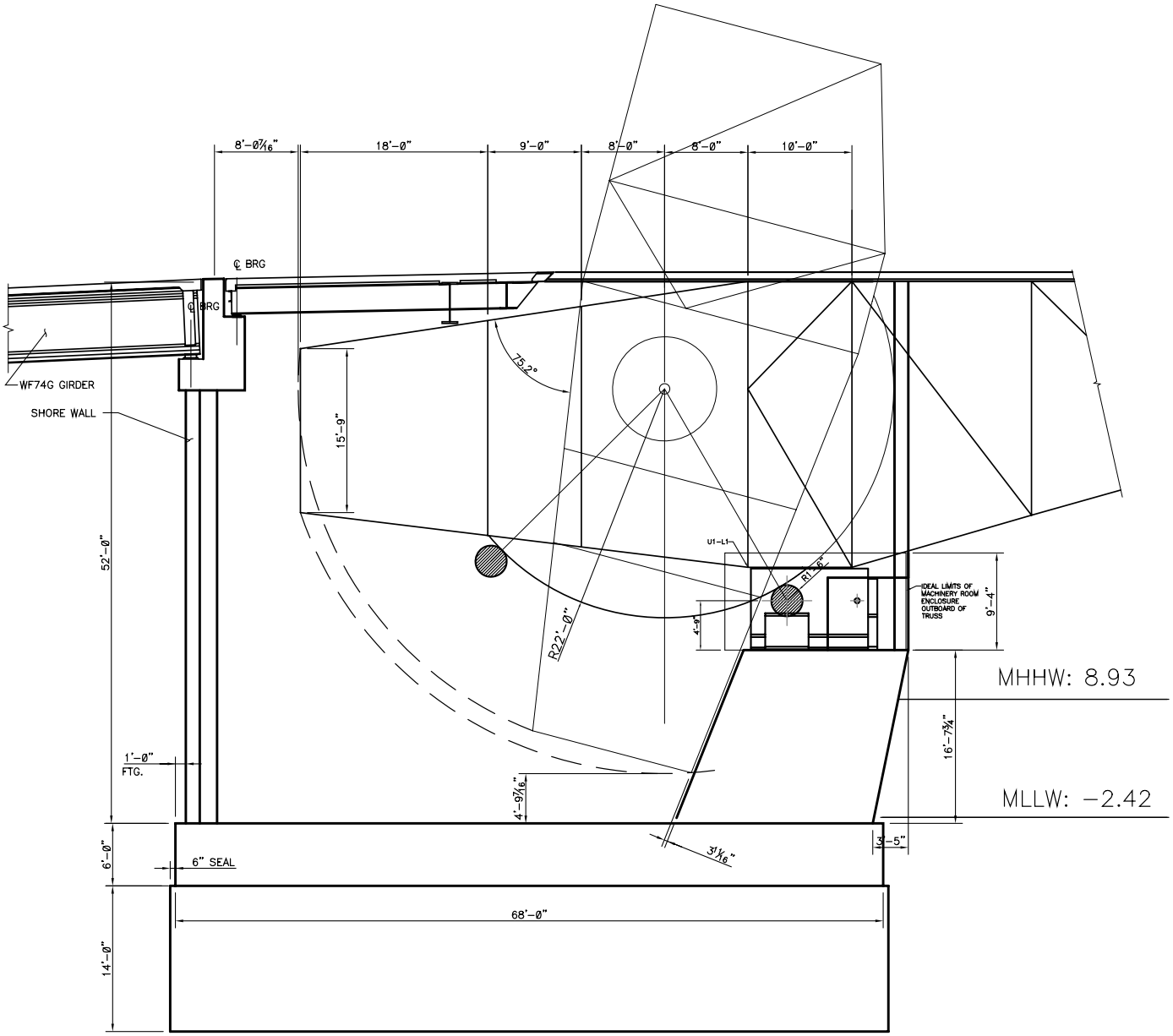

B

MECHANICAL SPAN DRIVE MACHINERY
SIDE ELEVATION VIEW LAYOUT NO. 2
(SECTION OUTBOARD OF TRUSS)

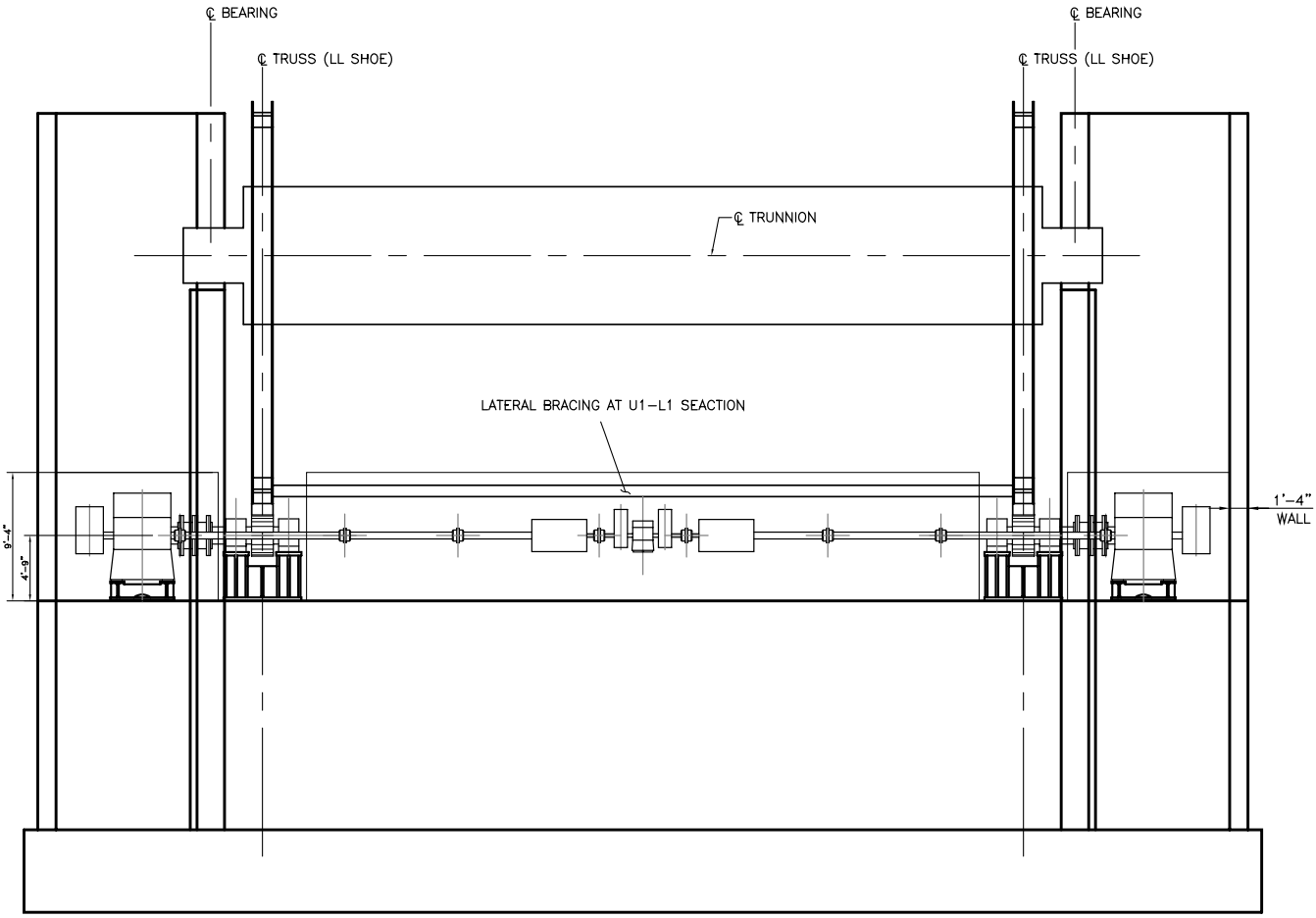

C
–

MECHANICAL SPAN DRIVE MACHINERY
FRONT ELEVATION VIEW LAYOUT NO. 2
(PRELIMINARY ENVELOPE DIMENSIONS)

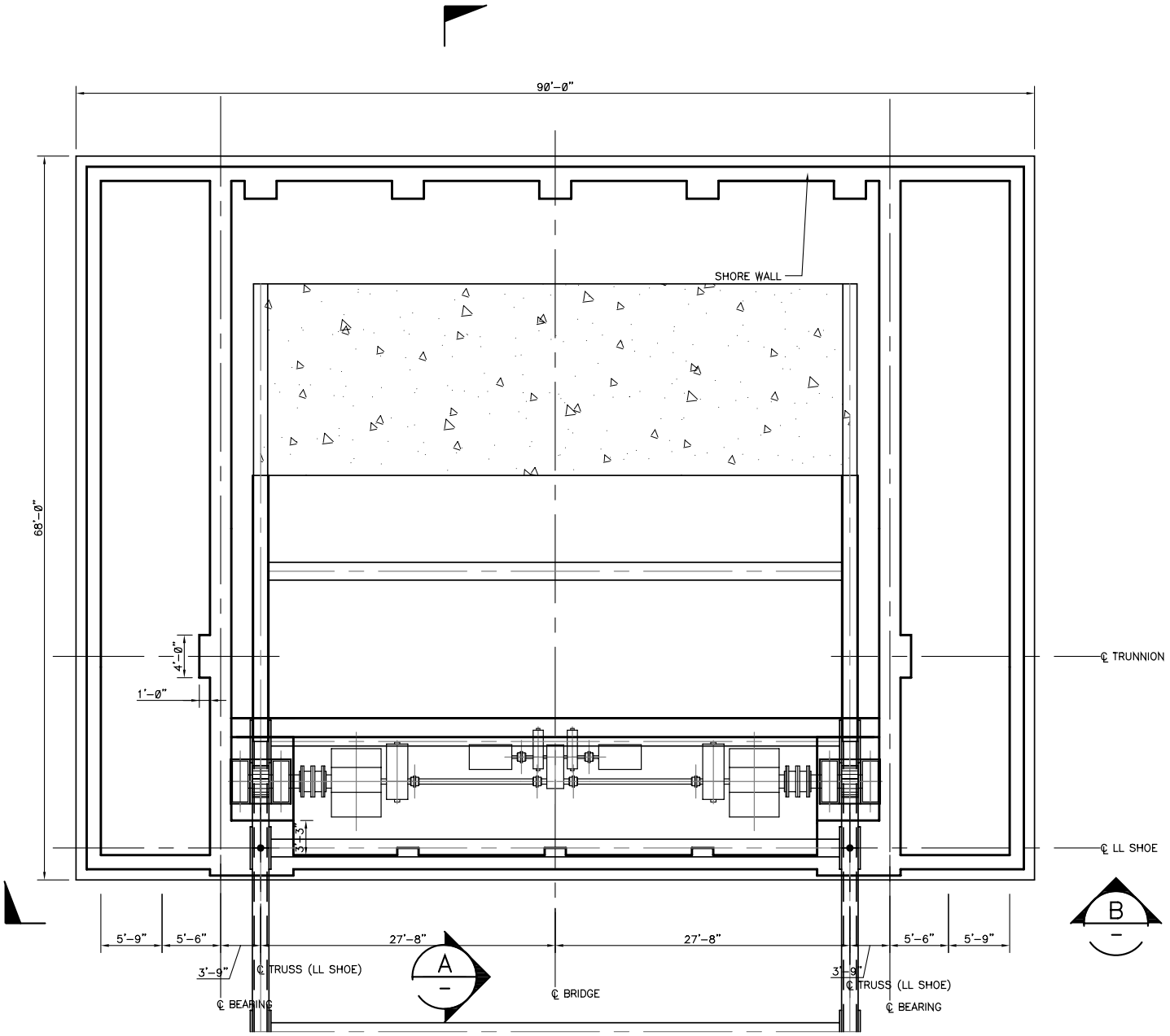

MECHANICAL SPAN DRIVE MACHINERY
PLAN VIEW LAYOUT NO. 3
(PRELIMINARY ENVELOPE DIMENSIONS)

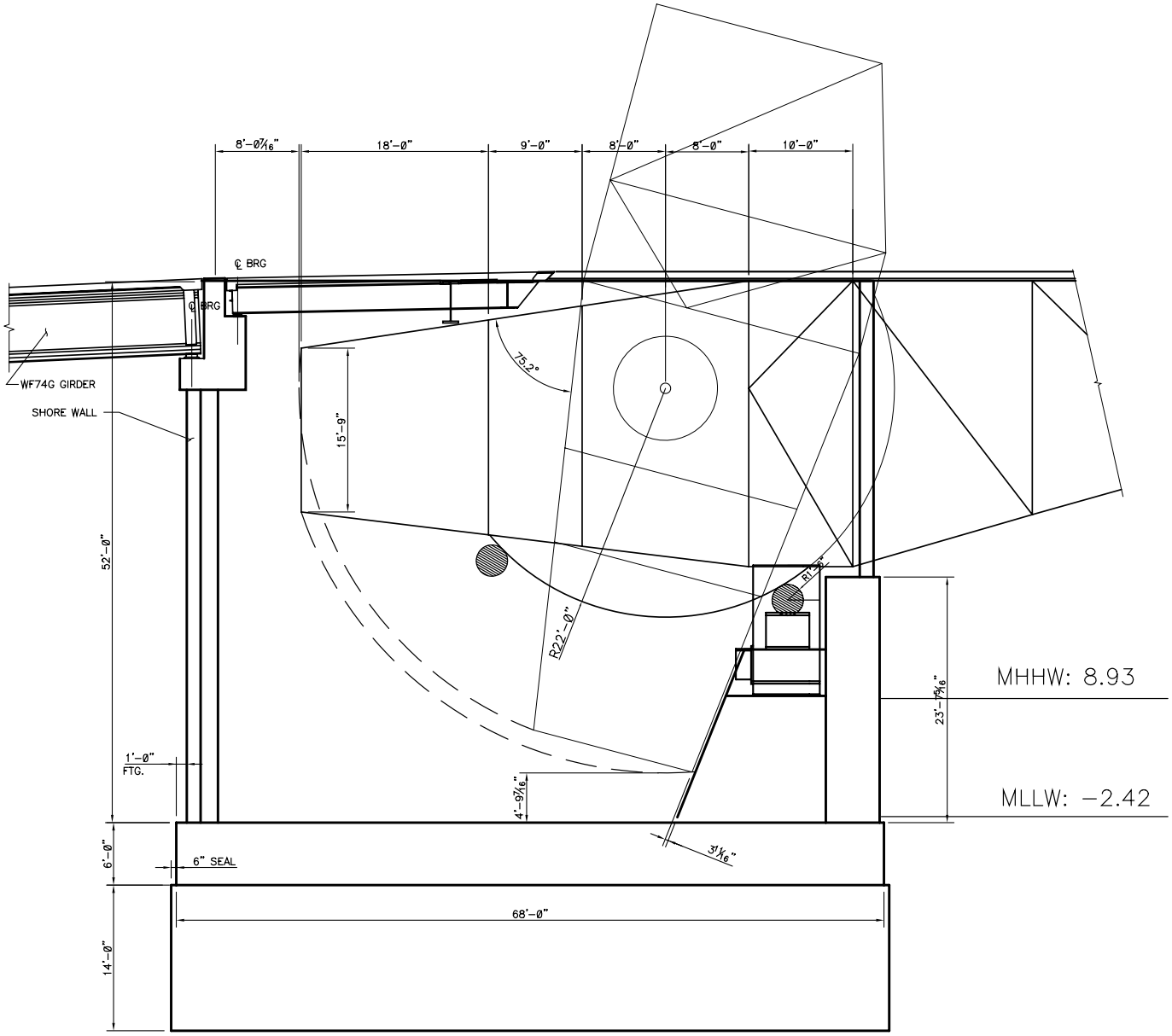

A
-

MECHANICAL SPAN DRIVE MACHINERY
SIDE ELEVATION VIEW LAYOUT NO. 3
(PRELIMINARY ENVELOPE DIMENSIONS)

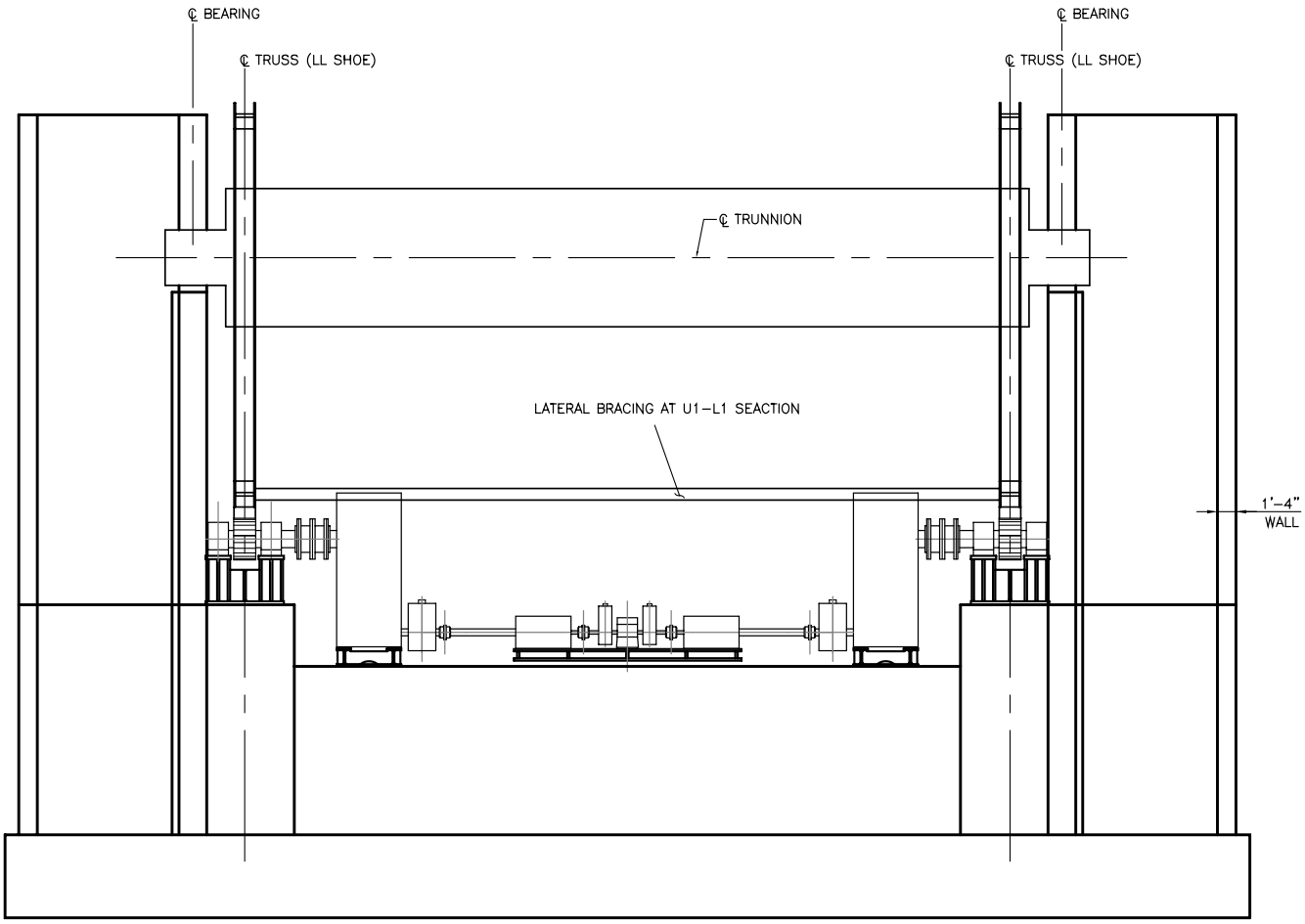

B
–

MECHANICAL SPAN DRIVE MACHINERY
FRONT ELEVATION VIEW LAYOUT NO. 3
(PRELIMINARY ENVELOPE DIMENSIONS)

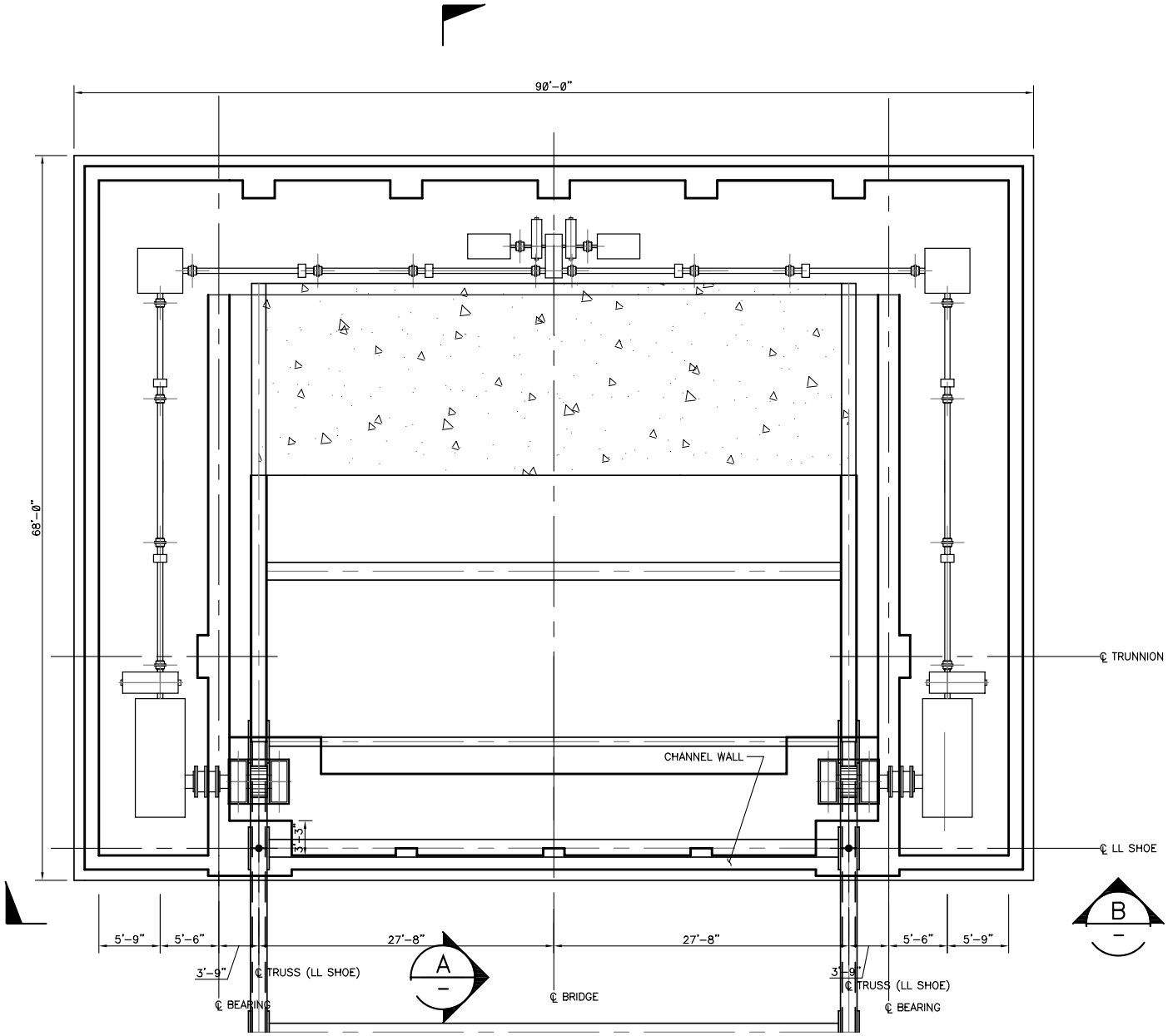

MECHANICAL SPAN DRIVE MACHINERY
PLAN VIEW LAYOUT NO. 4
(PRELIMINARY ENVELOPE DIMENSIONS)

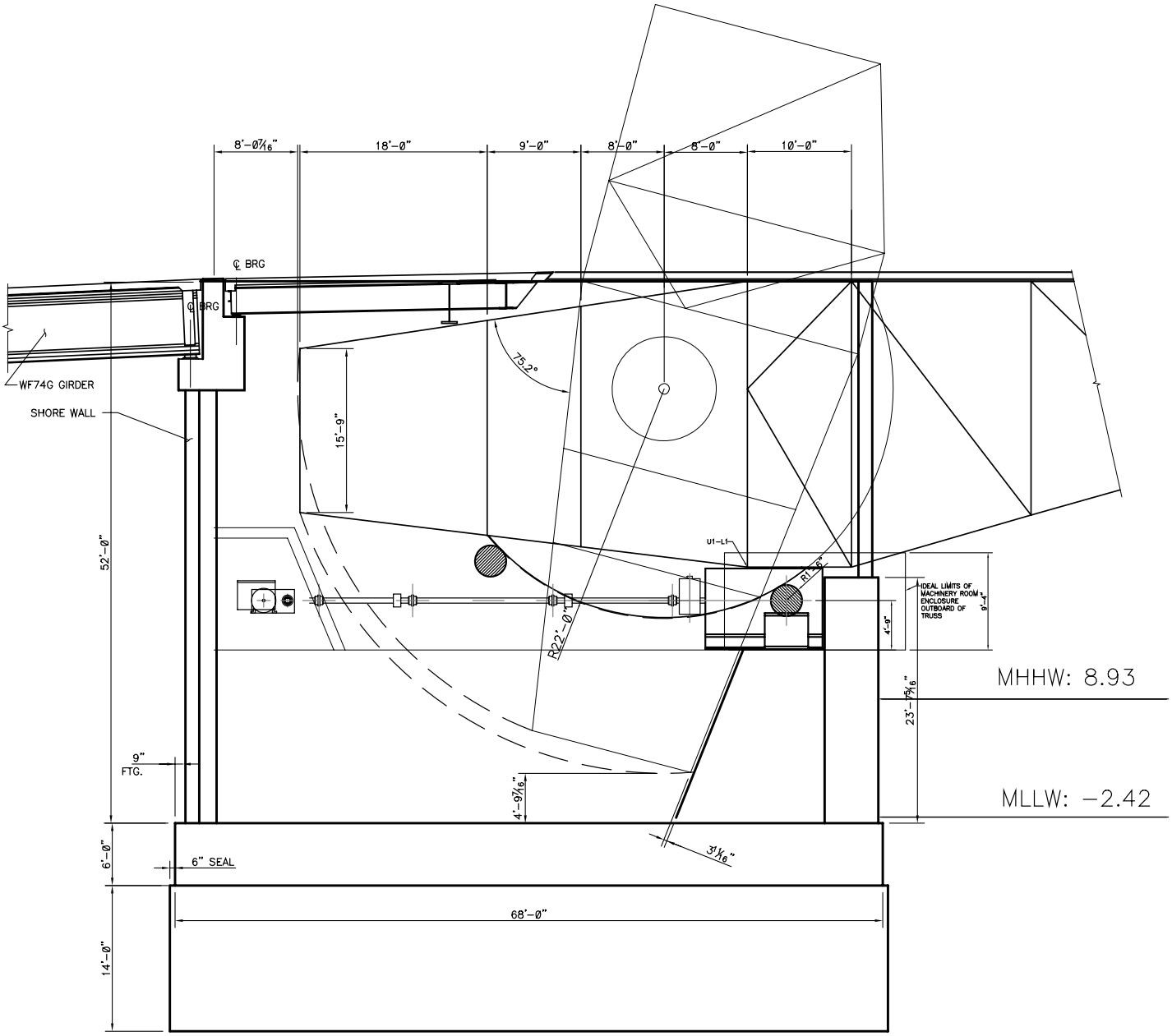

A

MECHANICAL SPAN DRIVE MACHINERY
SIDE ELEVATION VIEW LAYOUT NO. 4
(PRELIMINARY ENVELOPE DIMENSIONS)

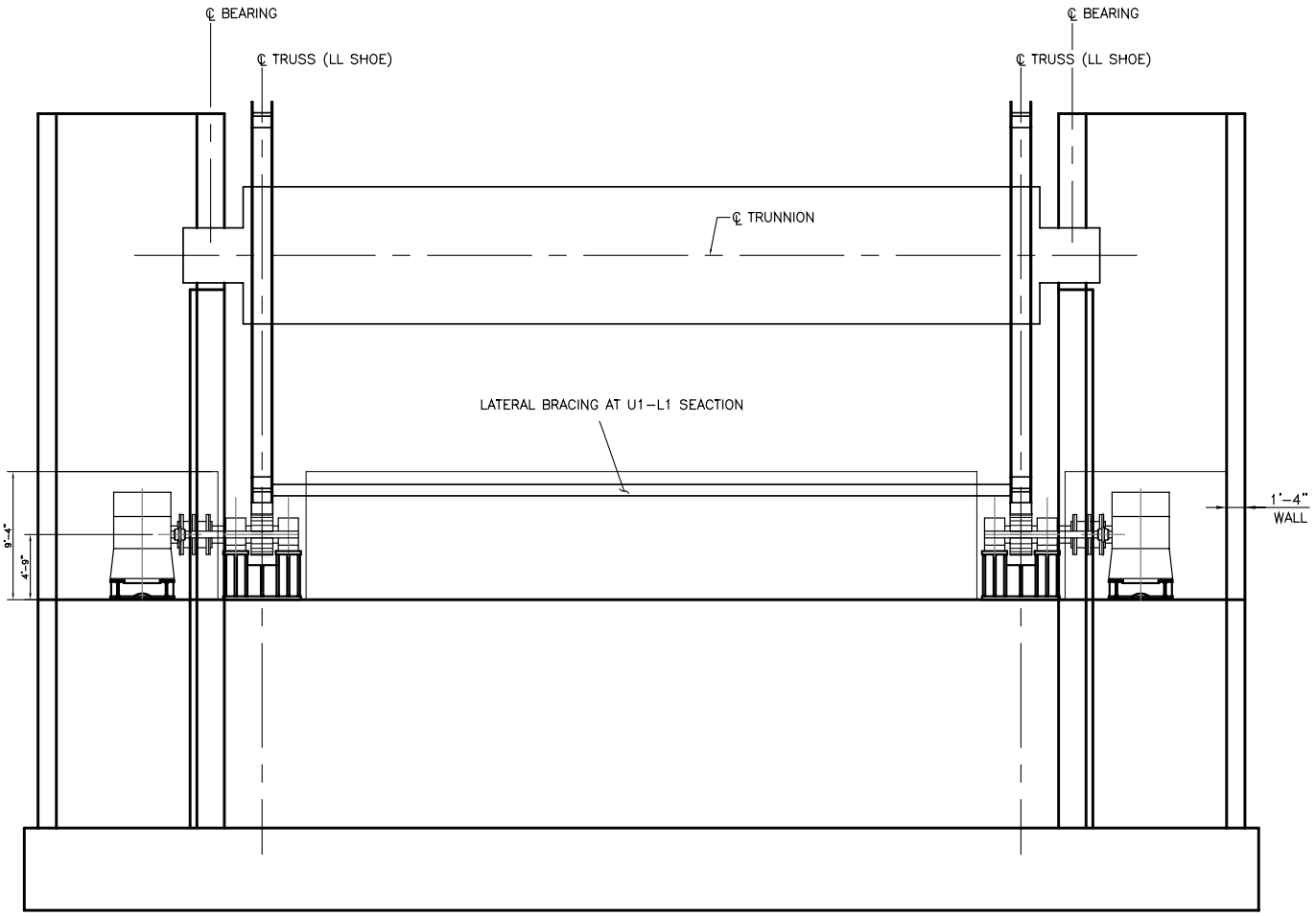

B
–

MECHANICAL SPAN DRIVE MACHINERY
FRONT ELEVATION VIEW LAYOUT NO. 4
(PRELIMINARY ENVELOPE DIMENSIONS)

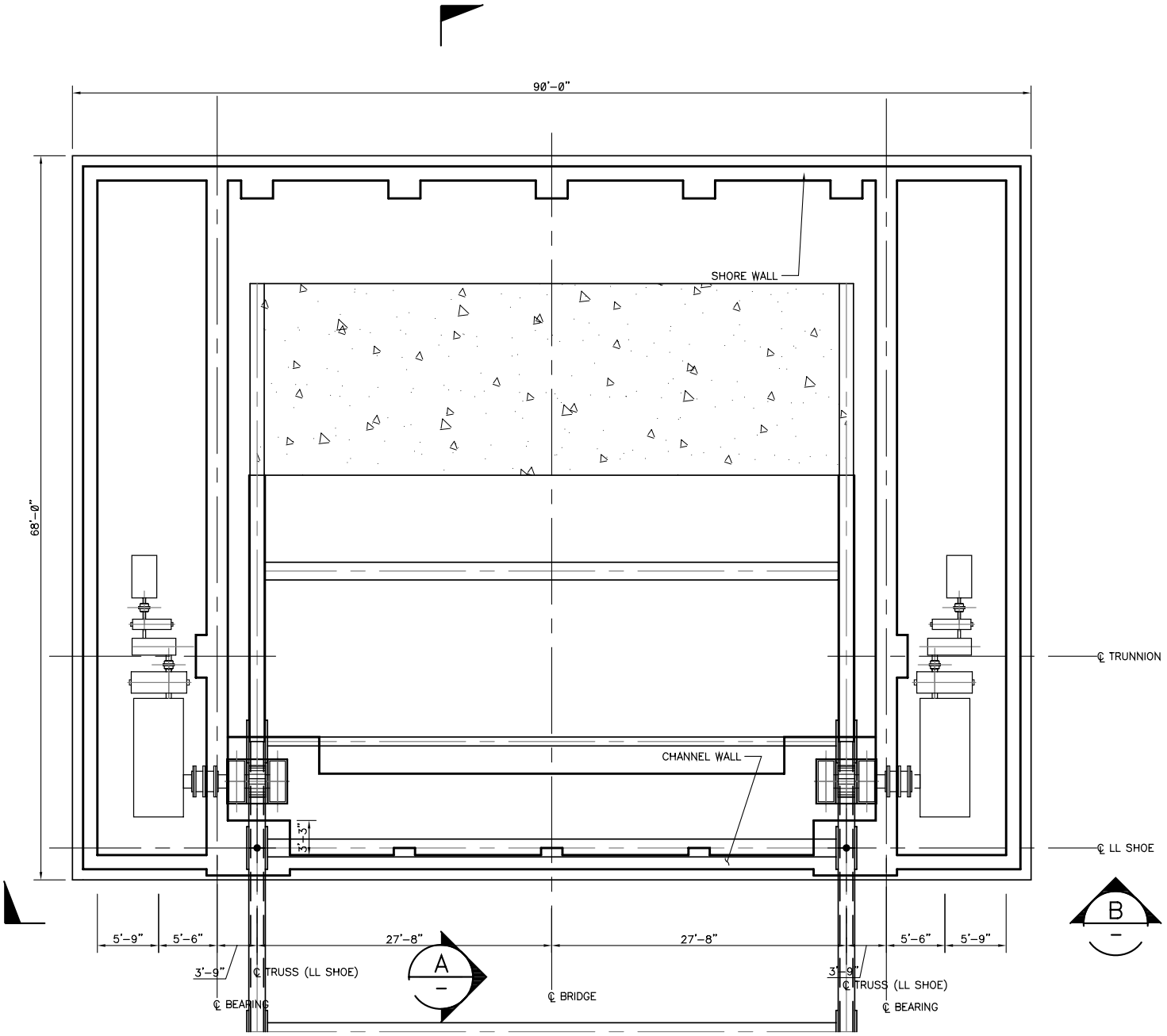

MECHANICAL SPAN DRIVE MACHINERY
PLAN VIEW LAYOUT NO. 5
(PRELIMINARY ENVELOPE DIMENSIONS)

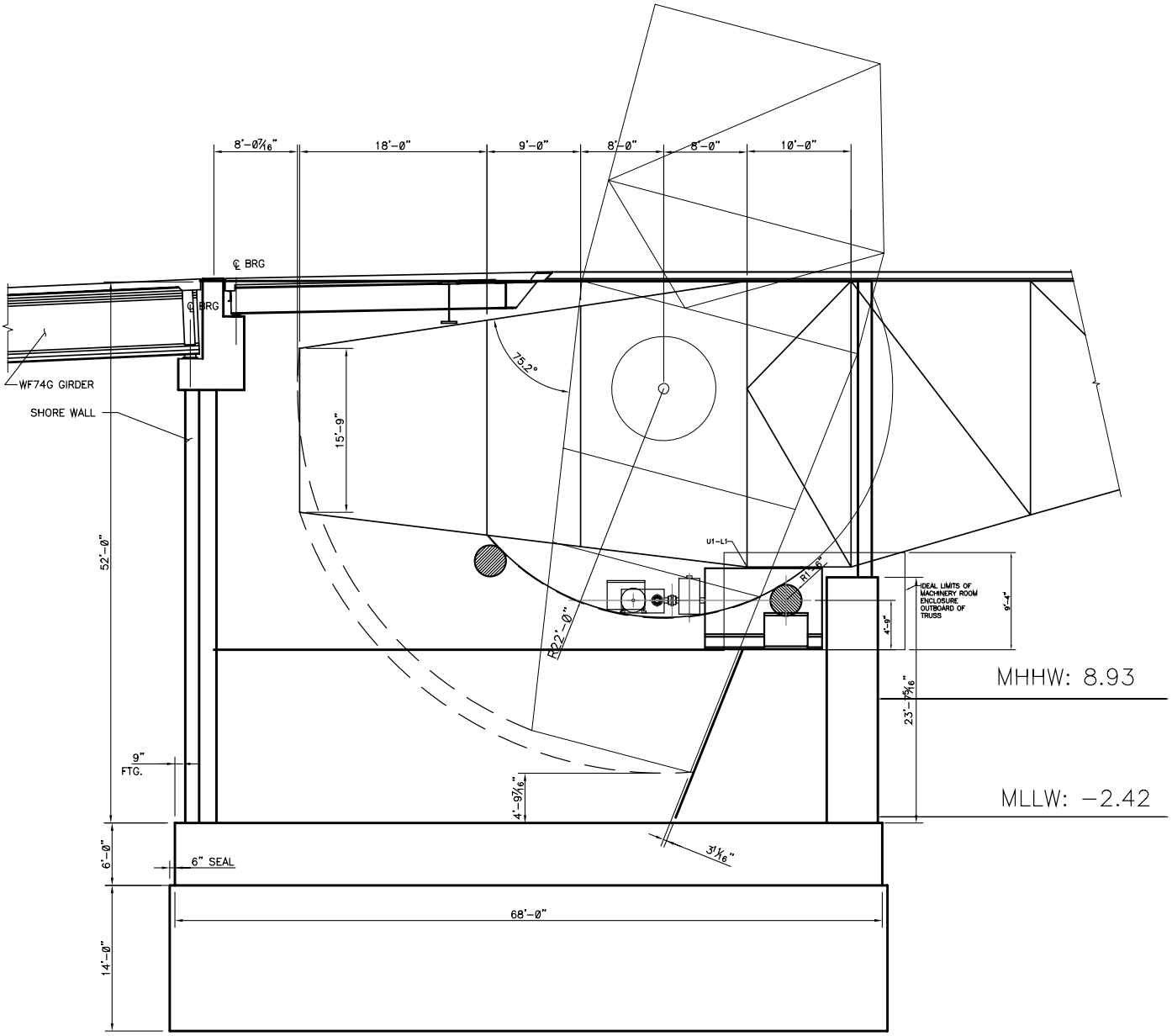

A

MECHANICAL SPAN DRIVE MACHINERY
SIDE ELEVATION VIEW LAYOUT NO. 5
(PRELIMINARY ENVELOPE DIMENSIONS)

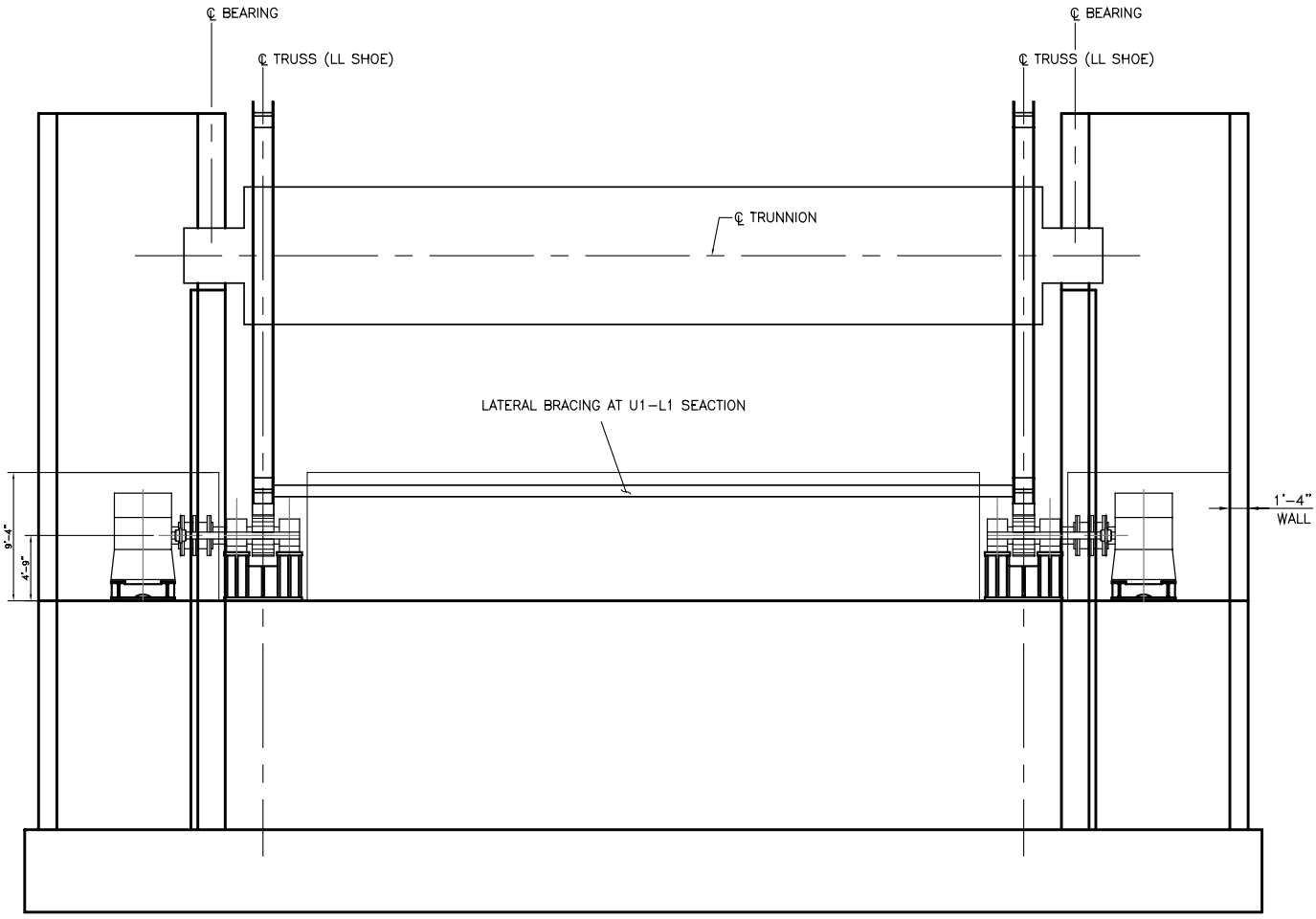

B

MECHANICAL SPAN DRIVE MACHINERY
FRONT ELEVATION VIEW LAYOUT NO. 5
(PRELIMINARY ENVELOPE DIMENSIONS)

Construction Schedule

South Park Bridge: Proposed Construction Schedule

ID	Notes	Task Name	Duration	Start	Finish
1		**Award Contract**	1 day	Fri 1/15/10	Fri 1/15/10
2		**Contractor Mobilization**	60 days	Fri 1/15/10	Thu 4/8/10
3		**Shop Drawing Review & Approval**	**100 days**	**Mon 1/18/10**	**Fri 6/4/10**
4		Steel Shop Drawing Rev & Approval	80 days	Mon 1/18/10	Fri 5/7/10
5		PC Girder Shop Drawing Rev & Approval	45 days	Mon 1/18/10	Fri 3/19/10
6		M&E System Shop Drawing Review & Approval	100 days	Mon 1/18/10	Fri 6/4/10
7		**Bascule Leaf Fabrication**	220 days	Mon 5/10/10	Thu 3/17/11
8		**Prestress Girders Fabrication**	120 days	Mon 3/22/10	Mon 9/6/10
9		**M&E System Procurement**	**220 days**	**Mon 6/7/10**	**Thu 4/14/11**
10		Mechanical System Procurement	220 days	Mon 6/7/10	Thu 4/14/11
11		Electrical System Procurement	220 days	Mon 6/7/10	Thu 4/14/11
12		**Relocate Existing Utilities**	150 days	Fri 4/9/10	Fri 11/5/10
13		**Soil Improvement**	90 days	Fri 4/23/10	Fri 8/27/10
14		**1st Year In Water Construction Window Starts**	0 days	Mon 8/2/10	Mon 8/2/10
15		**Construct Work Bridges**	**55 days**	**Mon 8/2/10**	**Fri 10/15/10**
16	In Water	Partially Remove Existing Fender (for Barge Access) -	10 days	Mon 8/2/10	Fri 8/13/10
17	In Water	Partially Remove Existing Fender (for Barge Access) -	10 days	Mon 8/16/10	Fri 8/27/10
18	In Water	Compaction Grouting under Existing Bascule Pier - South	20 days	Mon 8/9/10	Fri 9/3/10
19	In Water	Compaction Grouting under Existing Bascule Pier - North	20 days	Mon 8/23/10	Fri 9/17/10
20	In Water	Drive Steel Piles for Construction Trestle - South	30 days	Mon 8/16/10	Fri 9/24/10
21	In Water	Drive Steel Piles for Construction Trestle - North	30 days	Mon 8/30/10	Fri 10/8/10
22	In Water	Constructing Trestle Deck - South	30 days	Mon 8/23/10	Fri 10/1/10
23	In Water	Constructing Trestle Deck - North	30 days	Mon 9/6/10	Fri 10/15/10
24		**Bascule Span Foundation & Pier Construction**	**211 days**	**Mon 9/6/10**	**Thu 6/30/11**
25	In Water	Construct Pier Cofferdam - South Bascule	28 days	Mon 9/6/10	Wed 10/13/10
26	In Water	Construct Pier Cofferdam - North Bascule	28 days	Mon 9/20/10	Wed 10/27/10
27		Foundation Excavation - South Bascule	15 days	Thu 10/14/10	Wed 11/3/10
28		Foundation Excavation - North Bascule	15 days	Thu 10/28/10	Wed 11/17/10
29	In Water	Construct 8 ft Dia Shafts - South	60 days	Thu 11/4/10	Mon 1/31/11
30	In Water	Construct 8 ft Dia Shafts - North	60 days	Thu 11/18/10	Mon 2/14/11
31		Pour Concrete Seal - South Bascule	8 days	Tue 2/1/11	Thu 2/10/11
32		Pour Concrete Seal - North Bascule	8 days	Tue 2/15/11	Thu 2/24/11

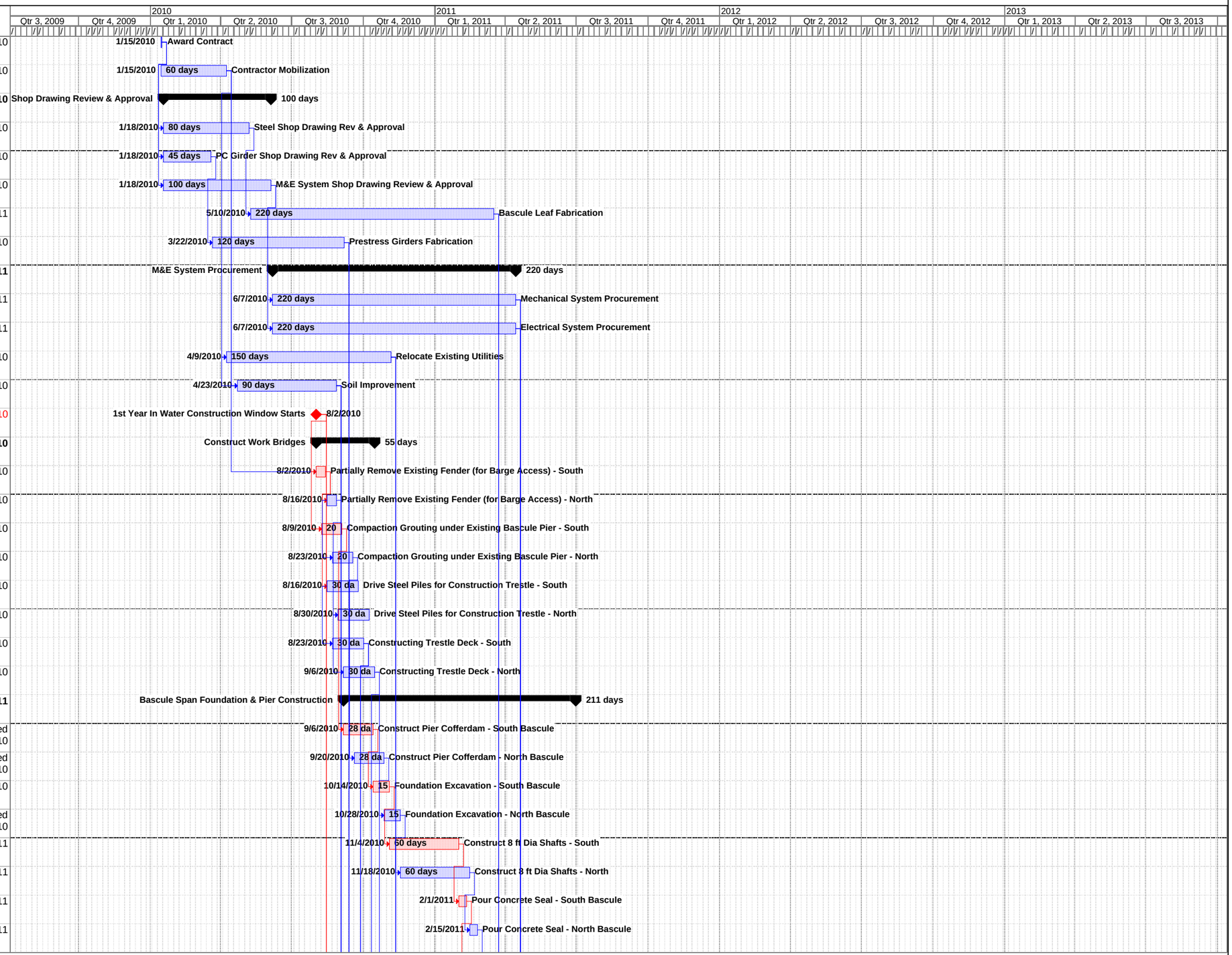

Project: South Park Movable Bridge Co
Date: Fri 8/3/07

Task | Critical Task | Milestone | Rolled Up Task | Rolled Up Milestone | Split | Project Summary | Deadline
Task Progress | Critical Task Progress | Summary | Rolled Up Critical Task | Rolled Up Progress | External Tasks | Group By Summary

South Park Bridge: Proposed Construction Schedule

ID	Notes	Task Name	Duration	Start	Finish
33		Construct Pier Footing - South Bascule	20 days	Fri 2/11/11	Thu 3/10/11
34		Construct Pier Footing - North Bascule	20 days	Fri 3/11/11	Thu 4/7/11
35		Construct Bascule Pier - South	60 days	Fri 3/11/11	Thu 6/2/11
36		Construct Bascule Pier - North	60 days	Fri 4/8/11	Thu 6/30/11
37		**1st Year In Water Construction Window Ends**	0 days	Tue 2/15/11	Tue 2/15/11
38		**2nd Year In Water Construction Window Starts**	0 days	Mon 8/1/11	Mon 8/1/11
39	In Water	Remove Cofferdam - South	15 days	Mon 8/1/11	Fri 8/19/11
40	In Water	Remove Cofferdam - North	15 days	Mon 8/1/11	Fri 8/19/11
41		**Bascule Span Superstructure Construction**	**436 days**	**Mon 10/4/10**	**Wed 6/13/12**
42		Bascule Leaf Erection - Lower Portion - South	15 days	Fri 6/3/11	Thu 6/23/11
43		Bascule Leaf Erection - Lower Portion - North	15 days	Fri 7/1/11	Fri 7/22/11
44		Install Temporary Electrical Feeder Line - South	10 days	Mon 10/4/10	Fri 10/15/10
45		Install Temporary Electrical Feeder Line - North	10 days	Mon 10/18/10	Fri 10/29/10
46		Install Mech & Electrical - South	15 days	Fri 6/24/11	Fri 7/15/11
47		Install Mech & Electrical - North	15 days	Mon 7/25/11	Fri 8/12/11
48		Countweight Balancing - 1	10 days	Mon 8/15/11	Fri 8/26/11
49		Mech & Electrical System Testing & Adjusting - 1	20 days	Mon 8/29/11	Fri 9/23/11
50		Bascule Leaf Erection - Upper Portion - South	25 days	Mon 9/26/11	Fri 10/28/11
51		Bascule Leaf Erection - Upper Portion - North	25 days	Mon 10/31/11	Mon 12/5/11
52		Install & Testing Center Lock	10 days	Tue 12/6/11	Mon 12/19/11
53		Install Bascule Span Deck - South	20 days	Tue 12/20/11	Wed 1/18/12
54		Install Bascule Span Deck - North	20 days	Tue 12/20/11	Wed 1/18/12
55		Deck Pavement & Barriers	10 days	Thu 1/19/12	Wed 2/1/12
56		Countweight Balancing - 2	30 days	Thu 2/16/12	Wed 3/28/12
57		Mech & Electrical System Testing & Adjusting - 2	35 days	Thu 3/29/12	Wed 5/16/12
58		Countweight Balancing - 3	10 days	Thu 5/17/12	Wed 5/30/12
59		Construct Bascule Fixed Span Deck	10 days	Thu 5/31/12	Wed 6/13/12
60		**Approach Structure Construction**	**261 days**	**Mon 10/4/10**	**Fri 10/7/11**
61		Construct Approach Pier Foundations - South	20 days	Mon 10/4/10	Fri 10/29/10
62		Construct Approach Pier Foundations - North	20 days	Mon 11/1/10	Mon 11/29/10
63		Construct Approach Abut Foundations - South	20 days	Tue 11/30/10	Tue 12/28/10
64		Construct Approach Abut Foundations - North	20 days	Wed 12/29/10	Wed 1/26/11

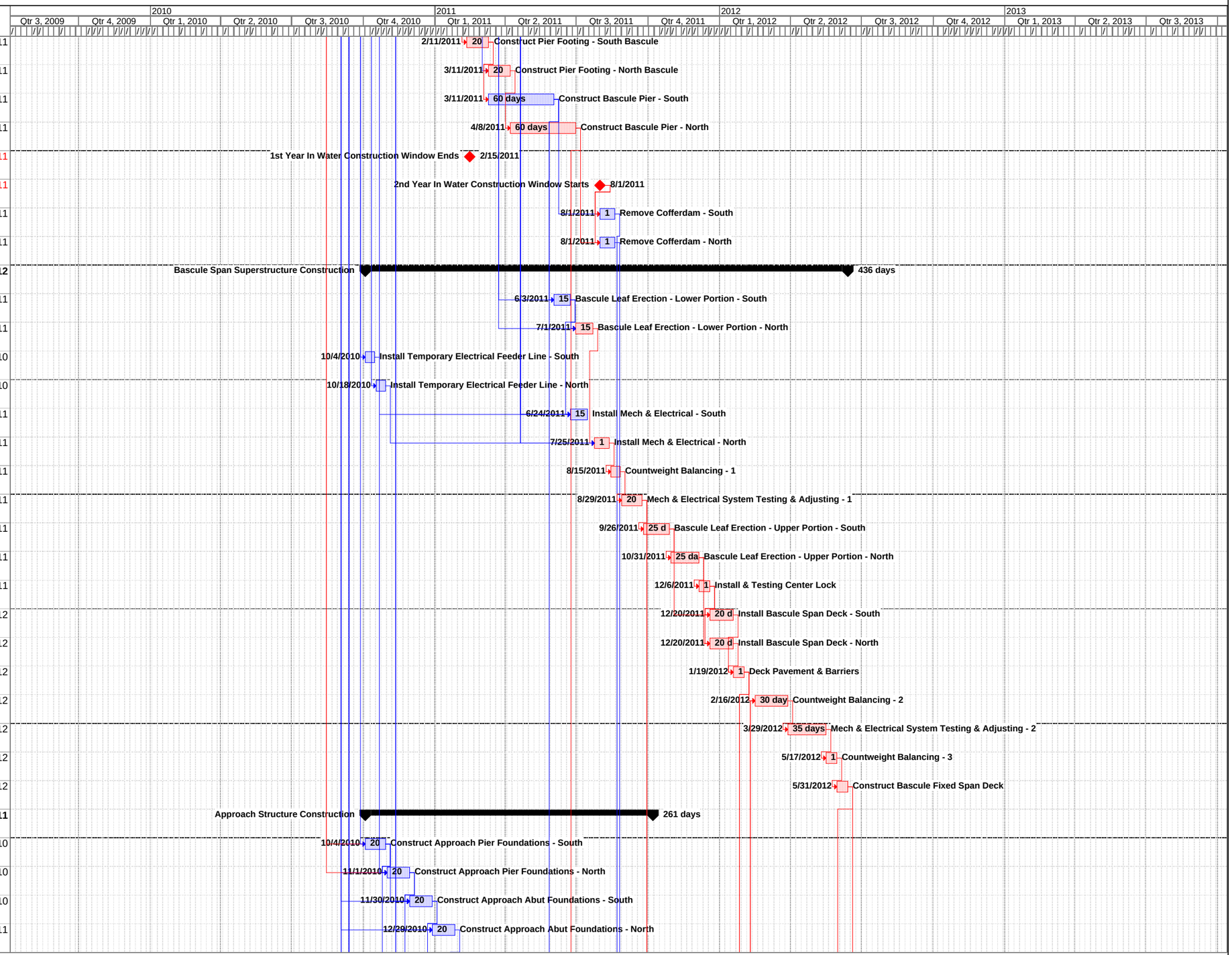

Project: South Park Movable Bridge Co
Date: Fri 8/3/07

Task | Critical Task | Milestone | Rolled Up Task | Rolled Up Milestone | Split | Project Summary | Deadline
Task Progress | Critical Task Progress | Summary | Rolled Up Critical Task | Rolled Up Progress | External Tasks | Group By Summary

South Park Bridge: Proposed Construction Schedule

ID	Notes	Task Name	Duration	Start	Finish
65		Construct Approach Piers - South	30 days	Mon 11/1/10	Mon 12/13/10
66		Construct Approach Piers - North	30 days	Tue 11/30/10	Wed 1/12/11
67		Construct Approach Abut - South	30 days	Wed 12/29/10	Wed 2/9/11
68		Construct Approach Abut - North	30 days	Thu 1/27/11	Wed 3/9/11
69		Approach Span Girder Erection - South	15 days	Fri 6/3/11	Thu 6/23/11
70		Approach Span Girder Erection - North	15 days	Fri 7/1/11	Fri 7/22/11
71		Construct Girder Diaphragms - South	15 days	Fri 6/24/11	Fri 7/15/11
72		Construct Girder Diaphragms - North	15 days	Mon 7/25/11	Fri 8/12/11
73		Construct Approach Deck - South	30 days	Mon 7/18/11	Fri 8/26/11
74		Construct Approach Deck - North	30 days	Mon 8/15/11	Fri 9/23/11
75		Construct Approach Sidewalk & Barriers - South	10 days	Mon 8/29/11	Fri 9/9/11
76		Construct Approach Sidewalk & Barriers - North	10 days	Mon 9/26/11	Fri 10/7/11
77		**Utility Lines**	**109 days**	**Mon 9/12/11**	**Wed 2/15/12**
78		Install Under the Deck Utility Lines - South	10 days	Mon 9/12/11	Fri 9/23/11
79		Install Under the Deck Utility Lines - North	10 days	Mon 10/10/11	Fri 10/21/11
80		**2nd Year In Water Construction Window Ends**	0 days	Wed 2/15/12	Wed 2/15/12
81		**Luminaries, Traffic Signals and Gates**	**10 days**	**Thu 2/2/12**	**Wed 2/15/12**
82		Install Luminaries, Traffic Signals and Gate - South	10 days	Thu 2/2/12	Wed 2/15/12
83		Install Luminaries, Traffic Signals and Gate - North	10 days	Thu 2/2/12	Wed 2/15/12
84		**Remove Construction Trestle for the New Bridge**	**239 days**	**Mon 8/29/11**	**Wed 8/1/12**
85		**3rd Year In Water Construction Window Starts**	0 days	Wed 8/1/12	Wed 8/1/12
86	In Water	Remove Construction Trestle - South	15 days	Mon 8/29/11	Fri 9/16/11
87	In Water	Remove Construction Trestle - North	15 days	Mon 9/26/11	Fri 10/14/11
88		**Construct Approach Roadways**	**50 days**	**Mon 7/18/11**	**Fri 9/23/11**
89		Construct Approach Roadways - South	30 days	Mon 7/18/11	Fri 8/26/11
90		Construct Approach Roadways - North	30 days	Mon 8/15/11	Fri 9/23/11
91		**Diverting Traffic to the New Bridge**	0 days	Wed 6/13/12	Wed 6/13/12
92		**Remove Existing Structures**	**313 days**	**Mon 9/19/11**	**Mon 12/3/12**
93	In Water	Remove Existing Fender - South	15 days	Mon 9/19/11	Fri 10/7/11
94	In Water	Remove Existing Fender - North	15 days	Mon 10/17/11	Fri 11/4/11
95	In Water	Drive Steel Piles for Construction Trestle - South	30 days	Mon 9/19/11	Fri 10/28/11
96	In Water	Drive Steel Piles for Construction Trestle - North	30 days	Mon 10/17/11	Mon 11/28/11

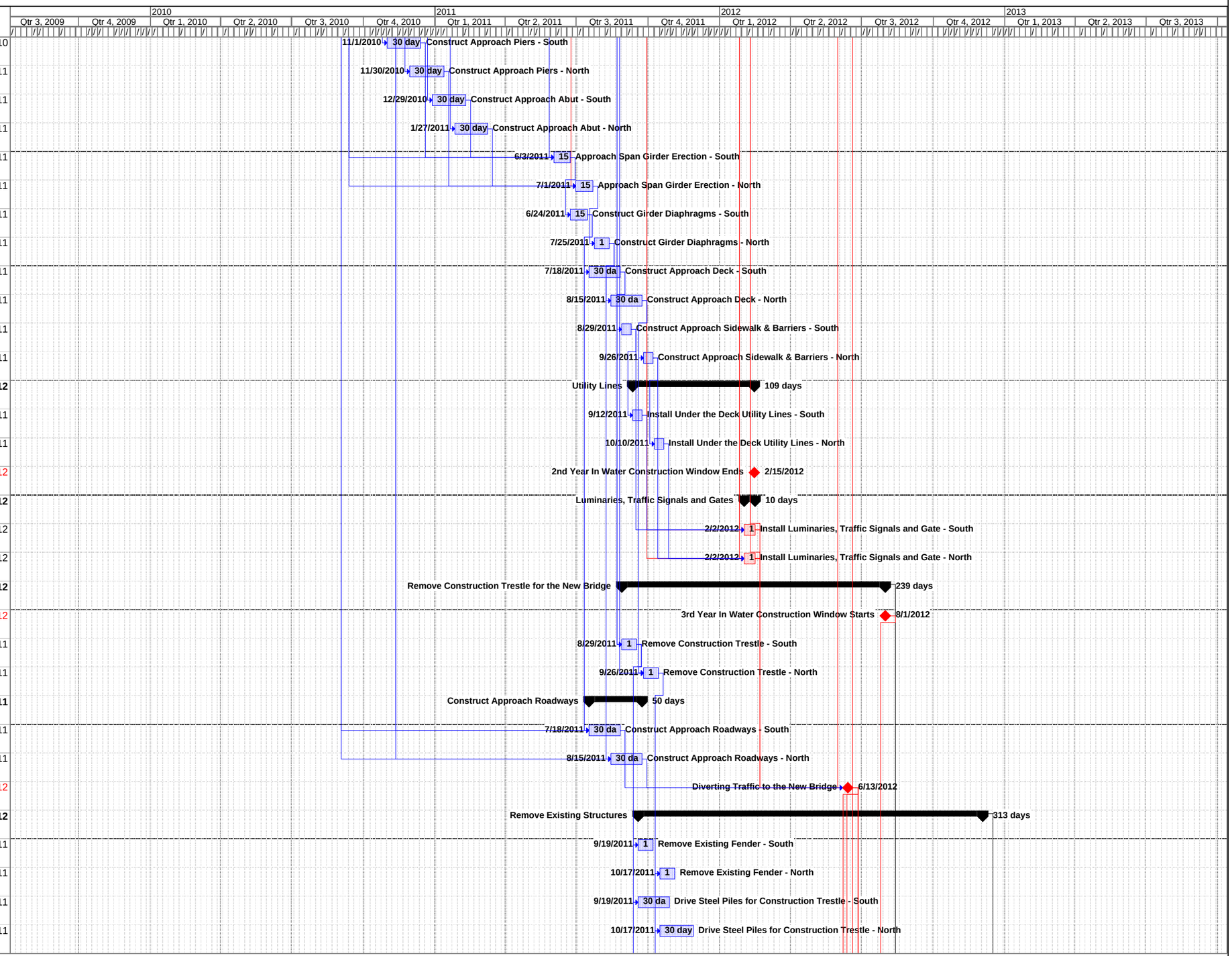

Project: South Park Movable Bridge Co
Date: Fri 8/3/07

Task | Critical Task | Milestone | Rolled Up Task | Rolled Up Milestone | Split | Project Summary | Deadline
Task Progress | Critical Task Progress | Summary | Rolled Up Critical Task | Rolled Up Progress | External Tasks | Group By Summary

South Park Bridge: Proposed Construction Schedule

ID	Notes	Task Name	Duration	Start	Finish
97	In Water	Constructing Trestle Deck - South	25 days	Mon 9/26/11	Fri 10/28/11
98	In Water	Constructing Trestle Deck - North	25 days	Mon 10/24/11	Mon 11/28/11
99		Remove Existing Bascule Leaf Deck - South	15 days	Thu 6/14/12	Wed 7/4/12
100		Remove Existing Bascule Leaf Deck - North	15 days	Tue 6/19/12	Mon 7/9/12
101		Remove Existing Bascule Leaf - South	30 days	Thu 7/5/12	Wed 8/15/12
102		Remove Existing Bascule Leaf - North	30 days	Tue 7/10/12	Mon 8/20/12
103		Remove Existing Mech & Electrical System - South	5 days	Thu 8/16/12	Wed 8/22/12
104		Remove Existing Mech & Electrical System - North	5 days	Tue 8/21/12	Mon 8/27/12
105		Remove Existing Appro. Spans & Upper Bascule Pier -	30 days	Thu 8/23/12	Wed 10/3/12
106		Remove Existing Appro. Spans & Upper Bascule Pier -	30 days	Tue 8/28/12	Mon 10/8/12
107	In Water	Construct Exist. Bascule Pier Cofferdam - South	25 days	Thu 9/27/12	Wed 10/31/12
108	In Water	Construct Exist. Bascule Pier Cofferdam - North	25 days	Tue 10/2/12	Mon 11/5/12
109		Remove Existing Lower Bascule Pier - South	10 days	Thu 11/1/12	Wed 11/14/12
110		Remove Existing Lower Bascule Pier - North	10 days	Tue 11/6/12	Mon 11/19/12
111		Remove Existing Bascule Pier Foundation - South	10 days	Thu 11/15/12	Wed 11/28/12
112		Remove Existing Bascule Pier Foundation - North	10 days	Tue 11/20/12	Mon 12/3/12
113	In Water	Remove Exist Approach Piers - South	10 days	Thu 10/4/12	Wed 10/17/12
114	In Water	Remove Exist Approach Piers - North	10 days	Tue 10/9/12	Mon 10/22/12
115	In Water	Remove Exist Approach Piers Foundations - South	10 days	Thu 10/18/12	Wed 10/31/12
116	In Water	Remove Exist Approach Piers Foundations - North	10 days	Tue 10/23/12	Mon 11/5/12
117		**Construct New Fender System & Remove Trestles**	**114 days**	**Wed 8/1/12**	**Mon 1/7/13**
118	In Water	Construct Part of New Fender System - South	15 days	Wed 8/1/12	Tue 8/21/12
119	In Water	Construct Part of New Fender System - North	15 days	Wed 8/22/12	Tue 9/11/12
120	In Water	Remove Construction Trestle & Cofferdam- South	15 days	Thu 11/29/12	Wed 12/19/12
121	In Water	Remove Construction Trestle & Cofferdam - North	15 days	Tue 12/4/12	Mon 12/24/12
122	In Water	Complete Construct New Fender System - South	15 days	Thu 12/13/12	Wed 1/2/13
123	In Water	Complete Construct New Fender System - North	15 days	Tue 12/18/12	Mon 1/7/13
124		**Cleaning & Site Preparation**	10 days	Tue 1/8/13	Mon 1/21/13
125		**Contractor Demobilization**	19 days	Tue 1/22/13	Fri 2/15/13
126		**3rd Year In Water Construction Window Ends**	0 days	Fri 2/15/13	Fri 2/15/13

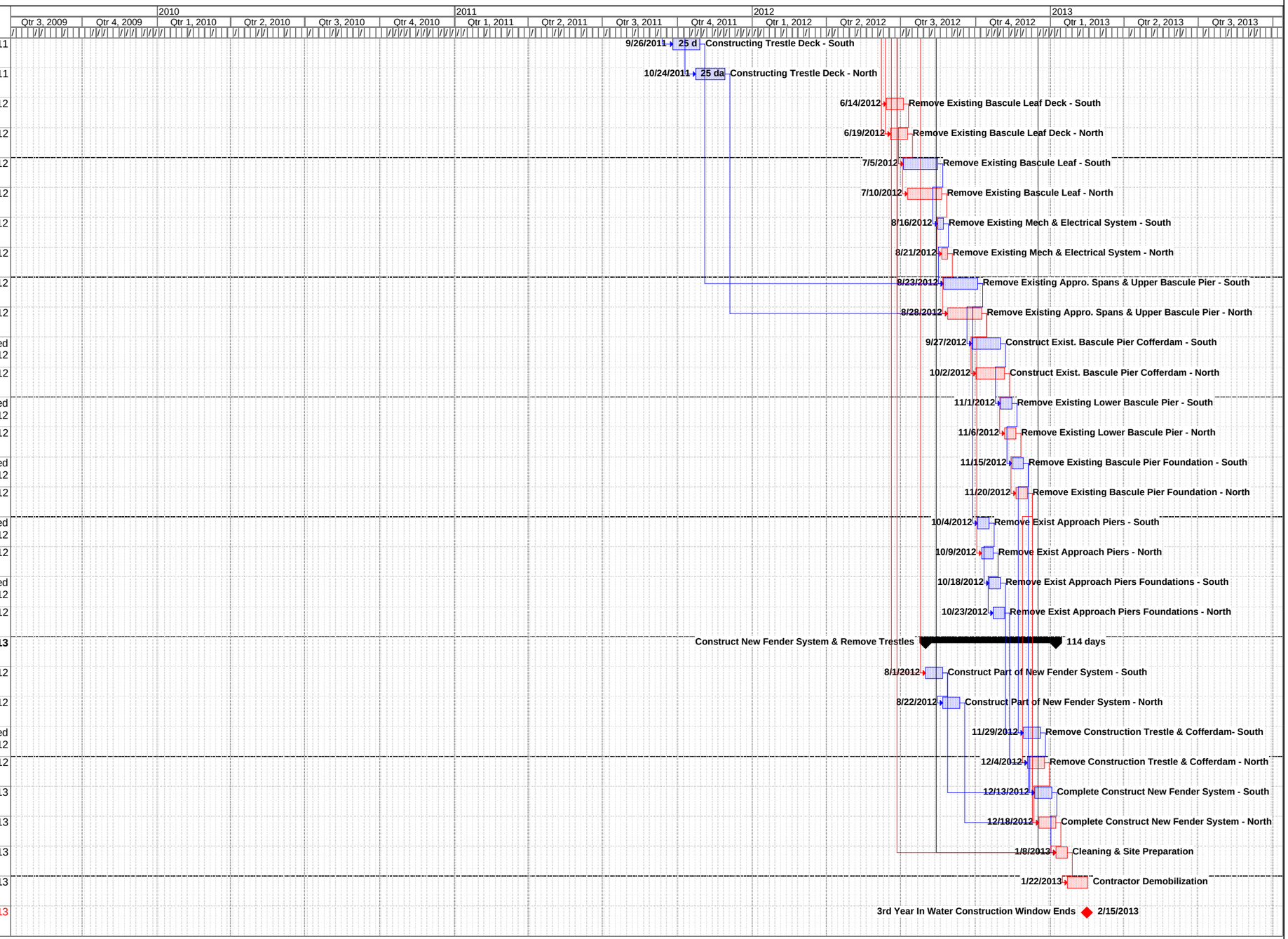

Project: South Park Movable Bridge Co
Date: Fri 8/3/07

Task | Critical Task | Milestone | Rolled Up Task | Rolled Up Milestone | Split | Project Summary | Deadline
Task Progress | Critical Task Progress | Summary | Rolled Up Critical Task | Rolled Up Progress | External Tasks | Group By Summary

Bascule Bridge Parametric Study

Appendix F

Bottom of Pier Elevation Study

March, 2007

King County
South Park Bascule Bridge
Estimate

Attachment 2
Bottom of Pier Elevation
Option A vs Option C

William Ott
by Bruce Jamieson
03/04/07

Description of work:
Option A - Longer span with shallower pier out side of navigation channel
Option C - Shorter span with deeper pier to clear navigation channel

Discussion
The option for a longer span will increase each leaf by approximately 12' and decrease the approach span by the same amount as the bascule pier is moved away from the center of the channel. The increased length of movable span will cause an increase in counterweight because of the increased weight and greater moment arm for the movable leaf. A slight increase in the cost of the mechanical compents should also be expected due to the increase in rotating mass.

The option that raises the bottom of the pier results in a substantial reduction in the work involved to install, excavate and dewater the cofferdam. Also by raising the bottom slab elevation but maintaining the deck elevation the size of the sturcture is decreased. If the tip elevation of the piling stays the same for both options then the total length of pile will be increased by raising the bottom of the pier.
The shallower option has the top of the bottom slab at elevation 8.93', the deeper option has the top of the bottom slab at elevation -19.5 resulting in 28.5' difference.
The seal changes from 3' thick to 19' thick which results in a bottom of excavtion at elevation -45.

Option "**A**" Increased Span length

Description of difference	Quantity Difference **	Unit of Measure	Unit Cost	Amount	Comment
Increased Span area	804	SF	$ 515	$ 414,060	Each bascule leaf is approximately 12' longer in this option. The width is 67'. Deck at $115, and steel truss at $400/sf
Increase cost of span due to length	804	SF	$ 80	$ 64,320	The leaf is a longer cantilever and therefore the incremental cost of the increase is greater than the average cost.
Increased Counter weight	250000	LBS	$ 1.50	$ 375,000	Due to the increased weight and moment arm of the bascule leaf the counter weight will increase. Estimate that the Span will increase by 120,000 lbs and the cwt will increase by 250,000 lbs.
Increase cost of mechanical	200000	LS	$ 1.00	$ 200,000	Allowance for increases in mechancal gear due to increase rotating mass.
Fill in bottom of cofferm	818	CY	$ 100	$ 81,778	Temporary gravel fill or light weight concrete below the seal. Estimate that it will average 4', from approx -6' to -2.5' in elevation, cofferdam is 92' x 60'
Decrease in approach span	-804	SF	$ 150	$ (120,600)	Approach spans are shortened 12' as the bascule pier is moved away from the center of the navigation channel, however no reduction in foundation costs so use $150/sf instead of average $175/sf
	Total to increase length of bascule span			$ 1,014,558	per span

King County
South Park Bascule Bridge
Estimate

Bottom of Pier Elevation
Option A vs Option C

William Ott
by Bruce Jamieson
03/04/07

Option "**C**" Increased Pier depth

Description of difference	Quantity Difference **	Unit of Measure	Unit Cost	Amount	Comment
Increased cofferdam sheet pile	5776	SF	$ 25	$ 144,400	Cofferdam in 92' x 60', perimeter is 304', the tip elevation of the sheet pile is15' below bottom of excavation. The deeper option is 39' deeper than the shallow design. Incremental cost of 75' sheets instead of 40' long
Additional coffedam bracing	3	EACH	$ 50,000	$ 150,000	The additional 39' of retained height will require 3 more layers of internal bracing to handle the increase hydraulic head. Estimate 80,000 lbs of steel per layer - used steel
Dredging of Cofferdam (excavation)	7,973	CY	$ 25	$ 199,333	Cofferdam area is 5,520 sf. No excavation is required for shallow option. Deeper option requires 39' of excavation from elevation -6 to -45. Hazardous materials, if any not considered.
Increased Seal Concrete	3,271	CY	$ 300	$ 981,333	Cofferdam seal increases from 3' to 19'.
Increased Dewatering	40000	LS	$ 1.00	$ 40,000	The quantity of water to be removed and the amount to be handled during the maintenance of the dewatered state increases by 2,000,000 gallons
Increased Structural Concrete	1330	CY	$ 650	$ 864,500	The additional 28.5 of pier height is estimated to be approx 420LF of 3' thick wall.
Decreased in length of piling	-2850	LF	$ 200	$ (570,000)	Estimating 100 each pile (No change in numbers between options at this time) and a pile tip elevation that is the same the length of the pile decreases by 28.5' each
Increase in construction Schedule	5	Weeks	$ 50,000	$ 250,000	Additional excavation: 3 weeks, seal and extra Cofferdam work: 1 week, extra concrete work 1 week. = 5 weeks
	Total increase cost of deeper pier			$ 2,059,567	per pier

Cost difference between longer span and deeper pier	$ 1,045,009	Deeper pier costs more
Number of piers/leafs	2	
Total cost increase for deeper pier verse longer bascule spans	$ 2,090,018	Longer spans & shallower pier cost less

Bascule Bridge Parametric Study March, 2007

Areas of the design identified for evaluation are:

- **Design Issues and Comparisons:**
  Structural type: Bascule Trunnion vs. Scherzer Rolling Lift
  Issues considered relate to the effect of type selection on the span length, the seismic vulnerability, speed of operation, and maintenance issues. Refer to Figures 1 & 2
- **Design Issues and Comparisons**: Span Layout
  This presents an overview of the previous study comparing the deeper footing and shorter span option with the shallower footing, longer span option. Refer to Figures 1 & 2
- **Design Issues and Comparisons:** Pier Protection
  The issue considered here is the effect of the "span layout" options on the pier protection system. Refer to Figure 4.
- **Design Issues and Comparisons:** Bascule Truss Spacing
  Issues in this section relate to the effects of varying the horizontal spacing of the main bascule trusses. Mostly, geometric effects are considered here. Refer to Figure 3 for a graphic explanation of how the envelope required to open the leaf varies as a function of truss spacing.
- **Design Issues and Comparisons:** Bascule Pier Size
  This evaluation considers the effects of varying the width of the bascule pier. It was suggested that the mass of the pier, and hence seismic force could be reduced by making the pier narrower. This must be balanced against the advantages of general stability, and more room for shafts/piles under the footing if the pier is wider. Refer to Figure 4 and Table 1 in the attached supporting documents.
- **Design Issues and Comparisons:** Bascule Foundation Type
  This evaluation catalogs a few effects of using larger vs. smaller piles
- **Design Issues and Comparisons:** Machinery Layout
  Would the span drive machinery be affected if the pier corner were clipped to reduce the bascule truss span?
- **Opening Angle**
  The attached spreadsheet "Maximum Opening Angle" calculates the required opening angle to achieve the necessary clear channel opening for both the Trunnion and Scherzer Rolling Lift type bascule bridge.

The supporting drawings and tabulated data for this study are presented in the following pages

South Park Bridge Design Issues and Comparisons

Y. Yang

3/8/2007

Structural Type, Rolling Lift vs. Trunnion	Scherzer Rolling	Trunnion	Ref
Structural length from back of bascule wall to mid-span	About Same	About Same	Figure 1
Has it been constructed in high seismic risk area lately?	Not found	A few	
Operation (Max. opening angle)	Faster	Slower	Attachment 1-1 & 1-2
Wearing at the support tread plates	Yes	No	"Movable Bridge Engineering" Terry Koglin, pp 47
Live load supports	Rear	Front	Figure 1
Span Layout	**Deeper Footing**	**Raised Footing**	**Ref**
Corp Eng permit required (For footing under current channel)?	May be	No	
Construction cost diff. (Use 0 dollars for raised footing)	$1,045,009	0	Attachment 2
Top of footing elevation (NAV 88)	-19.5	8.9	Figure 1 & 2
Seal thickness	19 ft	3 ft	Figure 1 & 2
In water excavation	Yes	Min.	Figure 1 & 2
Cantilever bascule leaf length	92 ft	104 ft	Figure 1, 2 & 4
Water width behind the bascule pier	more	less	Figure 4
Pier Protection			
Clearance to pier protection	0	2 ft +/-	Figure 4
Space for pier protection battered piles	Difficult	Better	Figure 4
Bascule Truss Spacing	**Narrow**	**Wider**	**Ref**
Deck overhang	Longer	Shorter	Figure 3
Seismic induced shear forces on trunnion bearing	Larger	Smaller	
Counterweight length	Longer	Shorter	
Counterweight pit depth	Deeper	Shallower	
Bascule pier longitudinal dimension	Longer	Shorter	
Floor beam between trusses	Shorter	Longer	Figure 3
Bascule Pier Size	**Narrow**	**Wider**	**Ref**
Mech.& Elec. system on both outside of the trusses (opt 5)	Not Feasible	Feasible	
Pier interior space	Smaller	Larger	Figure 3
Longitudinal joints on roadway deck	May require	Not required	
Open pier side wall for deck in open position	May require	Not required	
Footing Size Comparison	See Table 1	See Table 1	Table 1
Bascule Foundation Type	**Larger Piles**	**Smaller Piles**	**Ref**
Impact on structural fundamental period	Shorter	Longer	
Impact on seismic force demand	Larger	Smaller	
Pile structural capacity	Higher	Lower	
Pile drivability	More difficult	Easier	
Pile driving impact on existing footings	More	Less	
Preliminary Plan Requirement by WSDOT			Attachment 3 - WSDOT Sample Plans
Machinery Layout	**Btw Trusses**	**Outside Trusses**	**Ref**
Clip the footing corner to reduce the span length?	Yes	No	Figure 5 & Attachment 4

NOTE:
FOR COMPARISON PURPOSES, THE FOOTING WIDTH OF THE TRUNNION AND ROLLING LIFT ARE ASSUMED TO BE THE SAME.

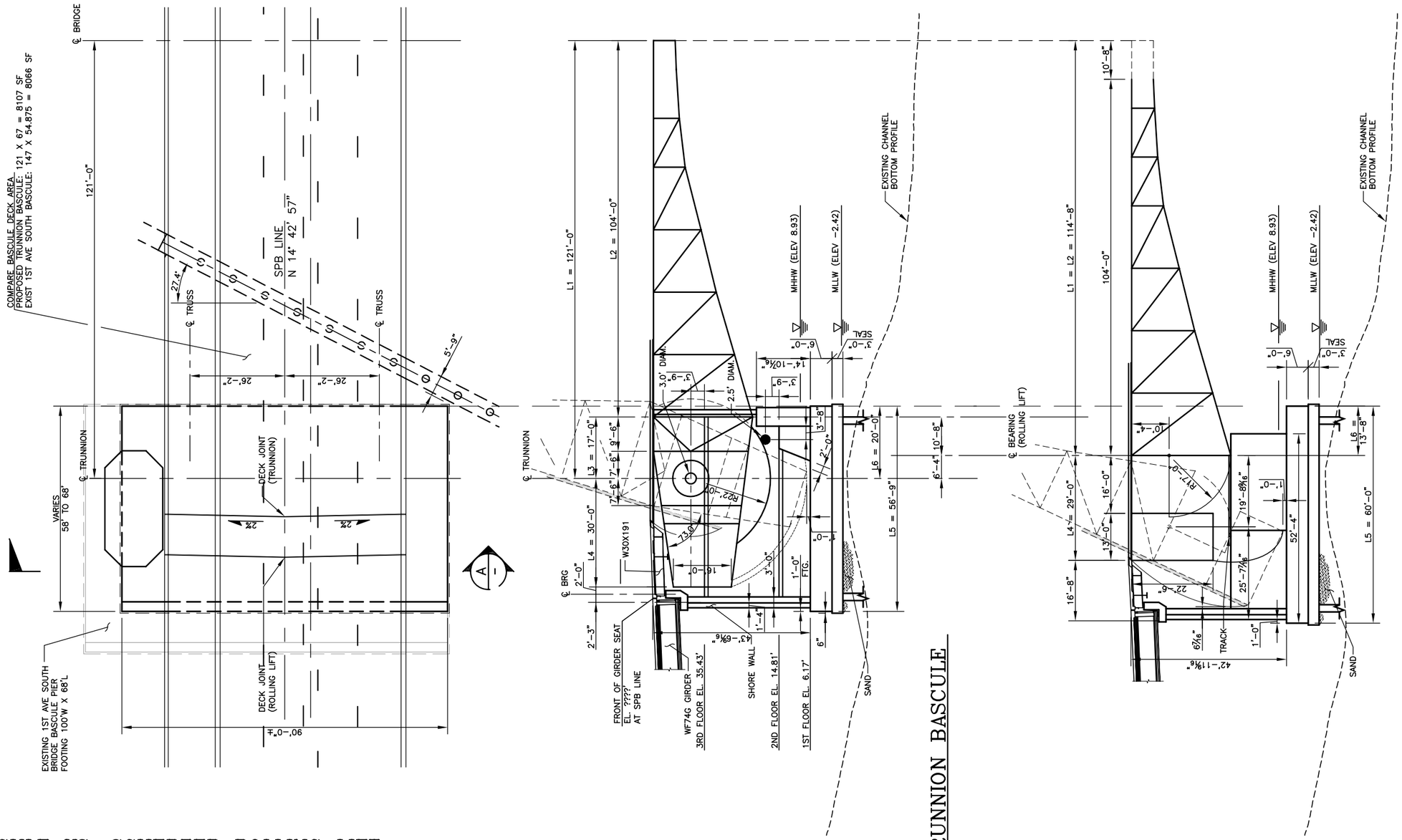

FIG. 1

TRUNNION BASCULE VS. SCHERZER ROLLING LIFT
SHALLOW FOUNDATION OPTION
STUDY "A"

CALL 2 WORKING DAYS BEFORE YOU DIG
1-800-424-5555
(UNDERGROUND UTILITY LOCATIONS ARE APPROX.)

FIELD BOOK:	NUM.	REVISION	BY	DATE
SURVEYED:				
SURVEY BASE MAP:				
DESIGN ENTERED:				
DESIGNED				
CHECKED:				
SUPERVISOR:				

PB
PBQD, INC 100 YEARS
999 THIRD AVE. #2200
SEATTLE, WA 98104

FED. AID No.
PROJECT No. 300197
SURVEY No. 32-24-4-22
MAINTENANCE DIVISION No.

KING COUNTY DEPT. OF TRANSPORTATION
HAROLD TANIGUCHI, DIRECTOR
SOUTH PARK BRIDGE #3179
REPLACEMENT
LAYOUT STUDY

King County

SHEET OF 59 SHEETS

J:\2531757 S Park Movable Br\CADD\STRC\SHT\SPK-LAYOUT_STUDY_A 0226.dwg Aug 14, 2007 - 9:49am

NOTE:
FOR COMPARISON PURPOSES, THE FOOTING WIDTH OF THE TRUNNION AND ROLLING LIFT ARE ASSUMED TO BE THE SAME.

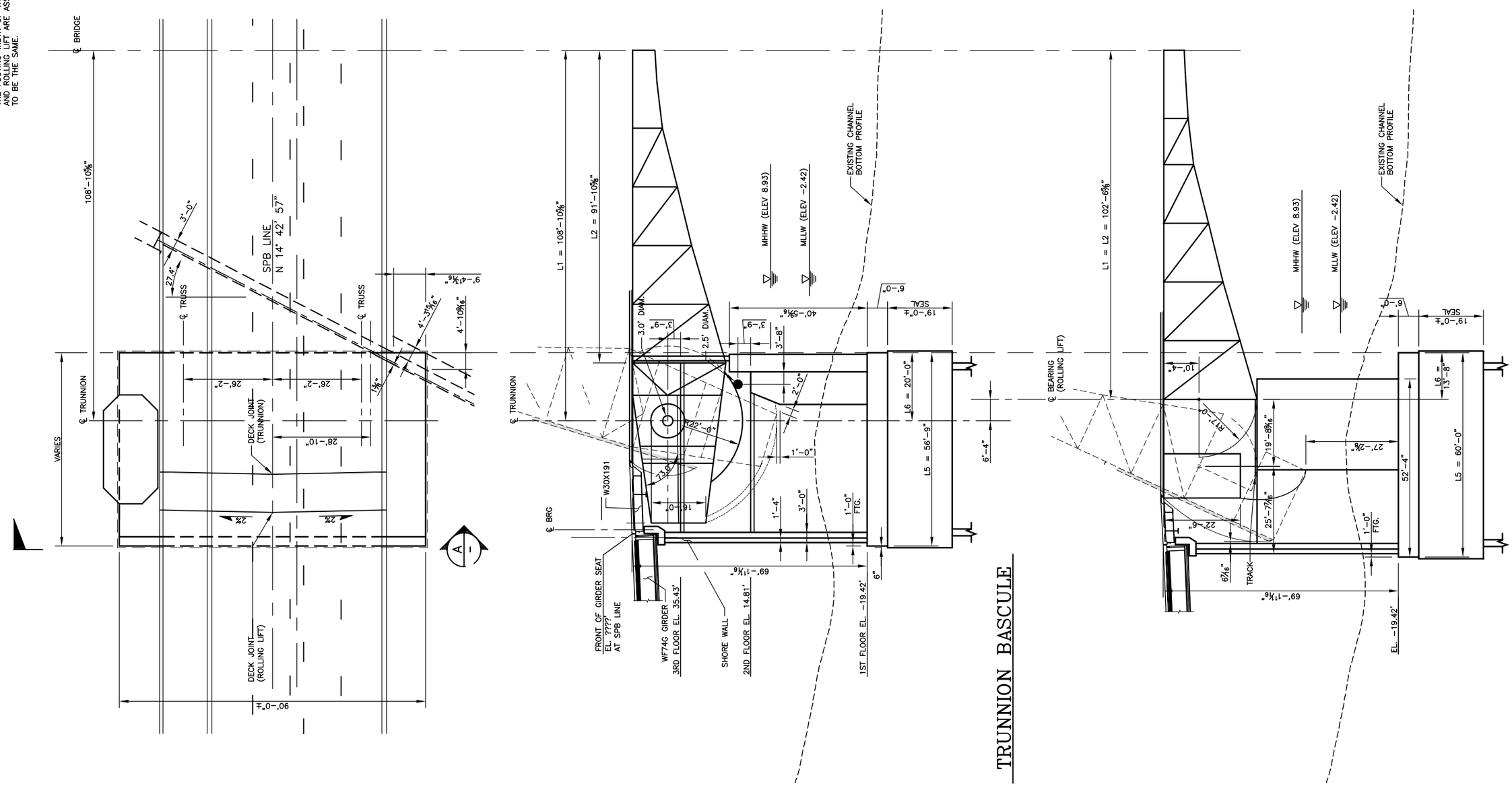

FIG. 2

TRUNNION BASCULE VS. SCHERZER ROLLING LIFT
DEEP FOUNDATION OPTION
STUDY "C"

CALL 2 WORKING DAYS BEFORE YOU DIG
1-800-424-5555
(UNDERGROUND UTILITY LOCATIONS ARE APPROX.)

FIELD BOOK:	NUM.	REVISION	BY	DATE
SURVEYED:				
SURVEY BASE MAP:				
DESIGN ENTERED:				
DESIGNED				
CHECKED:				
SUPERVISOR:				

PB 100 YEARS
PBQD, INC
999 THIRD AVE. #2200
SEATTLE, WA 98104

FED. AID No.
PROJECT No. 300197
SURVEY No. 32-24-4-22
MAINTENANCE DIVISION No.

KING COUNTY DEPT. OF TRANSPORTATION
HAROLD TANIGUCHI, DIRECTOR
SOUTH PARK BRIDGE #3179
REPLACEMENT
LAYOUT STUDY

King County

SHEET OF 59 SHEETS

J:\253757 S Park Movable Br\CADD\STRC\SHT\SPK-LAYOUT_STUDY_C 0228.dwg Aug 14, 2007 - 9:49am

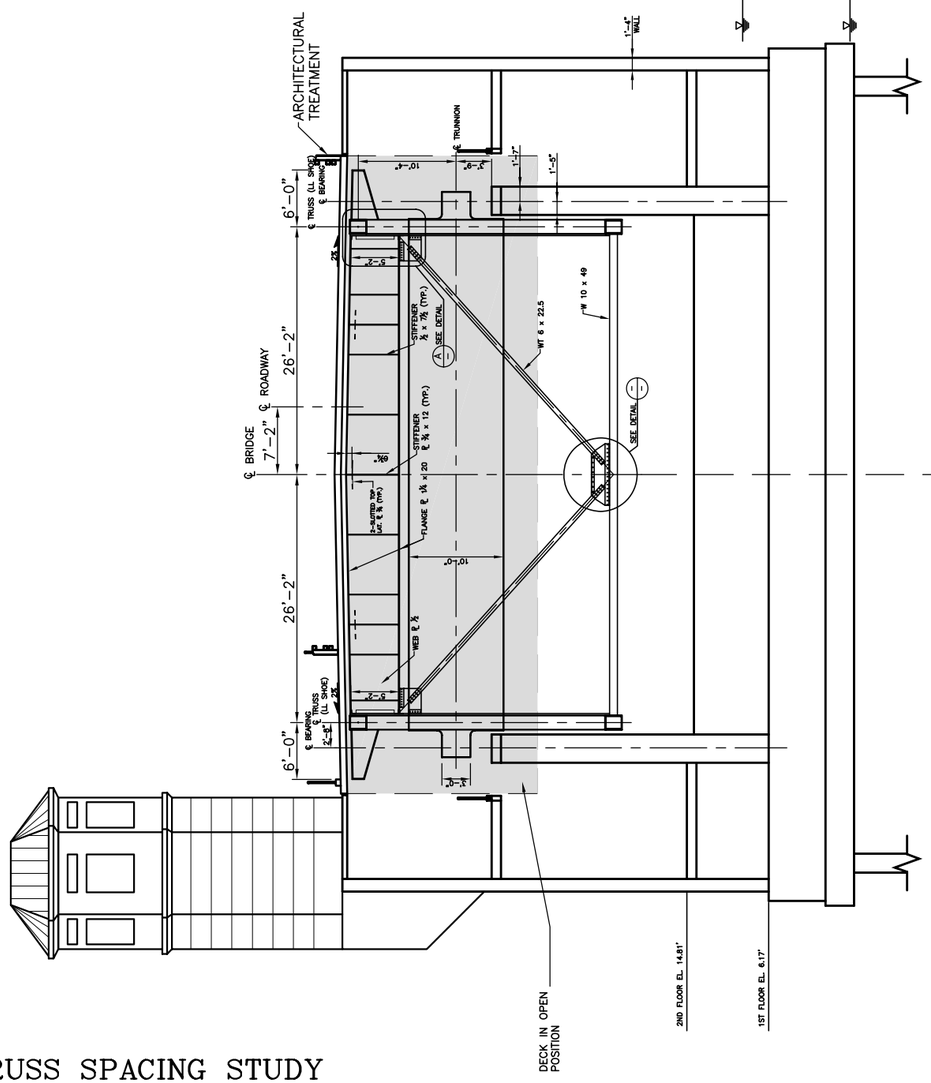

A SECTION

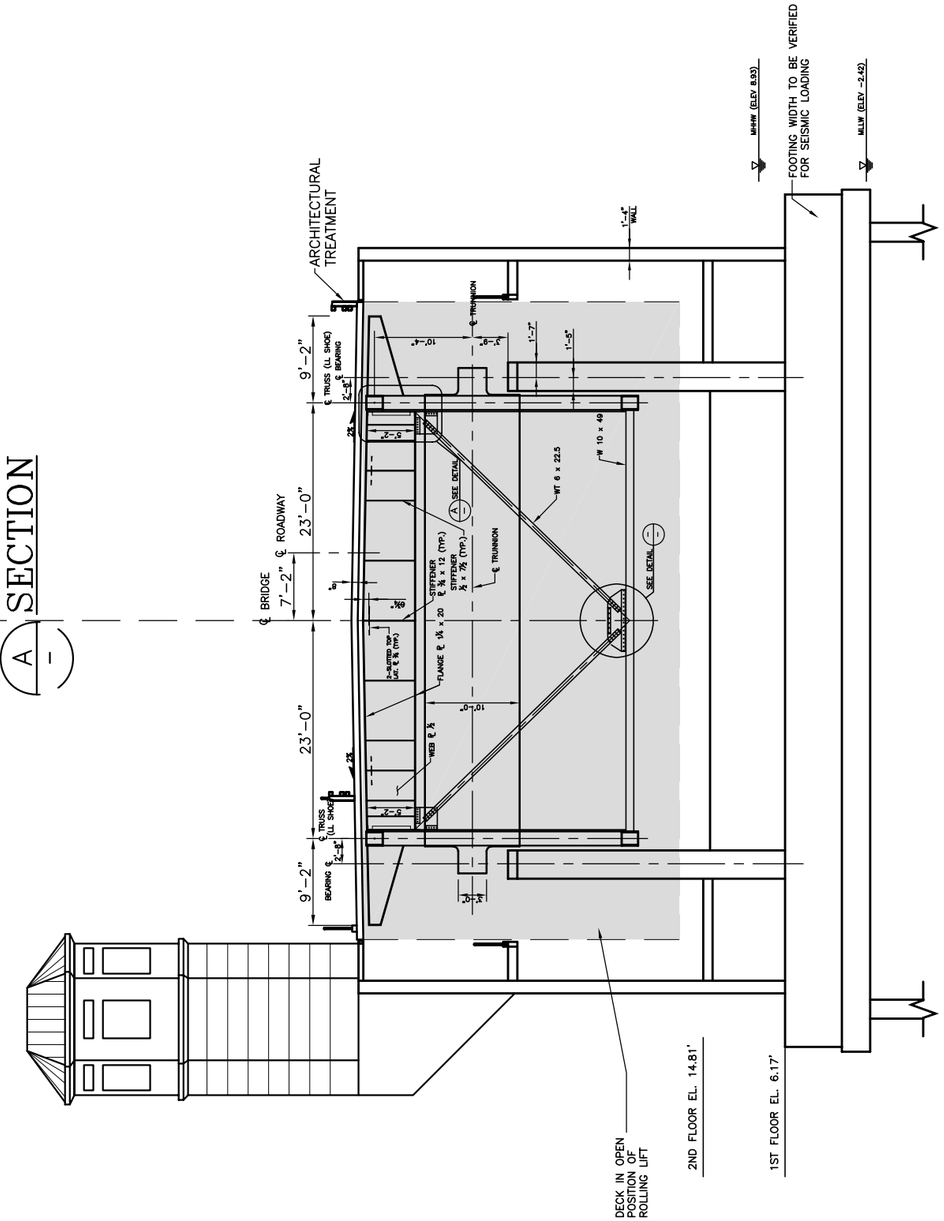

A SECTION (NARROW)

TRUNNION BASCULE SHOWN
ROLLING LIFT BASCULE SIMILAR

FIG. 3

TRUSS SPACING STUDY
OPEN POSITION ENVELOPE

CALL 2 WORKING
DAYS BEFORE YOU DIG
1-800-424-5555
(UNDERGROUND UTILITY LOCATIONS ARE APPROX.)

FIELD BOOK:
SURVEYED:
SURVEY BASE MAP:
DESIGN ENTERED:
DESIGNED
CHECKED:
SUPERVISOR:

NUM.	REVISION	BY	DATE

PB
PBQD, INC 100 YEARS
999 THIRD AVE. #2200
SEATTLE, WA 98104

FED. AID No.
PROJECT No. 300197
SURVEY No. 32-24-4-22
MAINTENANCE DIVISION No.

KING COUNTY DEPT. OF TRANSPORTATION
HAROLD TANIGUCHI, DIRECTOR
SOUTH PARK BRIDGE #3179
REPLACEMENT

King County

SHEET
OF
59
SHEETS

J:\2531757 S Park Movable Br\CADD\STRC\SHT\SPK-LAYOUT_STUDY_B 0226.dwg Aug 14, 2007 - 9:48am

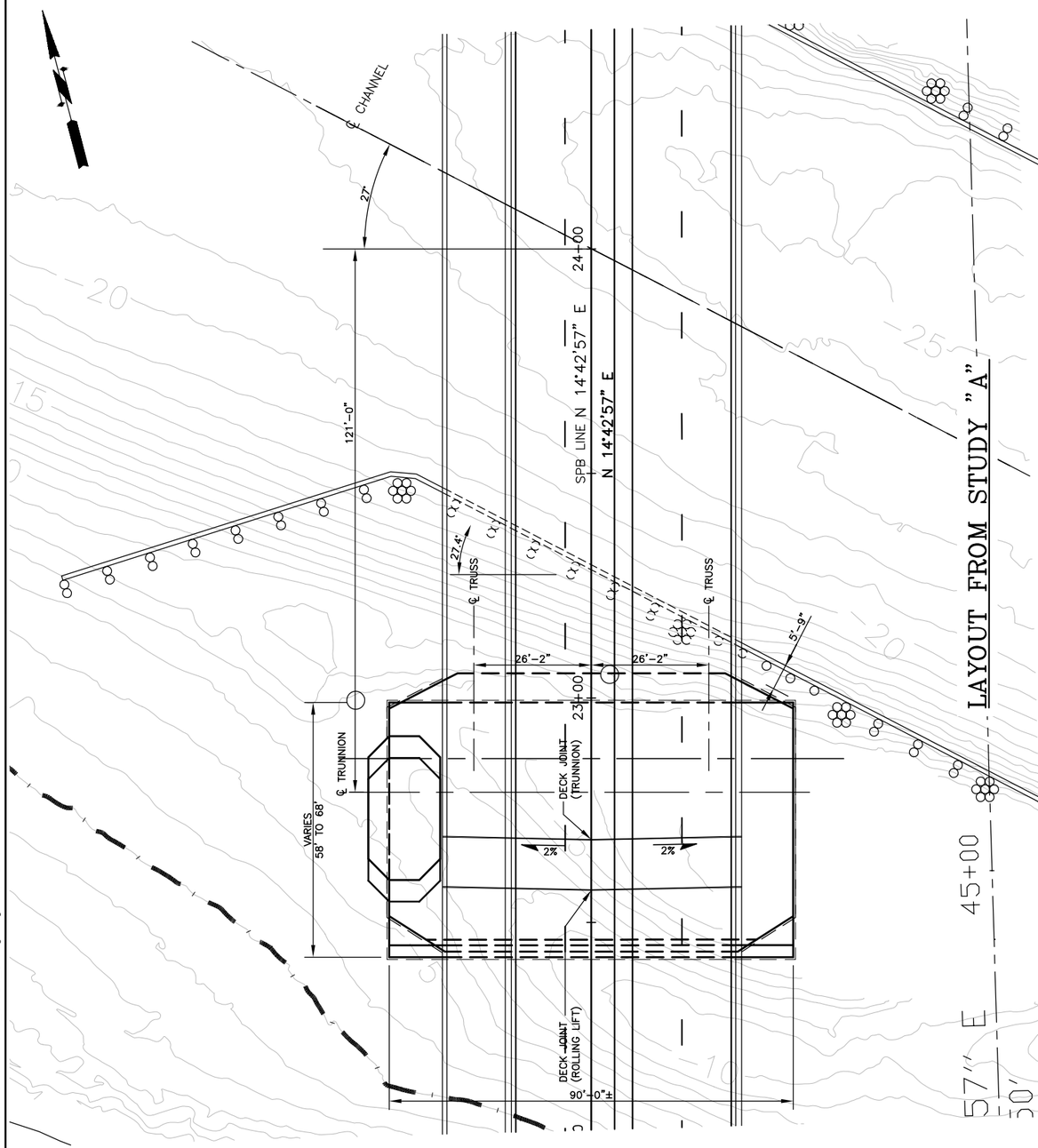

LAYOUT FROM STUDY "A"

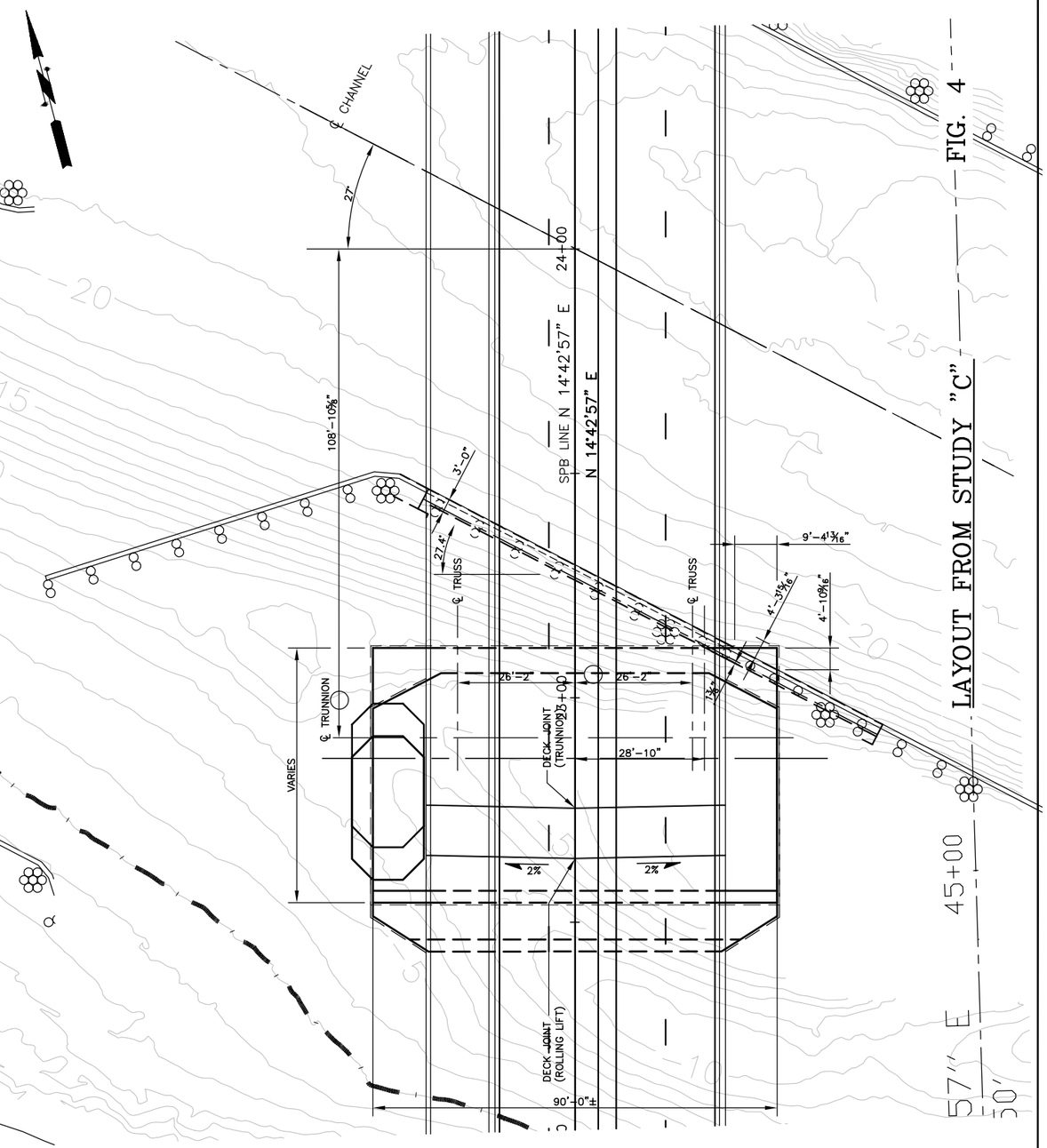

LAYOUT FROM STUDY "C"

FIG. 4

TRUNNION BASCULE VS. SCHERZER ROLLING LIFT
SHALLOW VS. DEEP FOUNDATION, PLAN VIEW

CALL 2 WORKING
DAYS BEFORE YOU DIG
1-800-424-5555
(UNDERGROUND UTILITY LOCATIONS ARE APPROX.)

J:\25317S7 S Park Movable Br\CADD\STRC\SHT\SPK-LAYOUT_STUDY_D.dwg Aug 14, 2007 - 9:47am

FIELD BOOK:
SURVEYED:
SURVEY BASE MAP:
DESIGN ENTERED:
DESIGNED
CHECKED:
SUPERVISOR:

NUM.	REVISION	BY	DATE

PBQD, INC 100 YEARS
999 THIRD AVE. #2200
SEATTLE, WA 98104

FED. AID No.
PROJECT No. 300197
SURVEY No. 32-24-4-22
MAINTENANCE DIVISION No.

KING COUNTY DEPT. OF TRANSPORTATION
HAROLD TANIGUCHI, DIRECTOR
SOUTH PARK BRIDGE #3179
REPLACEMENT

King County

SHEET
OF
59
SHEETS

KC South Park Bridge Replacement
Structural Type and Layout Study Y.Yang 3/5/2007

Table 1
Bascule Bridge Footing Size Comparison

			Exist SPB	Study SPB Rolling Lift	Proposed SPB Trunnion	1st Ave South
Year of Construction			1930	?	?	1995
Type			Scherzer	Scherzer	Trunnion	Trunnion
Seismic Design Return Period		Yrs.	?	975	975	475
Deck Width	W1	ft	50.00	64.33	64.33	53.00
Deck Overhang Width	W2	ft	6.00	9.17	4.50	0.00
Bascule Deck Area (W1x L1)	A1	ft^2	4750.00	7376.88	7784.33	7791.00
Trunnion (Bearing) to Midspan	L1	ft	95.00	114.67	121.00	147.00
Bascule Leaf Cantilever	L2	ft	95.00	114.67	104.00	125.50
Bascule Footing Length	L5	ft	46.00	60.00	57.00	68.00
Bascule Footing Width	W3	ft	65.67	90.00	90.00	100.00
Trunnion to Front of Footing	L6	ft	11.33	13.67	20.00	22.75
Bascule Footing Area (L5 x W3)	A2	ft^2	3020.66	5400.00	5130.00	6800.00
W3/W1			131.33%	139.90%	139.90%	188.68%
Bascule Footing vs. Deck Area (A2/A1)		%	63.59%	73.20%	65.90%	87.28%
L6/L1			11.93%	11.92%	16.53%	15.48%

KC South Park Bridge Replacement
Structural Type and Layout Study Y. Yang 2/22/2007

Maximum Opening Angle

			Trunnion			Rolling		
L1	ft		121.000			114.500		
H1	ft		6.000			6.000		
L6	ft		20.000			13.667		
Trunnion to Top Chord	ft		10.333			10.333		
Trunnion to Tip	ft		121.078			114.582		
Initial Angle	Rad		0.035797			0.037828		
Rack Radius	ft		22.000			17.389		

Open Angle

Deg	Rad		Hori Project	Cantilever		Roll Back	Hori Project	Cantilever
60.00	1.047198		56.747	36.747		18.210	53.497	21.621
61.00	1.064651		54.872	34.872		18.513	51.721	19.541
62.00	1.082104		52.980	32.980		18.817	49.928	17.445
63.00	1.099557		51.072	31.072		19.120	48.121	15.334
64.00	1.117011		49.148	29.148		19.424	46.299	13.208
64.25	1.121374		48.665	28.665		19.500	45.841	12.675
64.50	1.125737		48.181	28.181		19.575	45.382	12.140
64.75	1.130101		47.696	27.696		19.651	44.923	11.605
64.95	1.133591		47.307	27.307		19.712	44.555	11.176
65.00	1.134464		47.210	27.210		19.727	44.462	11.069
65.13	1.136646		46.966	26.966		19.765	44.232	10.800
65.25	1.138827		46.723	26.723		19.803	44.001	10.532
65.50	1.143191		46.235	26.235		19.879	43.539	9.994
65.75	1.147554		45.746	25.746		19.955	43.076	9.455
66.00	1.151917		45.257	25.257		20.031	42.613	8.915
66.50	1.160644		44.275	24.275		20.182	41.683	7.834
67.00	1.169371		43.290	23.290		20.334	40.750	6.749
67.60	1.179843		42.103	22.103		20.516	39.626	5.443
68.00	1.186824		41.310	21.310		20.638	38.875	4.570
68.50	1.195551		40.315	20.315		20.789	37.933	3.476
69.00	1.204277		39.317	19.317		20.941	36.988	2.380
69.50	1.213004		38.316	18.316		21.093	36.040	1.280
70.00	1.221730		37.313	17.313		21.245	35.089	0.178
70.50	1.230457		36.306	16.306		21.396	34.136	-0.927
71.00	1.239184		35.297	15.297		21.548	33.180	-2.035
71.50	1.247910		34.285	14.285		21.700	32.222	-3.145
72.00	1.256637		33.270	13.270		21.852	31.261	-4.257
72.25	1.261000		32.762	12.762		21.928	30.780	-4.814
72.50	1.265364		32.253	12.253		22.003	30.298	-5.372
72.75	1.269727		31.743	11.743		22.079	29.816	-5.930
73.00	1.274090		31.233	11.233		22.155	29.333	-6.489
74.00	1.291544		29.187	9.187		22.459	27.395	-8.730
80.00	1.396263		16.744	-3.256		24.280	15.615	-22.331

Bascule Bridge Parametric Study

March, 2007

Comparison of existing bridge designs:

The following chart is intended to quantify the principal design features of a number of bascule bridges in America. The intent of this study is threefold:

- Identify what the design drivers are for bascule bridges.

- Verify that the design being proposed is consistent with other bridges that have been built and are performing well.

- Identify areas of the proposed design that are departures from standard practice and establish if those departures are justified. A prominent example of this is the seismic design of this structure. Most other movable bridges were either designed before modern seismic design codes were established or they are in areas of low seismicity.

Bascule Bridge Layout Study - Comparison of existing bridge designs

Y.Yang 2/22/2007

			Exist SPB	Study SPB Rolling Lift	Proposed SPB Trunnion	1st Ave South	Green Bay Rolling Lift	Hylebos	Boynton	Curtis Creek	Illinois St.
Location			Seattle	Seattle	Seattle	Seattle	Wisconsin	Tacoma	Florida	Baltimore	San Fran
Year of Construction			1930	?	?	1995	1996+/-	1931	1997+/-	1973	2005?
Type			Scherzer	Scherzer	Trunnion	Trunnion	Scherzer	Trunnion	Trunnion	Trunnion	Single leaf
Superstructure			Truss	Truss	Truss	Truss	Girder	Truss	Girder	Girder	Girder
Seismic Design Return Period		Yrs.	?	975	975	475	?	?	Zone A	?	Yes
Deck Width	W1	ft	50.00	64.33	64.33	53.00	73.50	37.50	54.13	36.00	46.00
Deck Overhang Width	W2	ft	6.00	9.17	4.50	0.00	6.89	5.00	6.56	1.08	6.00
Bascule Cantilever Deck Area (W1x L2)	A1	ft^2	4750.00	7376.88	6690.66	6651.50	6269.55	4031.25	4077.70	3852.00	3726.00
Trunnion (Bearing) to Midspan	L1	ft	95.00	114.67	121.00	147.00	85.30	119.00	85.83	125.50	81.00
Bascule Leaf Cantilever	L2	ft	95.00	114.67	104.00	125.50	85.30	107.50	75.33	107.00	81.00
Trunnion (Bearing) to LL Shoe	L3	ft	0.00	0.00	17.00	21.50	0.00	11.50	10.50	18.50	0.00
Trunnion (Bearing) to bk of C-weight	L4	ft	24.50	29.50	30.00	36.00	27.15	34.00	25.26	30.42	0.00
Truss(Girder) Depth at LL Shoe (Bearing)	H1	ft	18.75	25.00	27.39	25.33	14.92	25.50	12.80	15.00	7.00
Truss(Girder) Depth at Midspan	H2	ft	6.42	6.00	6.00	10.00	6.15	12.00	6.14	5.84	7.00
W2/W1			12.00%	14.25%	6.99%	0.00%	9.37%	13.33%	12.12%	3.01%	13.04%
L3/L1			0.00%	0.00%	14.05%	14.63%	0.00%	9.66%	12.23%	14.74%	0.00%
L4/L1			25.79%	25.73%	24.79%	24.49%	31.83%	28.57%	29.43%	24.24%	0.00%
L4/L2			25.79%	25.73%	28.85%	28.69%	31.83%	31.63%	33.54%	28.43%	0.00%
H1/L2			19.74%	21.80%	26.34%	20.19%	17.49%	23.72%	16.99%	14.02%	8.64%
Bascule Footing Length	L5	ft	46.00	60.00	57.00	68.00	44.29	57.75	38.42	55.00	18.00
Bascule Footing Width	W3	ft	65.67	90.00	90.00	100.00	98.00	46.00	89.27	55.00	58.00
Footing Type			315 Timber	?	120-Steel 2'	77-Steel 2'	8-Shaft 8'	252 Timber	?	?	12-steel 3'
Trunnion to Front of Footing	L6	ft	11.33	13.67	20.00	22.75	9.19	18.00	14.76	20.50	9.00
Bascule Footing Area (L5 x W3)	A2	ft^2	3020.66	5400.00	5130.00	6800.00	4340.42	2656.50	3429.61	3025.00	1044.00
W3/W1			131.33%	139.90%	139.90%	188.68%	133.33%	122.67%	164.91%	152.78%	126.09%
A2/A1			63.59%	73.20%	76.67%	102.23%	69.23%	65.90%	84.11%	78.53%	28.02%
L6/L1			11.93%	11.92%	16.53%	15.48%	10.77%	15.13%	17.20%	16.33%	11.11%
L6/L5			24.64%	22.78%	35.09%	33.46%	20.74%	31.17%	38.42%	37.27%	50.00%

Drainage Data

Appendix G

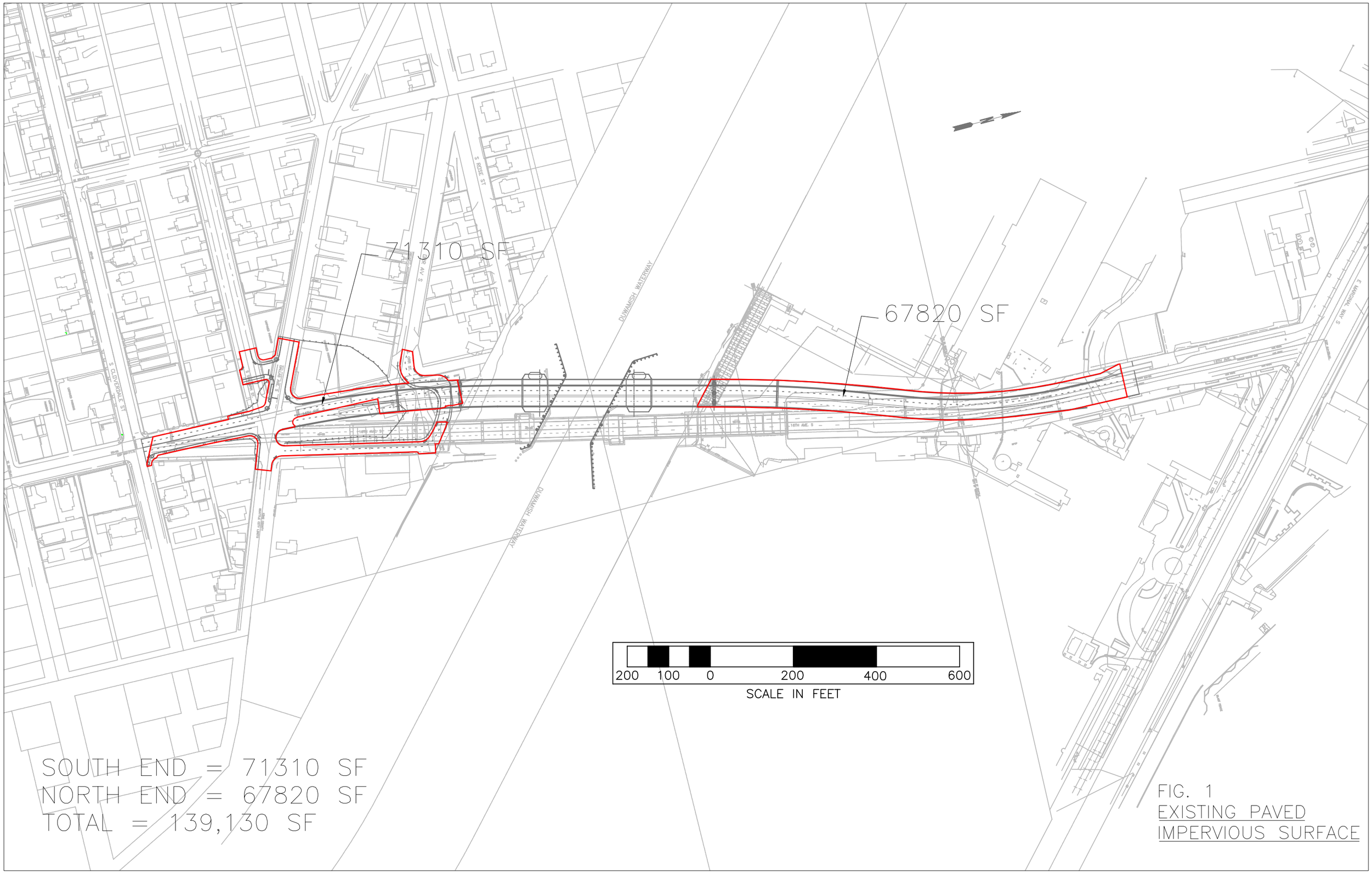

SOUTH END = 71310 SF
NORTH END = 67820 SF
TOTAL = 139,130 SF

FIG. 1
EXISTING PAVED
IMPERVIOUS SURFACE

J:\25317S7 S Park Movable Br\CADD\CIVI\DES\Impervious Surface.dwg, 8/13/2007 5:03:44 PM

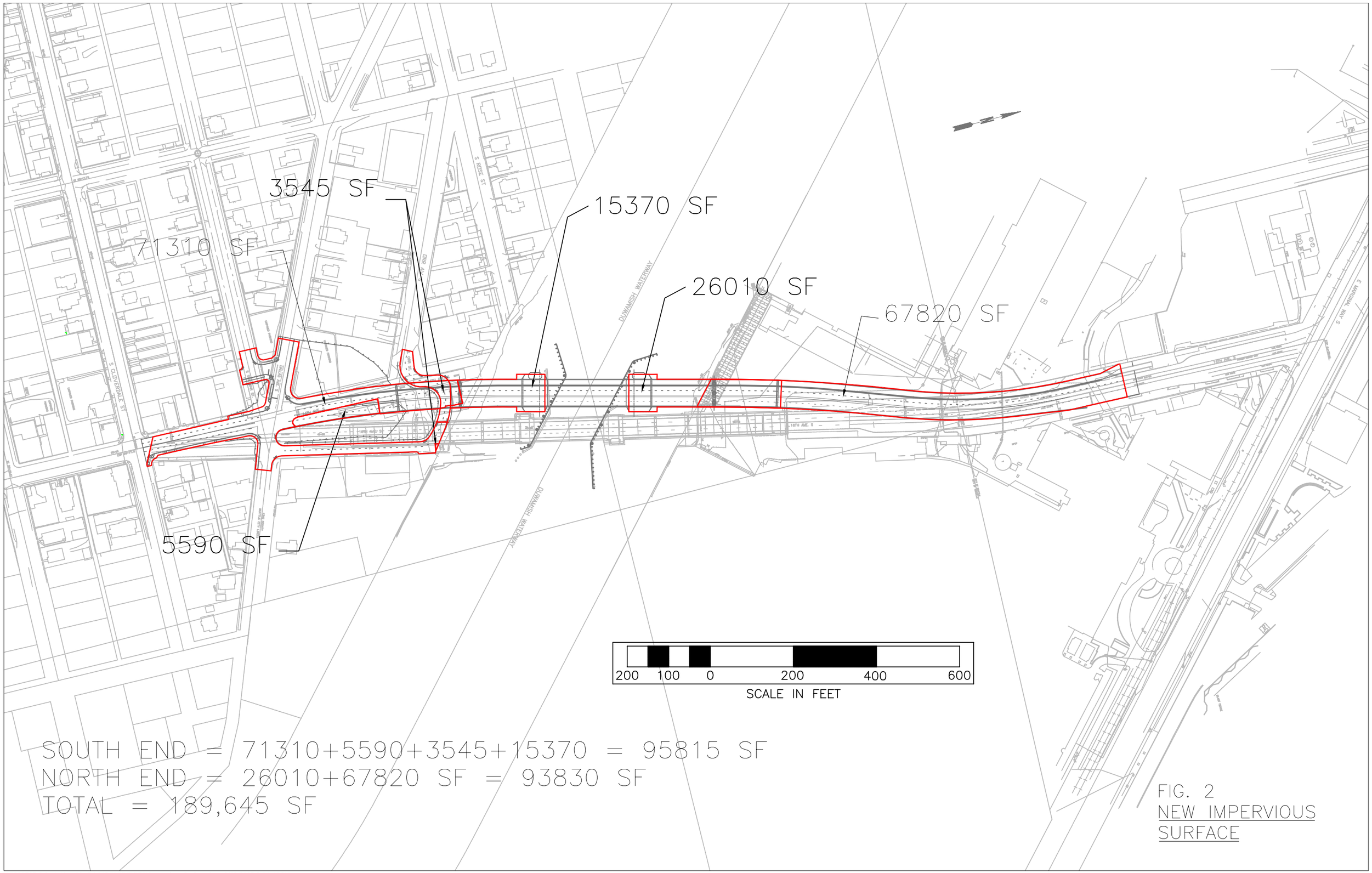

SOUTH END = 71310+5590+3545+15370 = 95815 SF
NORTH END = 26010+67820 SF = 93830 SF
TOTAL = 189,645 SF

FIG. 2
NEW IMPERVIOUS SURFACE

J:\25317S7 S Park Movable Br\CADD\CIVI\DES\Impervious Surface.dwg, 8/13/2007 5:04:44 PM

Civil Engineering Design

Appendix H

Design Standards:

City of Seattle Right-Of-Way Improvements Manual (CoS ROW Manual) and AASHTO Green Book, latest version

Design Info:

35 mph (South Park Bridge Project Draft EIS, Sep 2005)
Principal Arterial (Street Classification Map), Bicycle Street

InRoads Project

South Park.rwk

South Park Bridge Horizontal Alignment (SPB)

Skewed tangent on bascule span, provides 30' lateral clearance for Boeing buildings (approx sta 33+50)
11' through lanes, 12' curb lane (both in CoS ROW Manual Section 4.6.2), ped/bike path 13' (WSDOT DM Sec 1020.06 (1))
Realigned horizontal alignment to remove reverse curve from Civil Design-7.

*Using **City of Seattle** Standards, 35mph design speed*

Minimum curve radius	R = 420 feet	(CoS ROW Manual, Section 4.4.2)
Maximum superelevation	4%	(CoS ROW Manual, Section 4.4.2)
Normal Cross slope	2%	(CoS ROW Manual, Section 4.5.2)

*Using **AASHTO**, 35mph design speed*

Curve at PC 16+22.55 => R = 2490', 2% super	(AASHTO Exhibit 3-25, 2004)
Curve at PC 27+69.56 => R = 2490', 2% super	(AASHTO Exhibit 3-25, 2004)
Curve at PC 31+92.74 => R = 1250', 2.8% super	(AASHTO Exhibit 3-25, 2004)

AASHTO Superelevation runoff Lr, depending on widths of lanes (sections below):

	SPB 16+22.55 P.C.	SPB 21+85.36 P.T.	SPB 27+69.56 P.C.	SPB 30+04.63 SPB 31+92.74 P.T. & P.C.	SPB 35+89.32 P.T.
w =	11	11	11	11	11
n1=	1.5	1.5	1.5	3	2.5
bw=	0.83	0.83	0.83	0.67	0.7
ed=	super	super	super	super	super
rel gradient:	0.62	0.62	0.62	0.62	0.62

(AASHTO Equation 3-25, 2004)
Lr = w(n1)(ed)(bw)/max relative gradient

NOTE: Only west side of SPB is rotating and therefore is 1.5 lane width

AASHTO Tangent Runout, Lt

eNC = 2 %
ed = super

$Lt = e_{NC}/e_d * Lr$ (AASHTO Equation 3-26, 2004)

16+22.55: Normal crown to 2% super		2 % super	Curve	Tangent	
Lr	44 ft	0.85 on tanget [1]	**6**	**38**	(AASHTO Exhib. 3-33, 2004)
Lt	**44** ft				and text: 70 to 90% range best
21+85.36: 2% super to Normal crown		2 % super	Curve	Tangent	
Lr	44 ft	0.85 on tanget [2]	**6**	**38**	(AASHTO Exhib. 3-33, 2004)
Lt	**44** ft				
27+69.56: Normal crown (2%) to 2% supe		2 % super	Curve	Tangent	
Lr	44 ft	0.9 on tanget:	**4**	**40**	(AASHTO Exhib. 3-33, 2004)
Lt	**44** ft				and text: 70 to 90% range best

[1] Minimize impact to business on south end
[2] Be at 2% crown before bascule joint (SPB STA. 22+76.50)

30+04.63: 2% super to Normal crown		2	% super	Curve	Tangent	
Lr	71 ft	0.9	on tanget:	**7**	**64**	(AASHTO Exhib. 3-33, 2004)
Lt	**71** ft					
31+92.74: Normal crown to 2.8% super		2.8	% super	Curve	Tangent	
Lr	100 ft	0.9	on tanget:	**10**	**90**	(AASHTO Exhib. 3-33, 2004)
Lt	**71** ft					
35+89.32: 2.8% super to Normal crown		2.8	% super	Curve	Tangent	
Lr	87 ft	0.9	on tanget:	**9**	**78**	(AASHTO Exhib. 3-33, 2004)
Lt	**62** ft					

	Begin Tangent Runout	Begin Super Runoff	PC	Begin Full Super	End Full Super	PT	End Super Runoff	End Tangent Runout
2.0%	(1) 15+40.55	15+84.55	**16+22.55**	16+28.55	21+79.36	**21+85.36**	22+23.36	(2) 22+67.36
2.0%	26+85.56	27+29.56	**27+69.56**	27+73.56	29+97.63	**30+04.63**	(3) 30+68.63	**Stop at 0%**
2.8%	**Begin at 0%**	(3) 31+02.74	**31+92.74**	32+02.74	35+80.32	**35+89.32**	36+67.32	37+29.32

(1) Minimize impact to business on south end (2) Be at 2% crown before bascule joint (SPB STA. 22+76.50)
(3) Sufficient transition from 2% super LT to 2.8% super RT- will connect from end full super to begin full super

Taper Rates

Taper rate AASHTO p.252. Transition taper for lane-drop = L = WS = width * speed.
To reduce from 11 ft lanes to 10 ft lanes: Minimum = 1ft * 35mph = 35 ft
More conservative than CoS ROW Manual, Section 4.6.2, WS^2/60

South Park Bridge Vertical Alignment

*Using **City of Seattle** Standards, 35mph design speed*

Shall be based on appropriate design standards (CoS ROW Manual, AASHTO or WSDOT DM)
Max grade 9% (CoS ROW Manual, Section 4.4.2)

*Using **AASHTO** Standards, 35mph design speed:*

TYPE	VC Length	G1	G2	Notes (See calcs below)
1st Sag	**150 feet**	0.07%	5%	Using comfort criteria length
Crest	**620 feet**	5%	-5%	Sufficient for 0.5' object height
2nd Sag	**260 feet**	-5%	-1.45%	
3rd Sag	**100 feet**	-1.45%	0.03%	

Standard Sag Vertical Curves

			5% downgrade SSD= 267				(AASHTO Exhibit 3-2, 2004)
			Less than 3% SSD= 250				(AASHTO Exhibit 3-75, 2004)
Grade 1	**Grade 2**	**A**	**Provided**	**SSD Length Required**	**Comfort Criteria**		
0.07	5	4.93	L=150'	263.31 ft	129.88	for SSD>L	(AASHTO p. 273, 2004)
-5	-1.45	3.55	L=260'	189.64 ft	93.52	for SSD>L	(AASHTO p. 273, 2004)
-1.45	-0.03	1.42	L=100'	-397.89 ft	37.41	for SSD>L	(AASHTO p. 273, 2004)

Standard Crest Vertical Curves

			Eye height = 3.5 ft, Object height = 2 ft			
			5% downgrade SSD= 267			(AASHTO Exhibit 3-2, 2004)
Grade 1	**Grade 2**	**A**	**Provided**	**Length Required**		
5	-5	10	L=620'	330.35 ft req	for SSD<L	(AASHTO p. 268, 2004)
5	-5	10	L=620'	536.35 ft req [4]	for SSD<L	(AASHTO p. 267, 2004)

[4] Object height = 0.5'

Dallas Ave

Horizontal Alignment of D1 (east) is different than D2 (west). The horizontal alignments are in the center of the road.

Vertical alignments continue from the superelevation of the SPB line. D1 and D2 are at an angle, so the SPB alignment has a slope of -3.07% to the east (D1)and 3.51% slope to the west (D2). AASHTO Local Roads and Streets chapter, grades are limited to 5% p.391. CoS R/W Manual allows 10% on Minor Arterials

Per Einer 12/8/06, the sidewalk on the bridge shall be at the same elevation as the pavement. The sidewalk is separated from vehicle lanes by a concrete barrier. On the D2 line side, in the vicinity of SPB 17+00, there will be curb and gutter with a raised sidewalk (6"). The transition to a raised sidewalk will be sloped 12:1. With the 5% roadway slope, the length needed is 4 feet.

Because this intersection is stop controlled, the length of curves near the intersection do not use SSD or comfort criteria vertical lengths. The sag curves matching the existing Dallas roadway to the west (D2) and east (D1) were designed to minimize impacts to Dallas Ave and the neighboring areas. The current design accommodates 20 mph on the 40' sag curve on D1, and 15 mph on the 50' sag curve on D2 by using comfort criteria and illumination. To accommodate higher speeds, the vertical curve lengths will need to be lengthened and will therefore increase the amount of impact to Dallas Ave.

Sullivan St

The reconfiguration of the Sullivan St connection is conceptual.