PRO DRAFT INC. PD# 676 Ph:(604)589-6425
DRAWINGS PREPARED ON 3D-Xsteel File Name :- G (1)
Model Name: 725_102_TOLT_BRIDGE_541
Plot Date: 09/10/2006 12:02:18

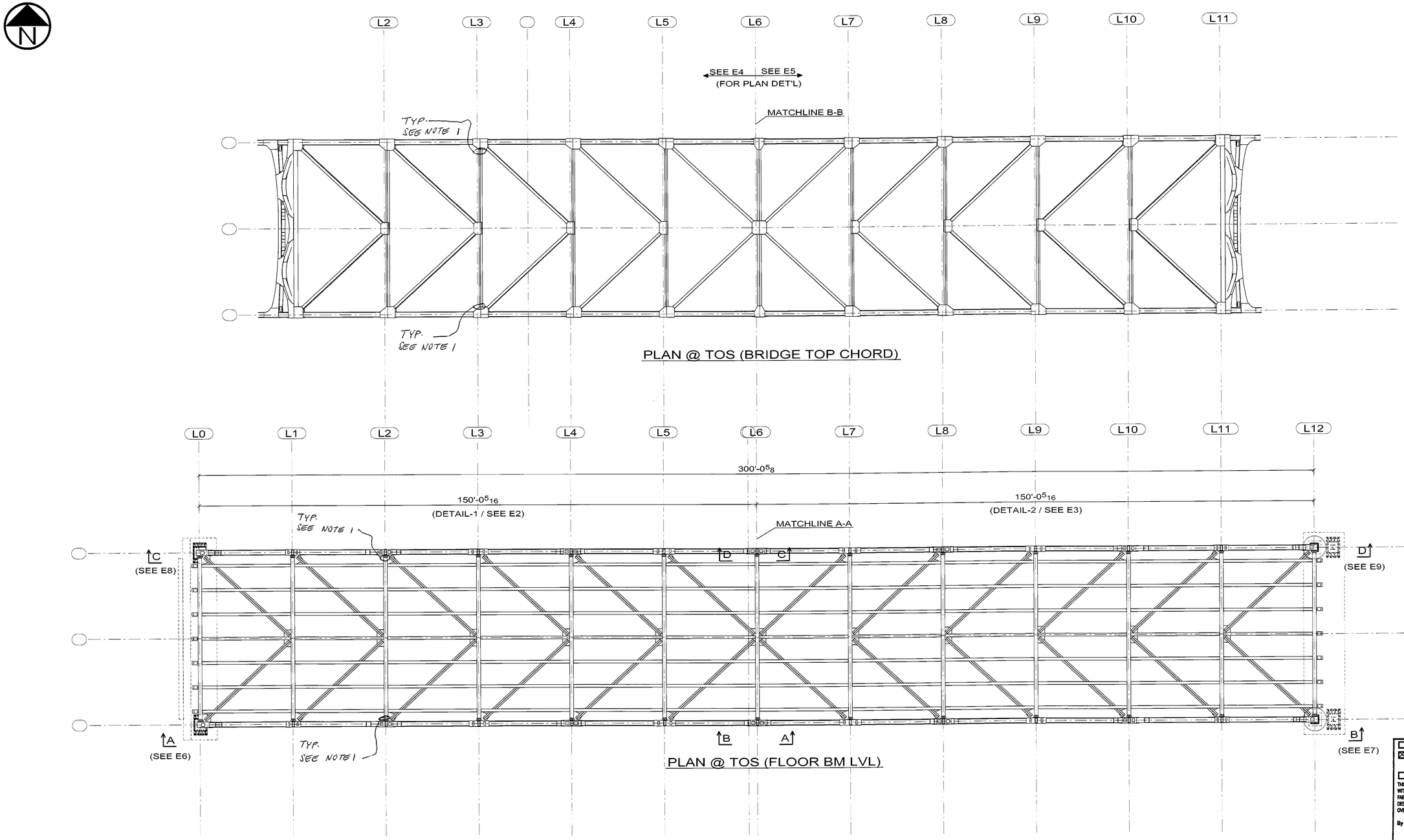


☐ CONFORMS TO DESIGN CONCEPT
☒ CONFORMS TO DESIGN CONCEPT WITH REVISIONS AS SHOWN
☐ NON-CONFORMING–REVISE & RESUBMIT

THIS SHOP DRAWING HAS BEEN REVIEWED FOR GENERAL CONFORMANCE WITH DESIGN CONCEPT ONLY AND DOES NOT RELIEVE THE FABRICATOR/VENDOR OF RESPONSIBILITY FOR CONFORMANCE WITH DESIGN DRAWINGS AND SPECIFICATIONS ALL OF WHICH HAVE PRIORITY OVER THIS SHOP DRAWING.

By A.F. Date 10/13/06

I.IN & ASSOCIATES, INC.

NOTE 1:
MAY NEED TO SHORTEN ON EACH END TO ALLOW FOR ERECTION
COORDINATE ALL CONNECTION ELEMENTS WHERE THIS CHANGES APPLY
IF SHORTENED, RE-SUBMIT FOR APPROVAL

NOTE 2:
ENSURE CAMBER DIAGRAM SHOWN ON SHEET S33
WAS TAKEN INTO ACCOUNT

CONTRACTOR NOTE:
THIS DRAWING IS BEING SUBMITTED FOR APPROVAL AS REQUIRED. VERIFY OR SUPPLY ALL QUANTITIES, ALL DIMENSIONS, ALL INFORMATION, & ALL CONFIGURATIONS

PRINT RECORD

| NO. | USE | DATE |
|---|---|---|
| | APPR. | |
| | APPR. | |
| | PURCH | |
| | FAB | |
| | FAB. OFFICE | |
| | Q.A. | |
| | DIST. | |
| | ERECT. | |

OPEN HOLES
WELD
STEEL
BOLTS
SURFACE PREP-SP
PAINT
REF.DRAWING S32

| REV | DATE | DESCRIPTION | |
|---|---|---|---|
| 0 | SEP/10/06 | FOR APPROVAL | VS |

RAINIER WELDING
19020 NE 84TH STREET - REDMOND, WA 98053
(425) 868-1300 FAX (425) 868-8872
STEEL AND ALUMINUM FABRICATING

PROJECT: TOLT BRIDGE No 1834A
THIS DRAWING INCLUDES: GENERAL PLAN LAYOUT
FOR: SNOHOMISH COUNTY OFFICIAL
DRAWN DATE 06/19/2006
CHK DATE 09/10/2006
DWG NUMBER 2707 - E1

| No to SHIP | SHIP MARK | No. PIECES | PIECE MARK | DESCRIPTION | LENGTH | UNIT WT. | GRADE | REMARKS |
|---|---|---|---|---|---|---|---|---|
| | | | | | | | | |
| 1 | 101B | | | STRINGER | | 1787 | | |
| | | 1 | 101B | W24X68 | 24'-10" | 1699 | AASHTO M 270 GR. 50 | |
| | | 4 | p132 | L8X8X1/2 | 0'-10" | 22 | AASHTO M 270 GR. 50 | |
| | | 12 | b1 | $^{7}/_{8}$Ø A325 BOLT | $2^{3}/_{4}$ | | | |

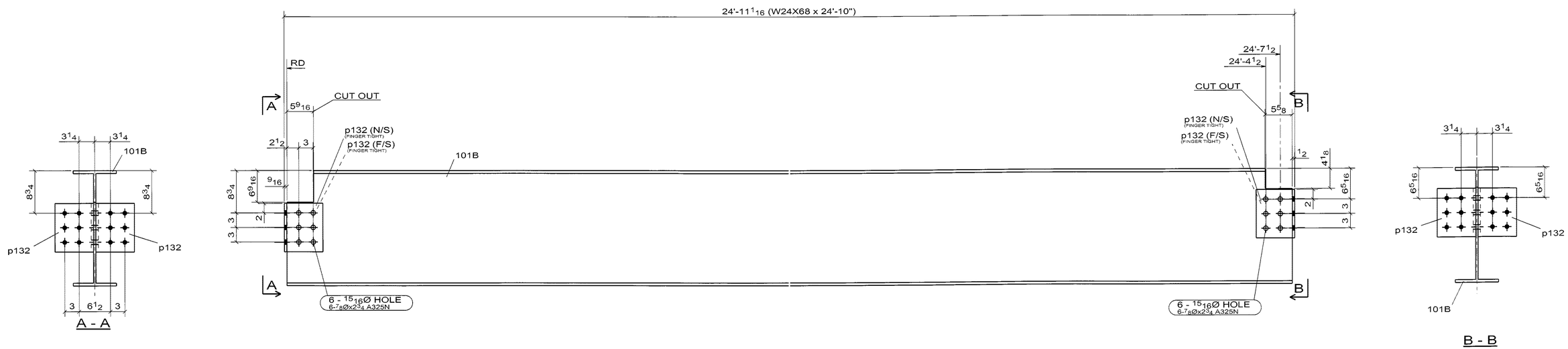


NOTE:

- SEE 2SK FOR WELDED STUD LAYOUT

1 - STRINGER -101B

(SPAN 2)

WELD NOTE FOR ANY ASSEMBLY REQUIRING TACK WELDS:

- ALL TACK WELDS ARE TO BE MADE IN THE WELD JOINT ONLY

☒ CONFORMS TO DESIGN CONCEPT
☐ CONFORMS TO DESIGN CONCEPT WITH REVISIONS AS SHOWN
☐ NON-CONFORMING–REVISE & RESUBMIT

THIS SHOP DRAWING HAS BEEN REVIEWED FOR GENERAL CONFORMANCE WITH DESIGN CONCEPT ONLY AND DOES NOT RELIEVE THE FABRICATOR/VENDOR OF RESPONSIBILITY FOR CONFORMANCE WITH DESIGN DRAWINGS AND SPECIFICATIONS ALL OF WHICH HAVE PRIORITY OVER THIS SHOP DRAWING.

By A. F. Date 10/13/06

I.IN & ASSOCIATES, INC.

CONTRACTOR NOTE:
THIS DRAWING IS BEING SUBMITTED FOR APPROVAL AS REQUIRED. VERIFY OR SUPPLY ALL QUANTITIES, ALL DIMENSIONS, ALL INFORMATION, & ALL CONFIGURATIONS.

PRINT RECORD

| NO. | USE | DATE |
|---|---|---|
| | APPR. | |
| | APPR. | |
| | PURCH | |
| | FAB | |
| | FAB. OFFICE | |
| | Q.A. | |
| | DIST. | |
| | ERECT. | |

OPEN HOLES 15/16 Ø U/N
WELD BRIDGE WELDING CODE: D1.5
STEEL AS NOTED
BOLTS
SURFACE PREP-SP
PAINT SEE SPECS
REF DRAWING E3

| REV | DATE | DESCRIPTION | VS. |
|---|---|---|---|
| 0 | SEP/10/06 | FOR APPROVAL | |

RAINIER WELDING
19020 NE 84TH STREET - REDMOND, WA 98053
(425) 868-1300 FAX (425) 868-8872
STEEL AND ALUMINUM FABRICATING

PROJECT TOLT BRIDGE No 1834A
THIS DRAWING INCLUDES
FOR SNOHOMISH COUNTY OFFICIAL
DRAWN DJ DATE 08/03/2006 CHK DSC DATE 09/10/2006
DWG NUMBER 2707 - 101B

PRO DRAFT INC. PO# 676 PH:(604)589-6425
DRAWINGS PREPARED ON 3D-Xsteel File Name :- A [101.B]
Model Name: 725_102_TOLT_BRIDGE_541
Plot Date: 09/10/2006 12:16:31

| No to SHIP | SHIP MARK | No PIECES | PIECE MARK | DESCRIPTION | LENGTH | UNIT WT. | GRADE | REMARKS |
|---|---|---|---|---|---|---|---|---|
| | | | | | | | | |
| 1 | 2SK | | | SK1 | | 1753 | | |
| | | 1 | 2SK | W24X68 | 24'-9 15/16" | 1698 | AASHTO M 270 GR. 50 | |
| | | 68 | s4 | STUD-7/8-DIA | 0'-4" | 1 | A108 | |

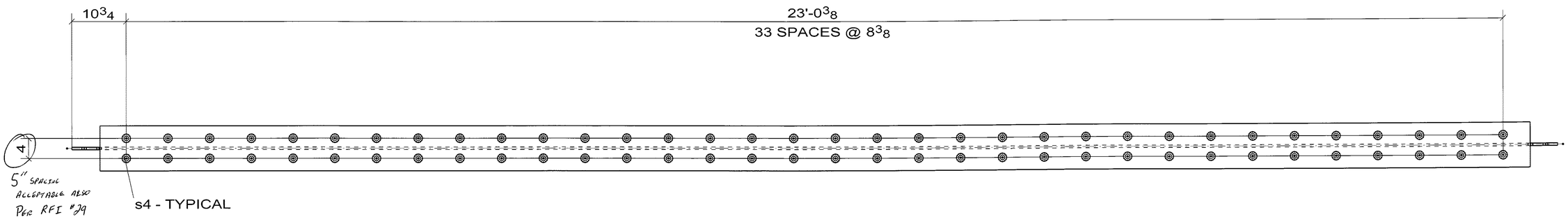


A - A

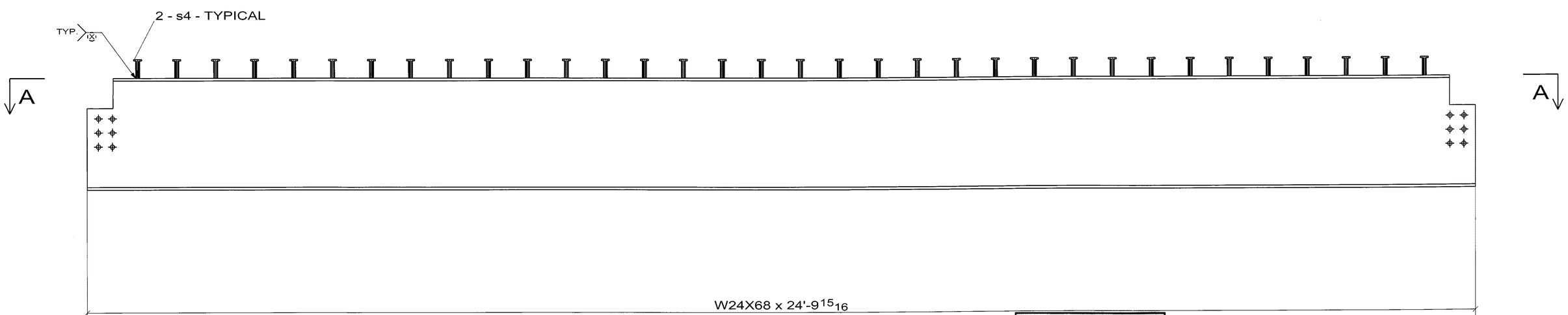


1 - SK1 -2SK

☐ CONFORMS TO DESIGN CONCEPT
☒ CONFORMS TO DESIGN CONCEPT WITH REVISIONS AS SHOWN
☐ NON-CONFORMING–REVISE & RESUBMIT
THIS SHOP DRAWING HAS BEEN REVIEWED FOR GENERAL CONFORMANCE WITH DESIGN CONCEPT ONLY AND DOES NOT RELIEVE THE FABRICATOR/VENDOR OF RESPONSIBILITY FOR CONFORMANCE WITH DESIGN DRAWINGS AND SPECIFICATIONS ALL OF WHICH HAVE PRIORITY OVER THIS SHOP DRAWING.
By J. F Date 10/13/06
I.IN & ASSOCIATES, INC.

WELD NOTE FOR ANY ASSEMBLY REQUIRING TACK WELDS:
- ALL TACK WELDS ARE TO BE MADE IN THE WELD JOINT ONLY

CONTRACTOR NOTE:
THIS DRAWING IS BEING SUBMITTED FOR APPROVAL AS REQUIRED. VERIFY OR SUPPLY ALL QUANTITIES, ALL DIMENSIONS, ALL INFORMATION, & ALL CONFIGURATIONS.

PRINT RECORD

| NO. | USE | DATE |
|---|---|---|
| | APPR. | |
| | APPR. | |
| | PURCH | |
| | FAB | |
| | FAB. OFFICE | |
| | Q.A. | |
| | DIST. | |
| | ERECT. | |

OPEN HOLES 15/16 Ø U/N
WELD BRIDGE WELDING CODE: D1.5
STEEL AS NOTED
BOLTS
SURFACE PREP-SP
PAINT
REF DRAWING

| REV | DATE | DESCRIPTION | VS |
|---|---|---|---|
| 0 | SEP/10/06 | FOR APPROVAL | |

RAINIER WELDING
19020 NE 84TH STREET - REDMOND, WA 98053
(425) 868-1300 FAX (425) 868-8872
STEEL AND ALUMINUM FABRICATING

PROJECT: TOLT BRIDGE No 1834A
THIS DRAWING INCLUDES: STRINGER STUD LAYOUT
FOR: SNOHOMISH COUNTY OFFICIAL
DRAWN: DJ DATE: 08/03/2006 CHK: DSC DATE: 09/10/2006 DWG NUMBER: 2707 - 2SK 0

PRO DRAFT INC. PO# 676 PH:(604)589-6435
DRAWINGS PREPARED ON 3D-Xpert File Name :- A [2-SK]
Model Name: 725_102_TOLT_BRIDGE_541
Plot Date: 09/10/2006 12:16:29

| No to SHIP | SHIP MARK | No. PIECES | PIECE MARK | DESCRIPTION | LENGTH | UNIT WT. | GRADE | REMARKS |
|---|---|---|---|---|---|---|---|---|
| 1 | 1SK | | | SK2 | | 9651 | | |
| | | 1 | 1SK | W36X210 | 44'-5 13/16" | 9356 | AASHTO M 270 GR. 50 | |
| | | 60 | s1 | STUD-7/8-DIA | 0'-8" | 2 | A108 | |
| | | 90 | s2 | STUD-7/8-DIA | 0'-7" | 1 | A108 | |
| | | 54 | s3 | STUD-7/8-DIA | 0'-9" | 2 | A108 | |

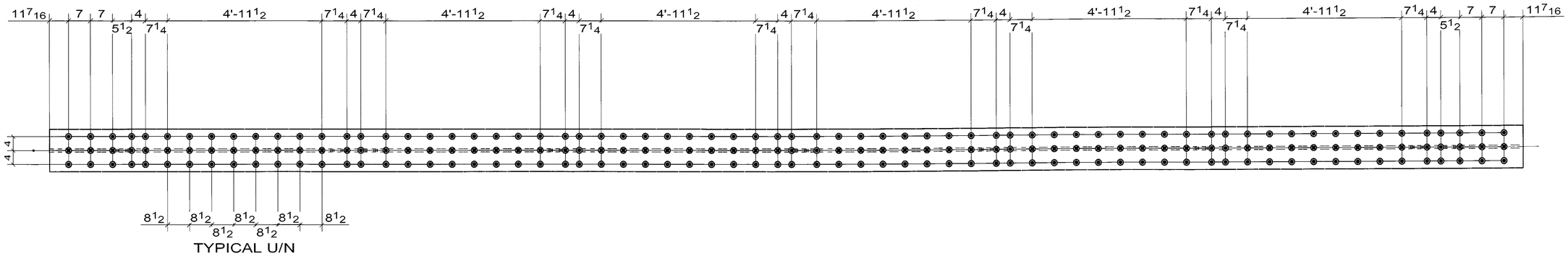


A - A

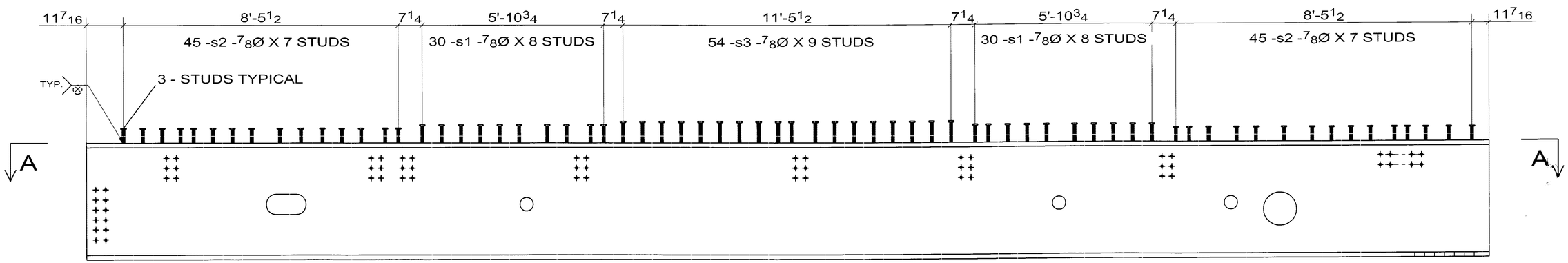


☒ CONFORMS TO DESIGN CONCEPT
☐ CONFORMS TO DESIGN CONCEPT WITH REVISIONS AS SHOWN
☐ NON-CONFORMING–REVISE & RESUBMIT

THIS SHOP DRAWING HAS BEEN REVIEWED FOR GENERAL CONFORMANCE WITH DESIGN CONCEPT ONLY AND DOES NOT RELIEVE THE FABRICATOR/VENDOR OF RESPONSIBILITY FOR CONFORMANCE WITH DESIGN DRAWINGS AND SPECIFICATIONS ALL OF WHICH HAVE PRIORITY OVER THIS SHOP DRAWING.

By A.F. Date 10/13/06

LIN & ASSOCIATES, INC.

1 - SK2 -1SK

WELD NOTE FOR ANY ASSEMBLY REQUIRING TACK WELDS:
- ALL TACK WELDS ARE TO BE MADE IN THE WELD JOINT ONLY

CONTRACTOR NOTE:
THIS DRAWING IS BEING SUBMITTED FOR APPROVAL AS REQUIRED. VERIFY OR SUPPLY ALL QUANTITIES, ALL DIMENSIONS, ALL INFORMATION, & ALL CONFIGURATIONS.

| PRINT RECORD | | | |
|---|---|---|---|
| NO. | USE | DATE | OPEN HOLES 15/16 Ø U/N |
| | APPR. | | WELD BRIDGE WELDING CODE: D1.5 |
| | APPR. | | STEEL AS NOTED |
| | PURCH | | BOLTS |
| | FAB | | SURFACE PREP-SP |
| | FAB. OFFICE | | PAINT SEE SPECS |
| | Q.A. | | REF.DRAWING |
| | DIST. | | |
| | ERECT. | | |

| REV | DATE | DESCRIPTION | VS |
|---|---|---|---|
| 0 | SEP/10/06 | FOR APPROVAL | |

# RAINIER WELDING

19020 NE 84TH STREET - REDMOND, WA 98053
(425) 868-1300 FAX (425) 868-8872
STEEL AND ALUMINUM FABRICATING

PROJECT: TOLT BRIDGE No 1834A
THIS DRAWING INCLUDES: FLOOR BEAM STUD LAYOUT
FOR: SNOHOMISH COUNTY OFFICIAL

| DRAWN | CHK | DWG NUMBER |
|---|---|---|
| DJ | DSC | 2707 - 1SK |
| DATE 08/03/2006 | DATE 09/10/2006 | |

PRO DRAFT INC. PO# 676 Ph:(604)859-5425
DRAWINGS PREPARED ON 3D-Xsteel File Name :- A [1.SK]
Model Name: 725_102_TOLT_BRIDGE_541
Plot Date: 09/10/2006 12:16:25

PRO DRAFT INC. PO# 676 PH:(604)589-9425
DRAWINGS PREPARED ON: 3D-Xsteel File Name :- G [10]
Model Name: T25_102_TOLT_BRIDGE_541
Plot Date: 09/10/2006 12:05:01

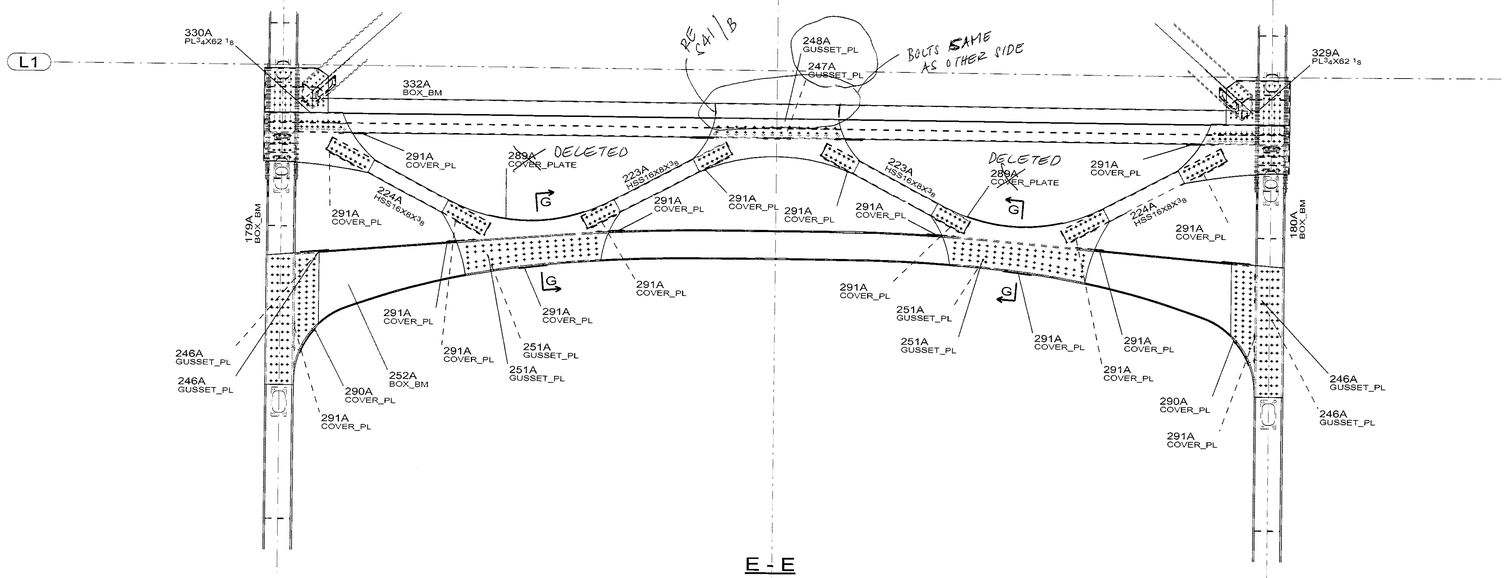


E - E

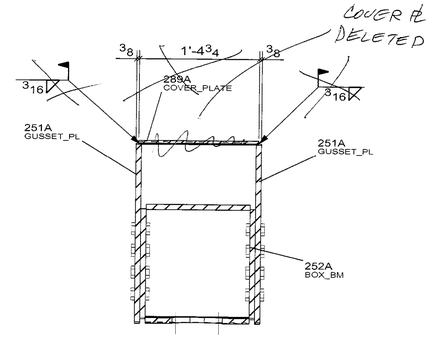


G - G

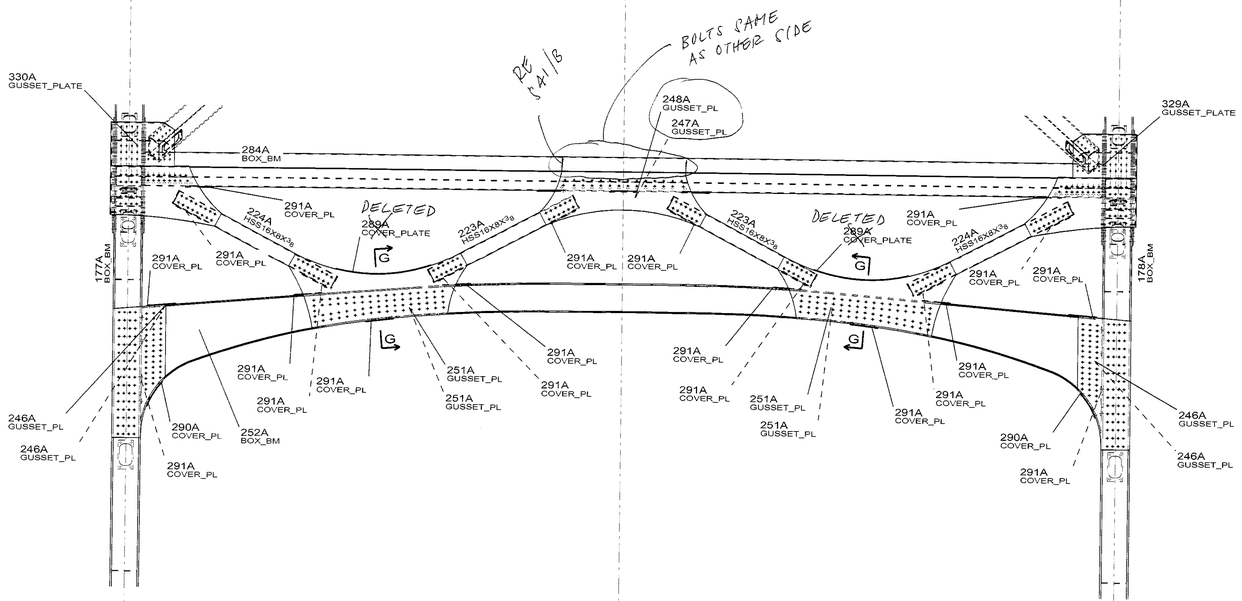


F - F

CONTRACTOR NOTE:
THIS DRAWING IS BEING SUBMITTED FOR APPROVAL AS REQUIRED. VERIFY OR SUPPLY ALL QUANTITIES, ALL DIMENSIONS, ALL INFORMATION, & ALL CONFIGURATIONS.

PRINT RECORD

| NO. | USE | DATE |
|---|---|---|
| | APPR. | |
| | APPR. | |
| | PURCH | |
| | FAB | |
| | FAB. OFFICE | |
| | Q.A. | |
| | DIST. | |
| | ERECT. | |

OPEN HOLES
WELD
STEEL
BOLTS
SURFACE PREP-SP
PAINT
REF.DRAWING S41

☐ CONFORMS TO DESIGN CONCEPT
☐ CONFORMS TO DESIGN CONCEPT WITH REVISIONS AS SHOWN
☒ NON-CONFORMING–REVISE & RESUBMIT

THIS SHOP DRAWING HAS BEEN REVIEWED FOR GENERAL CONFORMANCE WITH DESIGN CONCEPT ONLY AND DOES NOT RELIEVE THE FABRICATOR/VENDOR OF RESPONSIBILITY FOR CONFORMANCE WITH DESIGN DRAWINGS AND SPECIFICATIONS ALL OF WHICH HAVE PRIORITY OVER THIS SHOP DRAWING.

By A.F. Date 10/13/06

I.IN & ASSOCIATES, INC.

| REV | DATE | DESCRIPTION | |
|---|---|---|---|
| 0 | SEP/10/06 | FOR APPROVAL | VS |

# RAINIER WELDING

19020 NE 84TH STREET - REDMOND, WA 98053
(425) 868-1300 FAX (425) 868-8872
STEEL AND ALUMINUM FABRICATING

PROJECT: TOLT BRIDGE No 1834A
THIS DRAWING INCLUDES: SECTION @ BRIDGE ENDS
FOR: SNOHOMISH COUNTY OFFICIAL

| DRAWN | CHK | DWG NUMBER |
|---|---|---|
| DATE 08/04/2006 | DATE 09/10/2006 | 2707 - E10 |

0

PRO DRAFT INC. PO# 676 PH:(604)589-6425
DRAWINGS PREPARED ON 3D-Xsteel File Name :- G [9]
Model Name: 725_102_TOLT_BRIDGE_541
Plot Date: 09/10/2006 12:04:54

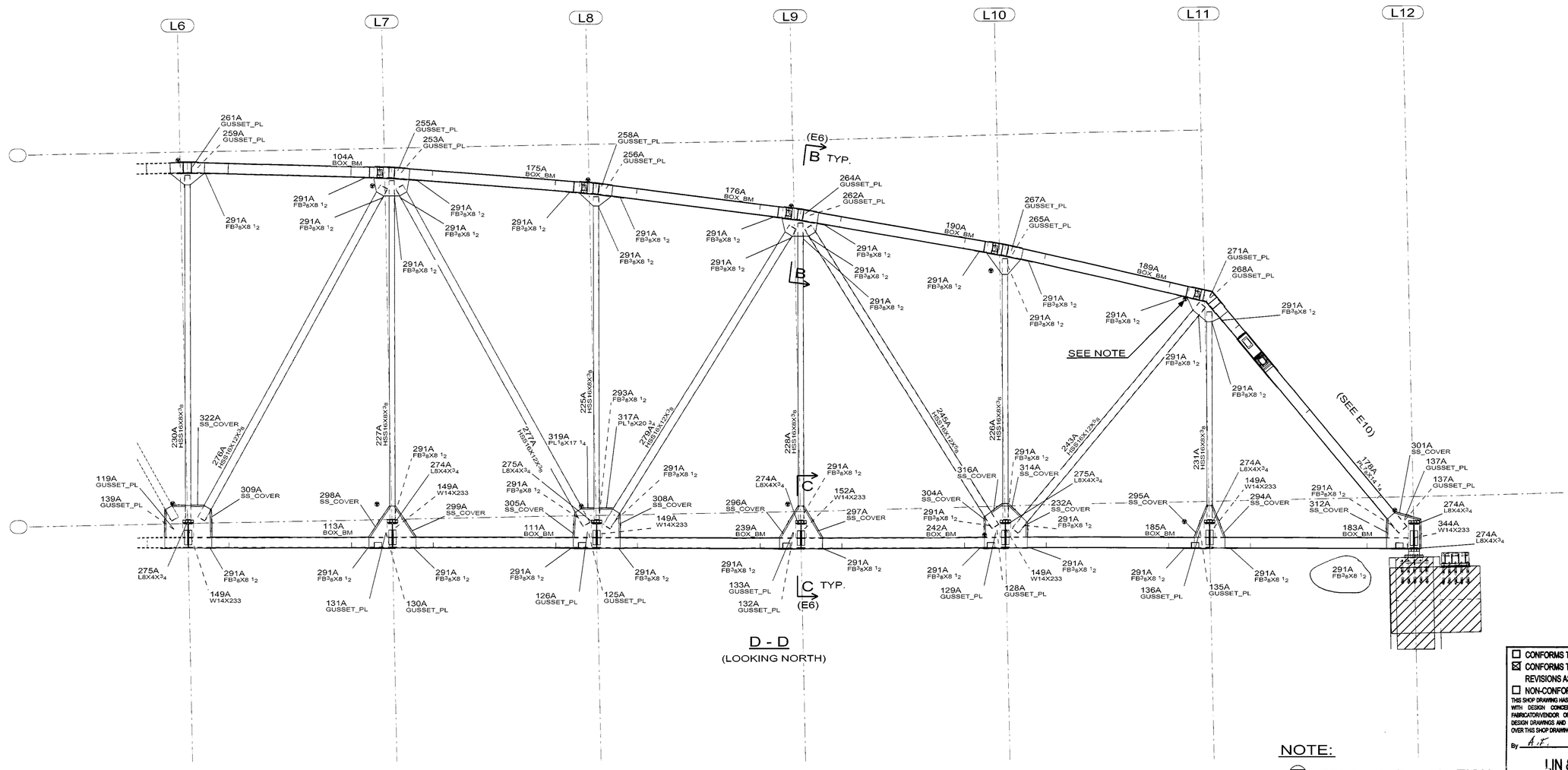


## D - D
(LOOKING NORTH)

NOTE:

▼ - DENOTES ORIENTATION MARK FOR GUSSETS

☐ CONFORMS TO DESIGN CONCEPT
☒ CONFORMS TO DESIGN CONCEPT WITH REVISIONS AS SHOWN
☐ NON-CONFORMING–REVISE & RESUBMIT

THIS SHOP DRAWING HAS BEEN REVIEWED FOR GENERAL CONFORMANCE WITH DESIGN CONCEPT ONLY AND DOES NOT RELIEVE THE FABRICATOR/VENDOR OF RESPONSIBILITY FOR CONFORMANCE WITH DESIGN DRAWINGS AND SPECIFICATIONS ALL OF WHICH HAVE PRIORITY OVER THIS SHOP DRAWING.

By A.F. Date 10/13/06

I.IN & ASSOCIATES, INC.

CONTRACTOR NOTE:
THIS DRAWING IS BEING SUBMITTED FOR APPROVAL AS REQUIRED. VERIFY OR SUPPLY ALL QUANTITIES, ALL DIMENSIONS, ALL INFORMATION, & ALL CONFIGURATIONS.

PRINT RECORD

| NO. | USE | DATE |
|---|---|---|
| | APPR. | |
| | APPR. | |
| | PURCH | |
| | FAB | |
| | FAB. OFFICE | |
| | Q.A. | |
| | DIST. | |
| | ERECT. | |

OPEN HOLES
WELD
STEEL
BOLTS
SURFACE PREP-SP
PAINT
REF.DRAWING S32

| REV | DATE | DESCRIPTION | |
|---|---|---|---|
| 0 | SEP/10/06 | FOR APPROVAL | VS |

# RAINIER WELDING

19020 NE 84TH STREET - REDMOND, WA 98053
(425) 868-1300 FAX (425) 868-8872
STEEL AND ALUMINUM FABRICATING

PROJECT: TOLT BRIDGE No 1834A
THIS DRAWING INCLUDES: NORTHSIDE EL. (LOOKING NORTH)
FOR: SNOHOMISH COUNTY OFFICIAL

DRAWN DATE 08/04/2006 | CHK DATE 09/10/2006 | DWG NUMBER 2707 - E9 | 0

PRO DRAFT INC. PD# 676 PH:(604)589-6423
DRAWINGS PREPARED ON 3D-Xsteel File Name : G [8]
Model Name: 725_102_TOLT_BRIDGE_541
Plot Date: 09/10/2006 12:04:46

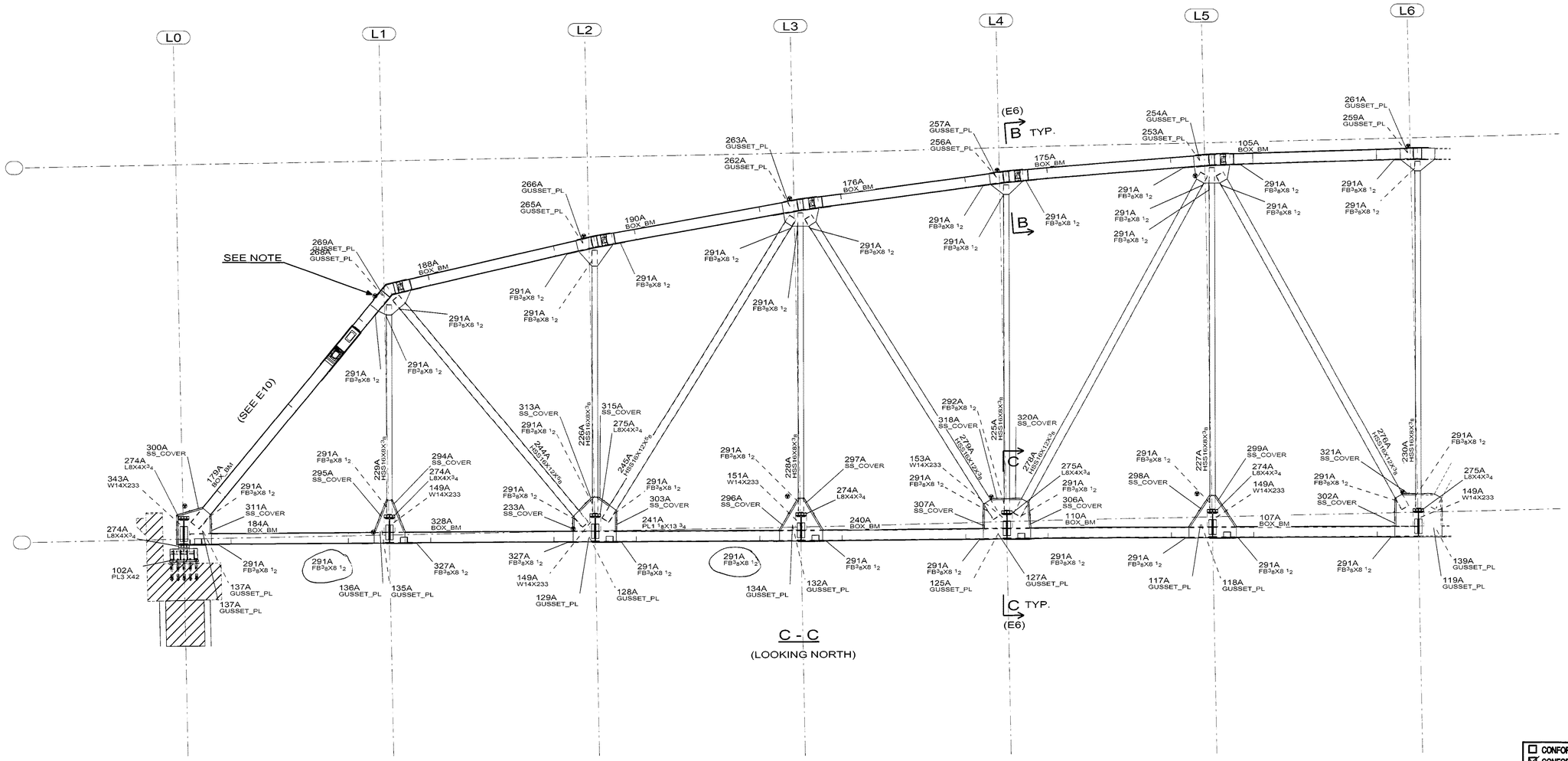


C - C
(LOOKING NORTH)

NOTE:

▼ - DENOTES ORIENTATION MARK FOR GUSSETS

☐ CONFORMS TO DESIGN CONCEPT
☒ CONFORMS TO DESIGN CONCEPT WITH REVISIONS AS SHOWN
☐ NON-CONFORMING–REVISE & RESUBMIT

THIS SHOP DRAWING HAS BEEN REVIEWED FOR GENERAL CONFORMANCE WITH DESIGN CONCEPT ONLY AND DOES NOT RELIEVE THE FABRICATOR/VENDOR OF RESPONSIBILITY FOR CONFORMANCE WITH DESIGN DRAWINGS AND SPECIFICATIONS ALL OF WHICH HAVE PRIORITY OVER THIS SHOP DRAWING.

By A.F. Date 10/13/06

I.IN & ASSOCIATES, INC.

CONTRACTOR NOTE:
THIS DRAWING IS BEING SUBMITTED FOR APPROVAL AS REQUIRED. VERIFY OR SUPPLY ALL QUANTITIES, ALL DIMENSIONS, ALL INFORMATION, & ALL CONFIGURATIONS.

PRINT RECORD

| NO. | USE | DATE |
|---|---|---|
| | APPR. | |
| | APPR. | |
| | PURCH | |
| | FAB | |
| | FAB. OFFICE | |
| | Q.A. | |
| | DIST. | |
| | ERECT. | |

OPEN HOLES
WELD
STEEL
BOLTS
SURFACE PREP-SP
PAINT
REF DRAWING S32

| REV | DATE | DESCRIPTION | |
|---|---|---|---|
| 0 | SEP/10/06 | FOR APPROVAL | VS |

# RAINIER WELDING

19020 NE 84TH STREET - REDMOND, WA 98053
(425) 868-1300 FAX (425) 868-8872
STEEL AND ALUMINUM FABRICATING

PROJECT: TOLT BRIDGE No 1834A
THIS DRAWING INCLUDES: NORTHSIDE EL. (LOOKING NORTH)
FOR: SNOHOMISH COUNTY OFFICIAL
DRAWN DATE 08/04/2006
CHK DATE 09/10/2006
DWG NUMBER 2707 - E8
A

PRO DRAFT INC. PO# 676 PH:(604)599-6425
DRAWINGS PREPARED ON 3D-Xsecd File Name :- G [7]
Model Name: 725_102_TOLT_BRIDGE_541
Plot Date: 09/10/2006 12:04:39

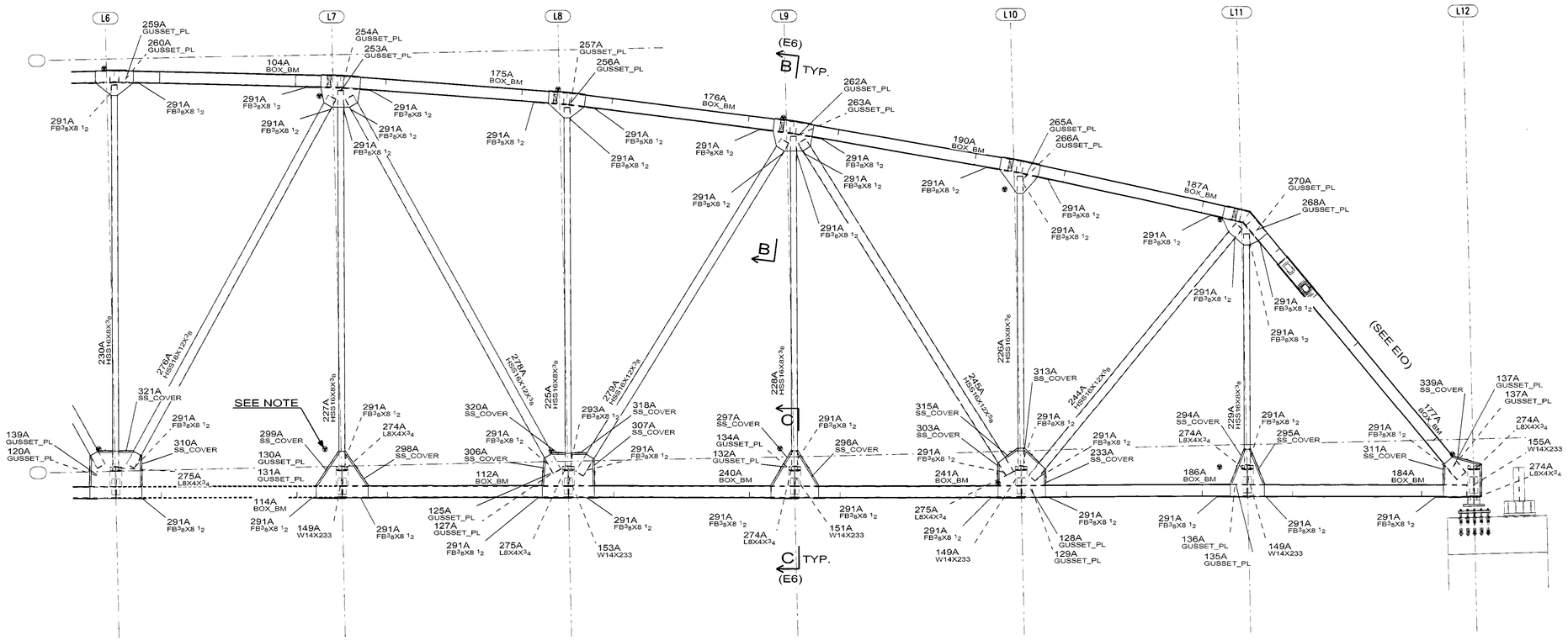


## B - B

(LOOKING NORTH)

NOTE:

▼ - DENOTES ORIENTATION MARK FOR GUSSETS

☒ CONFORMS TO DESIGN CONCEPT
☐ CONFORMS TO DESIGN CONCEPT WITH REVISIONS AS SHOWN
☐ NON-CONFORMING–REVISE & RESUBMIT

THIS SHOP DRAWING HAS BEEN REVIEWED FOR GENERAL CONFORMANCE WITH DESIGN CONCEPT ONLY AND DOES NOT RELIEVE THE FABRICATOR/VENDOR OF RESPONSIBILITY FOR CONFORMANCE WITH DESIGN DRAWINGS AND SPECIFICATIONS ALL OF WHICH HAVE PRIORITY OVER THIS SHOP DRAWING.

By A.F. Date 10/13/06

I.IN & ASSOCIATES, INC.

CONTRACTOR NOTE:
THIS DRAWING IS BEING SUBMITTED FOR APPROVAL AS REQUIRED. VERIFY OR SUPPLY ALL QUANTITIES, ALL DIMENSIONS, ALL INFORMATION, & ALL CONFIGURATIONS.

PRINT RECORD

| NO. | USE | DATE |
|---|---|---|
| | APPR. | |
| | APPR. | |
| | PURCH | |
| | FAB | |
| | FAB. OFFICE | |
| | Q.A. | |
| | DIST. | |
| | ERECT. | |

OPEN HOLES
WELD
STEEL
BOLTS
SURFACE PREP-SP
PAINT
REF DRAWING S32

| REV | DATE | DESCRIPTION | |
|---|---|---|---|
| 0 | SEP/10/06 | FOR APPROVAL | VS |

# RAINIER WELDING

19020 NE 84TH STREET - REDMOND, WA 98053
(425) 868-1300 FAX (425) 868-8872
STEEL AND ALUMINUM FABRICATING

PROJECT: TOLT BRIDGE No 1834A
THIS DRAWING INCLUDES: SOUTHSIDE EL. (LOOKING NORTH)
FOR: SNOHOMISH COUNTY OFFICIAL
DRAWN DATE 08/04/2006 CHK DATE 09/10/2006 DWG NUMBER 2707 - E7 △0

PRO DRAFT INC. PO# 676 PH:(504)568-6425
DRAWINGS PREPARED ON 3D-Xsteel File Name :- G (B)
Model Name: 725_102_TOLT_BRIDGE_541
Plot Date: 09/10/2006 12:04:31

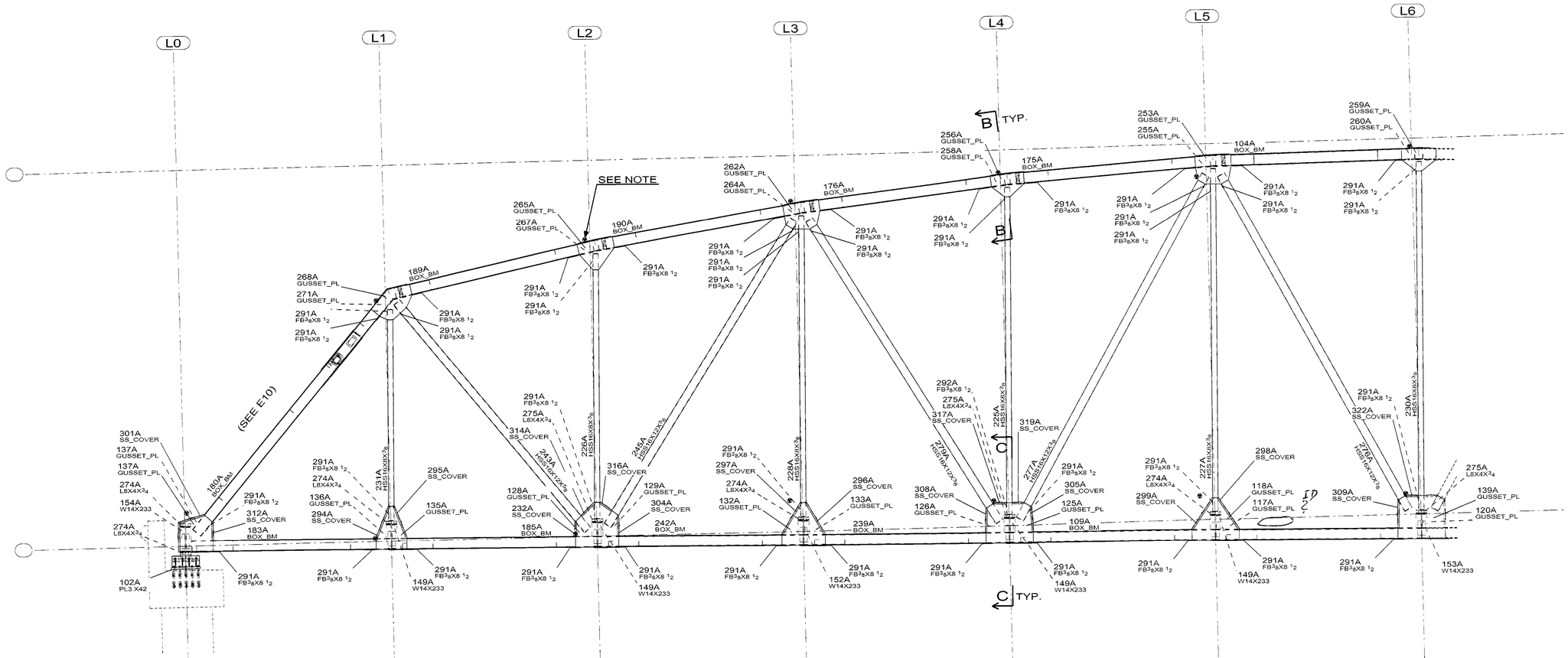


A - A

(LOOKING NORTH)

NOTE:

▼ - DENOTES ORIENTATION MARK FOR GUSSETS

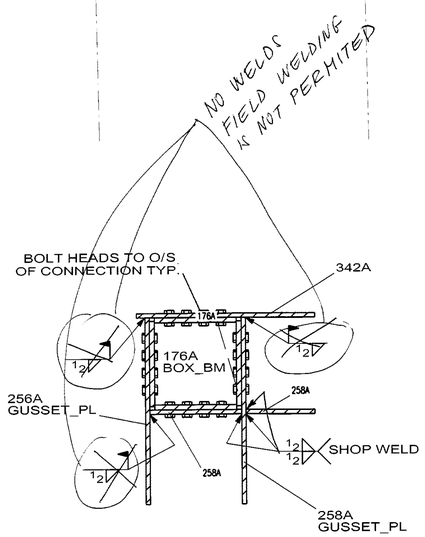


B - B

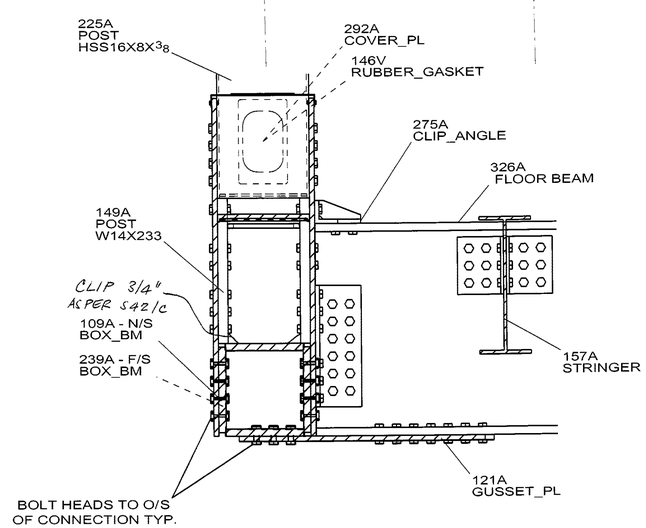


C - C

☐ CONFORMS TO DESIGN CONCEPT
☐ CONFORMS TO DESIGN CONCEPT WITH REVISIONS AS SHOWN
☒ NON-CONFORMING-REVISE & RESUBMIT
THIS SHOP DRAWING HAS BEEN REVIEWED FOR GENERAL CONFORMANCE WITH DESIGN CONCEPT ONLY AND DOES NOT RELIEVE THE FABRICATOR/VENDOR OF RESPONSIBILITY FOR CONFORMANCE WITH DESIGN DRAWINGS AND SPECIFICATIONS ALL OF WHICH HAVE PRIORITY OVER THIS SHOP DRAWING.
By A.F. Date 10/13/06
I.IN & ASSOCIATES, INC.

CONTRACTOR NOTE:
THIS DRAWING IS BEING SUBMITTED FOR APPROVAL AS REQUIRED. VERIFY OR SUPPLY ALL QUANTITIES, ALL DIMENSIONS, ALL INFORMATION, & ALL CONFIGURATIONS.

PRINT RECORD

| NO. | USE | DATE |
|---|---|---|
| | APPR. | |
| | APPR. | |
| | PURCH | |
| | FAB | |
| | FAB. OFFICE | |
| | Q.A. | |
| | DIST. | |
| | ERECT. | |

OPEN HOLES
WELD
STEEL
BOLTS
SURFACE PREP-SP
PAINT
REF.DRAWING S32

| REV | DATE | DESCRIPTION | VS |
|---|---|---|---|
| 0 | SEP/10/06 | FOR APPROVAL | |

# RAINIER WELDING

19020 NE 84TH STREET - REDMOND, WA 98053
(425) 868-1300 FAX (425) 868-8872
STEEL AND ALUMINUM FABRICATING

PROJECT: TOLT BRIDGE No 1834A
THIS DRAWING INCLUDES: SOUTHSIDE EL. (LOOKING NORTH)
FOR: SNOHOMISH COUNTY OFFICIAL
DRAWN DATE 08/04/2006 CHK DATE 09/10/2006 DWG NUMBER 2707 - E6 0

PRO DRAFT INC. PD# 676 PH:(604)985-8423
DRAWINGS PREPARED ON 3D-Xsteel File Name :- G [3]
Model Name: 725_102_TOLT_BRIDGE_541
Plot Date: 09/10/2006 12:04:23

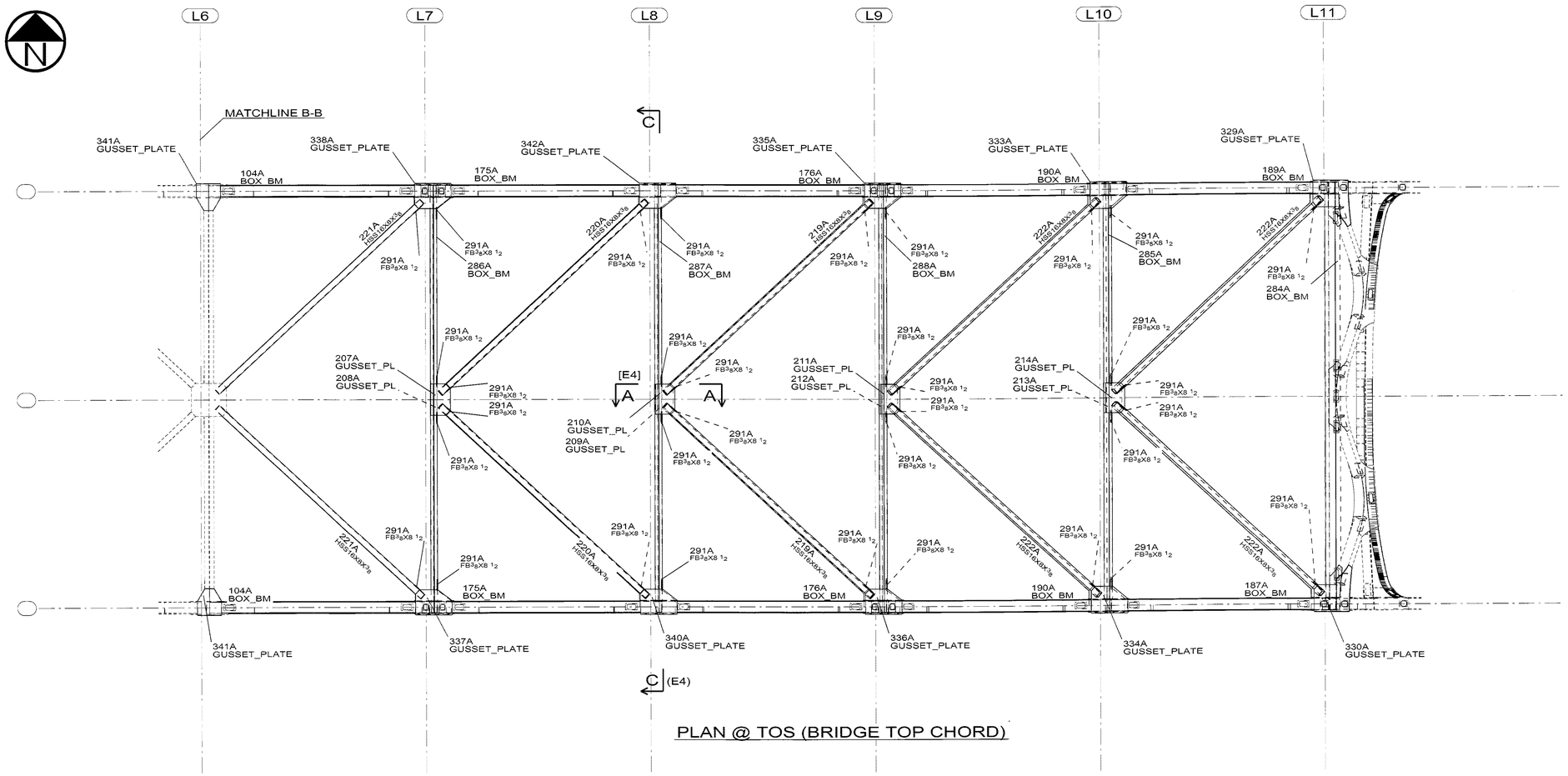


PLAN @ TOS (BRIDGE TOP CHORD)

☒ CONFORMS TO DESIGN CONCEPT
☐ CONFORMS TO DESIGN CONCEPT WITH REVISIONS AS SHOWN
☐ NON-CONFORMING–REVISE & RESUBMIT

THIS SHOP DRAWING HAS BEEN REVIEWED FOR GENERAL CONFORMANCE WITH DESIGN CONCEPT ONLY AND DOES NOT RELIEVE THE FABRICATOR/VENDOR OF RESPONSIBILITY FOR CONFORMANCE WITH DESIGN DRAWINGS AND SPECIFICATIONS ALL OF WHICH HAVE PRIORITY OVER THIS SHOP DRAWING.

By A.F. Date 10/13/06

I.IN & ASSOCIATES, INC.

CONTRACTOR NOTE:
THIS DRAWING IS BEING SUBMITTED FOR APPROVAL AS REQUIRED. VERIFY OR SUPPLY ALL QUANTITIES, ALL DIMENSIONS, ALL INFORMATION, & ALL CONFIGURATIONS.

PRINT RECORD

| NO. | USE | DATE |
|---|---|---|
| | APPR. | |
| | APPR. | |
| | PURCH | |
| | FAB | |
| | FAB. OFFICE | |
| | Q.A. | |
| | DIST. | |
| | ERECT. | |

OPEN HOLES
YIELD
STEEL
BOLTS
SURFACE PREP SP
PAINT
REF DRAWING S32

| REV | DATE | DESCRIPTION | |
|---|---|---|---|
| 0 | SEP/10/06 | FOR APPROVAL | VS |

# RAINIER WELDING

19020 NE 84TH STREET - REDMOND, WA 98053
(425) 868-1300 FAX (425) 868-8872
STEEL AND ALUMINUM FABRICATING

PROJECT: TOLT BRIDGE No 1834A
THIS DRAWING INCLUDES: PLAN @ TOS (BRIDGE TOP)
FOR: SNOHOMISH COUNTY OFFICIAL
DRAWN DATE 08/04/2006 CHK DATE 09/10/2006 DWG NUMBER 2707 - E5

PRO DRAFT INC. PO# 676 PH:(904)589-6425
DRAWINGS PREPARED ON 3D-Xsteel File Name :- G [4]
Model Name: 725_102_TOLT_BRIDGE_541
Plot Date: 09/10/2006 12:04:15

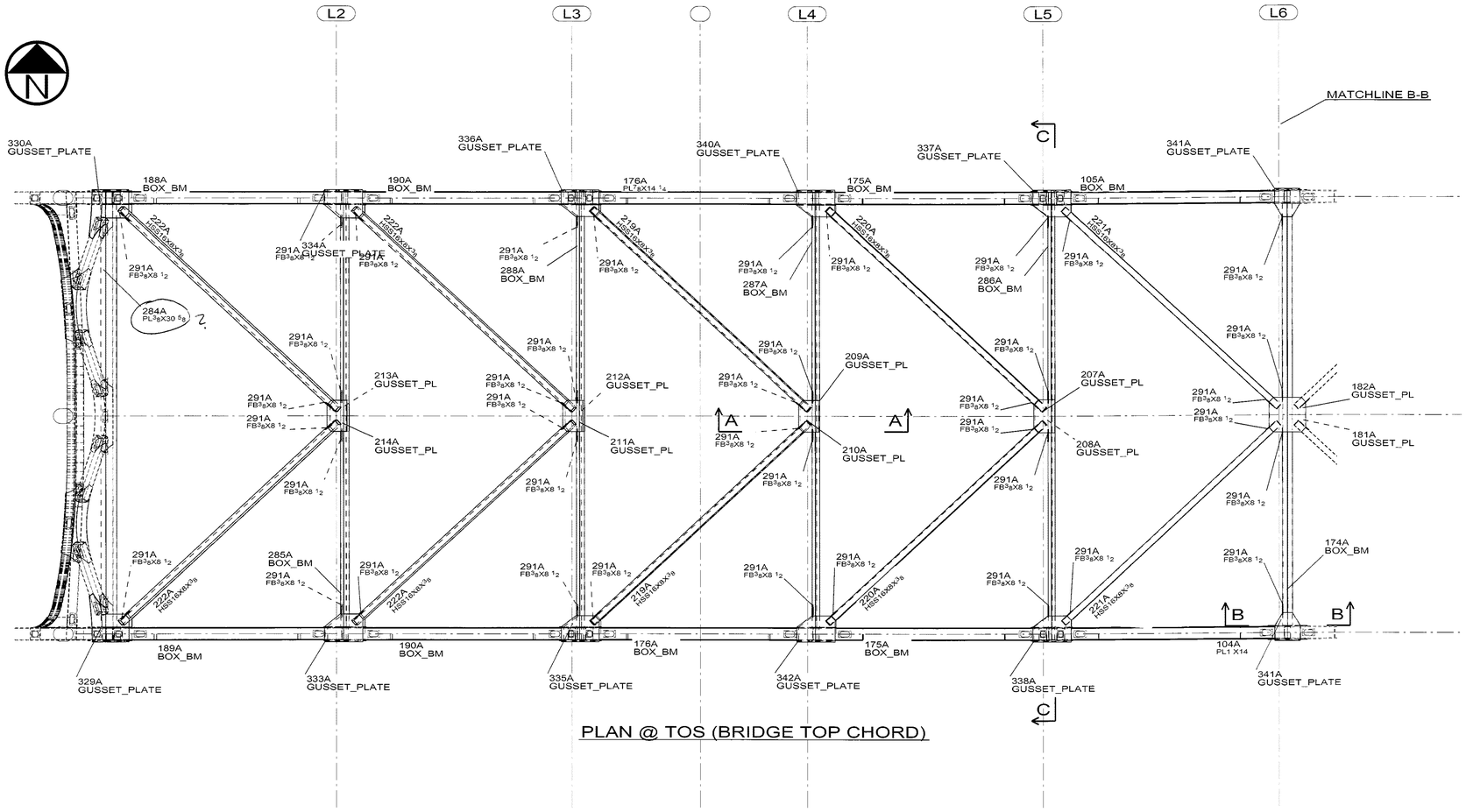


PLAN @ TOS (BRIDGE TOP CHORD)

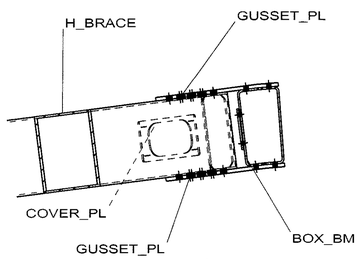


A - A

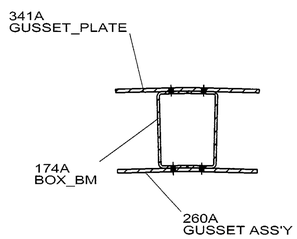


B - B

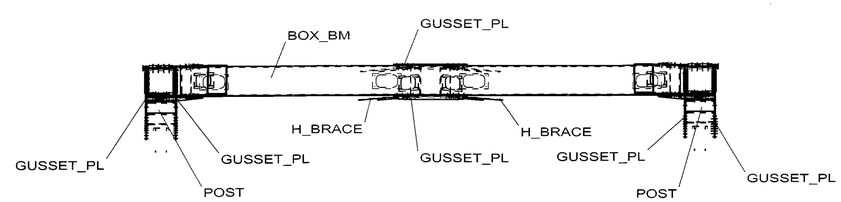


C - C

☐ CONFORMS TO DESIGN CONCEPT
☒ CONFORMS TO DESIGN CONCEPT WITH REVISIONS AS SHOWN
☐ NON-CONFORMING–REVISE & RESUBMIT

THIS SHOP DRAWING HAS BEEN REVIEWED FOR GENERAL CONFORMANCE WITH DESIGN CONCEPT ONLY AND DOES NOT RELIEVE THE FABRICATOR/VENDOR OF RESPONSIBILITY FOR CONFORMANCE WITH DESIGN DRAWINGS AND SPECIFICATIONS ALL OF WHICH HAVE PRIORITY OVER THIS SHOP DRAWING.

By A.F. Date 10/13/06

I.IN & ASSOCIATES, INC.

CONTRACTOR NOTE:
THIS DRAWING IS BEING SUBMITTED FOR APPROVAL AS REQUIRED. VERIFY OR SUPPLY ALL QUANTITIES, ALL DIMENSIONS, ALL INFORMATION, & ALL CONFIGURATIONS.

PRINT RECORD

| NO. | USE | DATE |
|---|---|---|
| | APPR. | |
| | APPR. | |
| | PURCH | |
| | FAB | |
| | FAB. OFFICE | |
| | Q.A. | |
| | DIST. | |
| | ERECT. | |

OPEN HOLES
WELD
STEEL
BOLTS
SURFACE PREP.SP
PAINT
REF DRAWING S32

| REV | DATE | DESCRIPTION | |
|---|---|---|---|
| 0 | SEP/10/06 | FOR APPROVAL | VS |

# RAINIER WELDING

19020 NE 84TH STREET - REDMOND, WA 98053
(425) 868-1300 FAX (425) 868-8872
STEEL AND ALUMINUM FABRICATING

PROJECT: TOLT BRIDGE No 1834A
THIS DRAWING INCLUDES: PLAN @ TOS (BRIDGE TOP)
FOR: SNOHOMISH COUNTY OFFICIAL
DRAWN DATE 08/04/2006 CHK DATE 09/10/2006 DWG NUMBER 2707 - E4 3

PRO DRAFT INC. PO# 676 PH:(604)689-6425
DRAWINGS PREPARED ON: 3D-Xsteel File Name :- G [3]
Model Name: 725_102_TOLT_BRIDGE_541
Plot Date: 09/10/2006 12:04:05

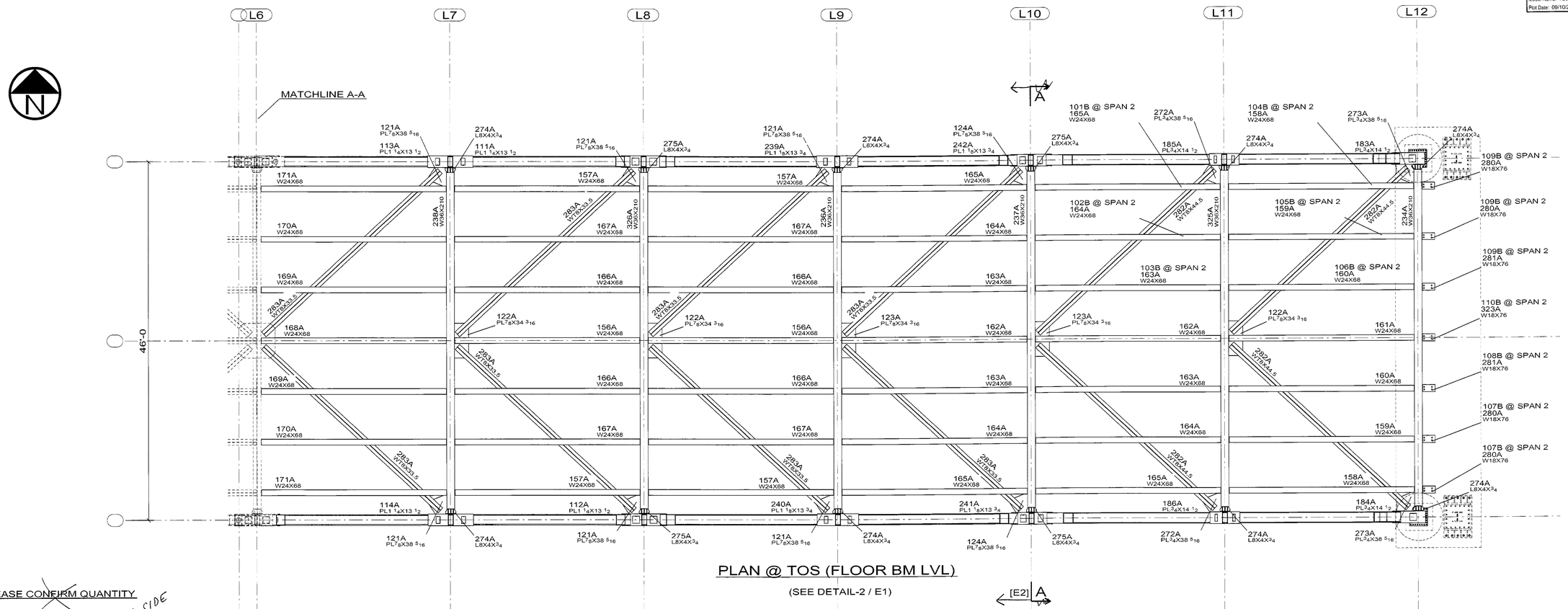


PLAN @ TOS (FLOOR BM LVL)

(SEE DETAIL-2 / E1)

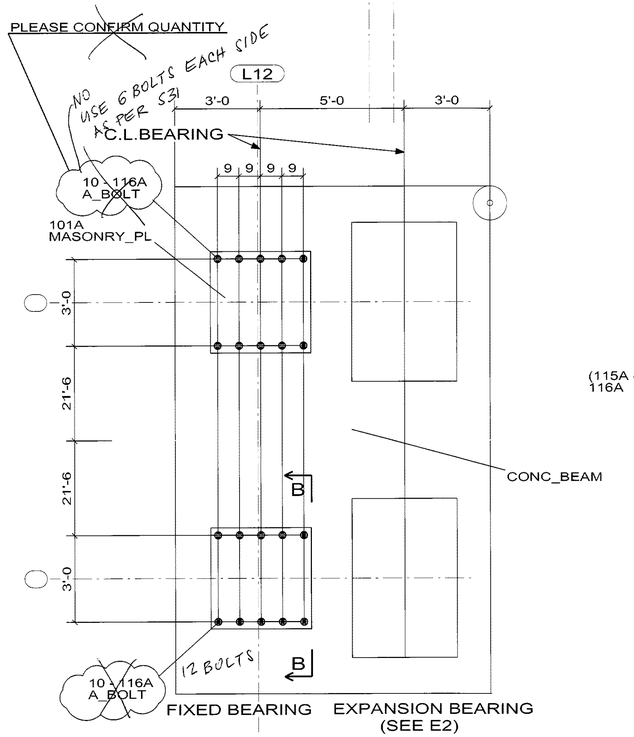


PIER 2

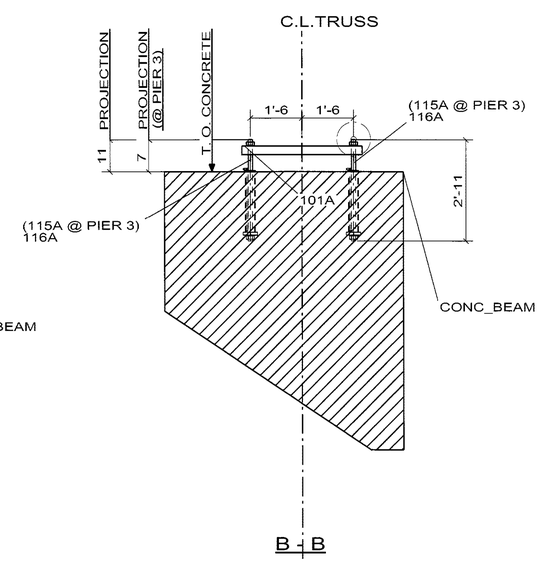


B - B

☐ CONFORMS TO DESIGN CONCEPT
☐ CONFORMS TO DESIGN CONCEPT WITH REVISIONS AS SHOWN
☒ NON-CONFORMING-REVISE & RESUBMIT

THIS SHOP DRAWING HAS BEEN REVIEWED FOR GENERAL CONFORMANCE WITH DESIGN CONCEPT ONLY AND DOES NOT RELIEVE THE FABRICATOR/VENDOR OF RESPONSIBILITY FOR CONFORMANCE WITH DESIGN DRAWINGS AND SPECIFICATIONS ALL OF WHICH HAVE PRIORITY OVER THIS SHOP DRAWING.

By A.F. Date 10/13/06

LIN & ASSOCIATES, INC.

CONTRACTOR NOTE:
THIS DRAWING IS BEING SUBMITTED FOR APPROVAL AS REQUIRED. VERIFY OR SUPPLY ALL QUANTITIES, ALL DIMENSIONS, ALL INFORMATION, & ALL CONFIGURATIONS.

PRINT RECORD

| NO. | USE | DATE |
|---|---|---|
| | APPR. | |
| | APPR. | |
| | PURCH | |
| | FAB | |
| | FAB. OFFICE | |
| | Q.A. | |
| | DIST. | |
| | ERECT. | |

OPEN HOLES
WELD
STEEL
BOLTS
SURFACE PREP-SP
PAINT
REF.DRAWING S32

| REV | DATE | DESCRIPTION | |
|---|---|---|---|
| 0 | SEP/10/06 | FOR APPROVAL | VS |

# RAINIER WELDING

19020 NE 84TH STREET - REDMOND, WA 98053
(425) 868-1300 FAX (425) 868-8872
STEEL AND ALUMINUM FABRICATING

PROJECT: TOLT BRIDGE No 1834A
THIS DRAWING INCLUDES: PLAN @ TOS (DECK BM LVL)
FOR: SNOHOMISH COUNTY OFFICIAL
DRAWN DATE 07/18/2006 | CHK DATE 09/10/2006 | DWG NUMBER 2707 - E3 | 0

PRO DRAFT INC. PD# 676 PH:(604)589-6423
DRAWINGS PREPARED ON JD-Xsizel File Name :- G [2]
Model Name: 725_102_TOLT_BRIDGE_541
Plot Date: 09/10/2006 12:02:53

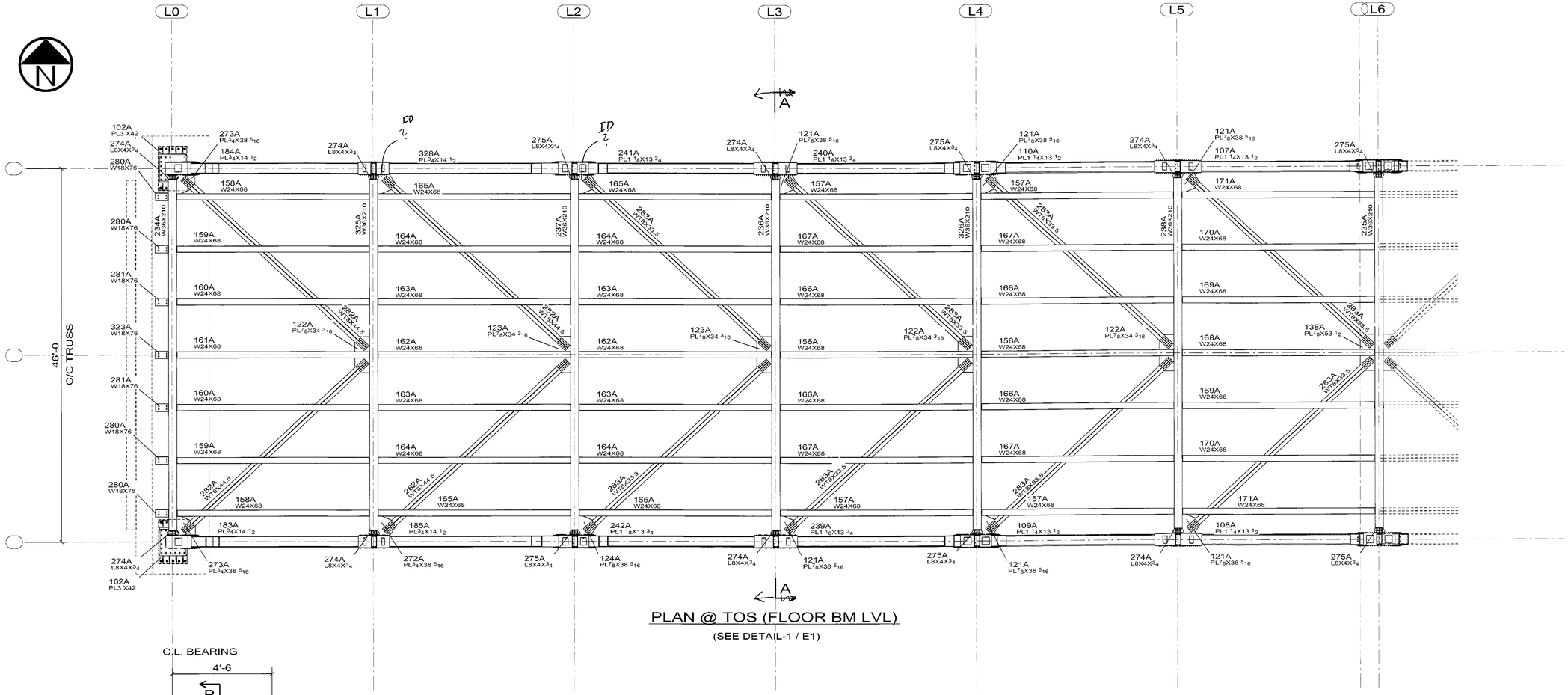


PLAN @ TOS (FLOOR BM LVL)

(SEE DETAIL-1 / E1)

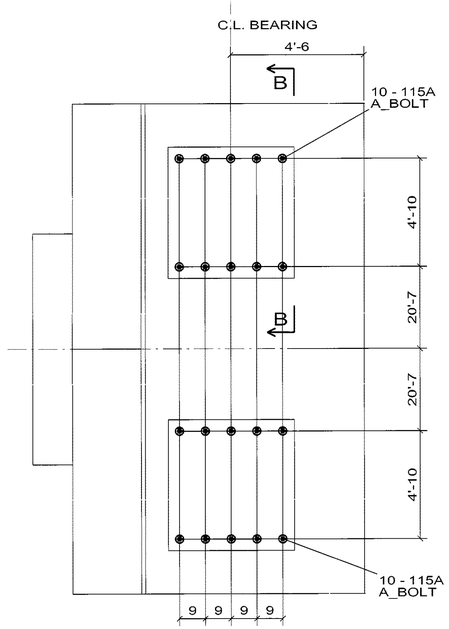


PIER 1
EXPANSION BEARING

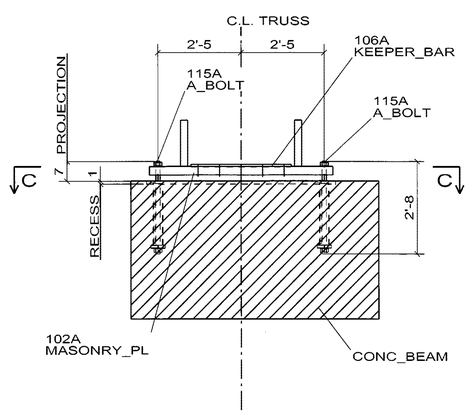


B - B

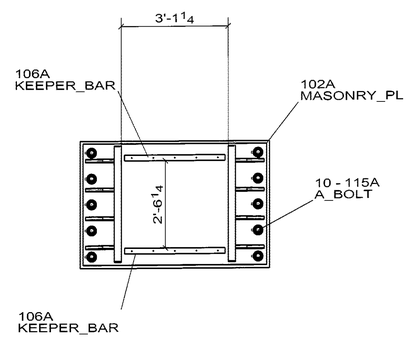


C - C

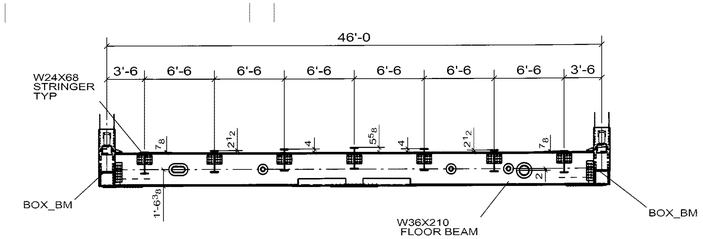


A - A

☐ CONFORMS TO DESIGN CONCEPT
☒ CONFORMS TO DESIGN CONCEPT WITH REVISIONS AS SHOWN
☐ NON-CONFORMING-REVISE & RESUBMIT

THIS SHOP DRAWING HAS BEEN REVIEWED FOR GENERAL CONFORMANCE WITH DESIGN CONCEPT ONLY AND DOES NOT RELIEVE THE FABRICATOR/VENDOR OF RESPONSIBILITY FOR CONFORMANCE WITH DESIGN DRAWINGS AND SPECIFICATIONS ALL OF WHICH HAVE PRIORITY OVER THIS SHOP DRAWING.

By A.F. Date 10/13/06

I.IN & ASSOCIATES, INC.

CONTRACTOR NOTE:
THIS DRAWING IS BEING SUBMITTED FOR APPROVAL AS REQUIRED. VERIFY OR SUPPLY ALL QUANTITIES, ALL DIMENSIONS, ALL INFORMATION, & ALL CONFIGURATIONS.

PRINT RECORD

| NO. | USE | DATE |
|---|---|---|
| | APPR. | |
| | APPR. | |
| | PURCH | |
| | FAB | |
| | FAB. OFFICE | |
| | Q.A. | |
| | DIST. | |
| | ERECT. | |

OPEN HOLES
WELD
STEEL
BOLTS
SURFACE PREP-SP
PAINT
REF DRAWING S32

| REV | DATE | DESCRIPTION | |
|---|---|---|---|
| 0 | SEP/10/06 | FOR APPROVAL | VS |

# RAINIER WELDING

19020 NE 84TH STREET - REDMOND, WA 98053
(425) 868-1300 FAX (425) 868-8872
STEEL AND ALUMINUM FABRICATING

PROJECT: TOLT BRIDGE No 1834A
THIS DRAWING INCLUDES: PLAN @ TOS (DECK BM LVL)
FOR: SNOHOMISH COUNTY OFFICIAL
DRAWN DATE 06/27/2006 CHK DATE 09/10/2006 DWG NUMBER 2707 - E2 △0