No to SHIP	SHIP MARK	No. PIECES	PIECE MARK	DESCRIPTION	LENGTH	UNIT WT.	GRADE	REMARKS
1	102B			STRINGER		1787		
		1	102B	W24X68	24'-10 1/16"	1699	AASHTO M 270 GR. 50	
		4	p132	L8X8X1/2	0'-10"	22	AASHTO M 270 GR. 50	
		12	b1	7/8Ø A325	2 3/4			

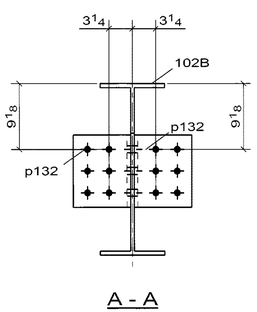

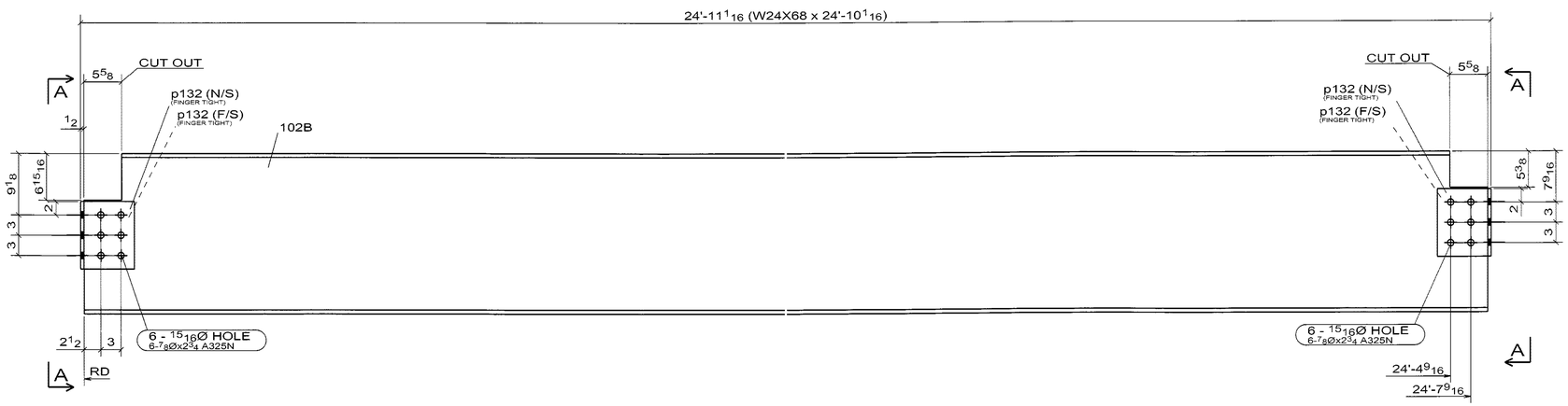

NOTE:

- SEE 2SK FOR WELDED STUD LAYOUT

1 - STRINGER - 102B

(SPAN 2)

WELD NOTE FOR ANY ASSEMBLY REQUIRING TACK WELDS:
- ALL TACK WELDS ARE TO BE MADE IN THE WELD JOINT ONLY

☒ CONFORMS TO DESIGN CONCEPT
☐ CONFORMS TO DESIGN CONCEPT WITH REVISIONS AS SHOWN
☐ NON-CONFORMING–REVISE & RESUBMIT

THIS SHOP DRAWING HAS BEEN REVIEWED FOR GENERAL CONFORMANCE WITH DESIGN CONCEPT ONLY AND DOES NOT RELIEVE THE FABRICATOR/VENDOR OF RESPONSIBILITY FOR CONFORMANCE WITH DESIGN DRAWINGS AND SPECIFICATIONS ALL OF WHICH HAVE PRIORITY OVER THIS SHOP DRAWING.

By A.F. Date 10/13/06

LIN & ASSOCIATES, INC.

CONTRACTOR NOTE:
THIS DRAWING IS BEING SUBMITTED FOR APPROVAL AS REQUIRED. VERIFY OR SUPPLY ALL QUANTITIES, ALL DIMENSIONS, ALL INFORMATION, & ALL CONFIGURATIONS.

PRINT RECORD

NO.	USE	DATE
	APPR.	
	APPR.	
	PURCH	
	FAB	
	FAB. OFFICE	
	Q.A.	
	DIST.	
	ERECT.	

OPEN HOLES 15/16 Ø U/N
WELD BRIDGE WELDING CODE: D1.5
STEEL AS NOTED
BOLTS
SURFACE PREP-SP
PAINT SEE SPECS
REF DRAWING E3

REV	DATE	DESCRIPTION	
0	SEP/10/06	FOR APPROVAL	VS

RAINIER WELDING
19020 NE 84TH STREET - REDMOND, WA 98053
(425) 868-1300 FAX (425) 868-8872
STEEL AND ALUMINUM FABRICATING

PROJECT TOLT BRIDGE No 1834A
THIS DRAWING INCLUDES
FOR SNOHOMISH COUNTY OFFICIAL
DRAWN DJ DATE 08/03/2006
CHK DSC DATE 09/10/2006
DWG NUMBER 2707 - 102B 0

PRO DRAFT INC. PD# 676 Ph:(604)589-6425
DRAWINGS PREPARED ON 3D-Xpecl File Name - A [102.B]
Model Name: 725_102_TOLT_BRIDGE_541
Plot Date: 09/10/2006 12:16:32

No to SHIP	SHIP MARK	No PIECES	PIECE MARK	DESCRIPTION	LENGTH	UNIT WT.	GRADE	REMARKS
1	112A			BOX_BM		6001		
		1	112A	PL1 1/4X13 1/2	24'-11 13/16"	1438	AASHTO M 270 GR. 50	FCM/V
		1	p13	PL1 1/4X14 3/4	24'-11 13/16"	1571	AASHTO M 270 GR. 50	FCM/V
		1	p15	PL1 1/4X14 3/4	24'-11 13/16"	1571	AASHTO M 270 GR. 50	FCM/V
		1	p16	PL1 1/4X13 1/2	24'-11 13/16"	1382	AASHTO M 270 GR. 50	FCM/V
		2	p119	PL3/8X13 1/2	1'-1 1/2"	19	AASHTO M 270 GR. 50	

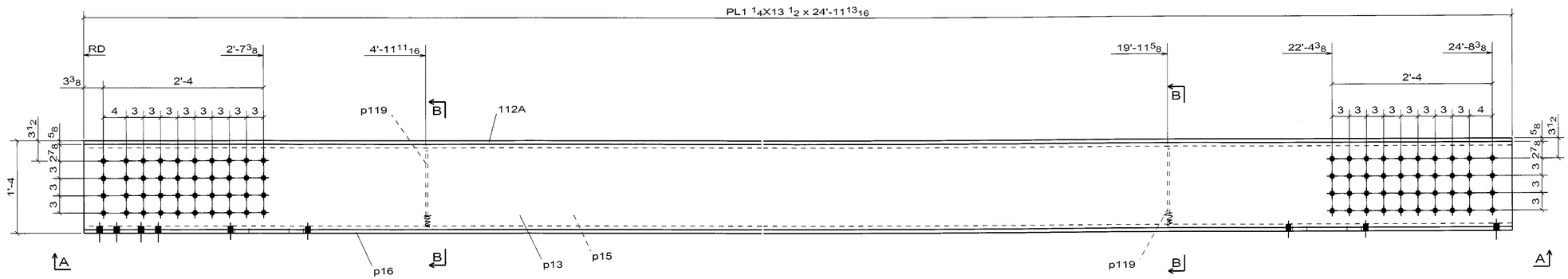

SIDE VIEW

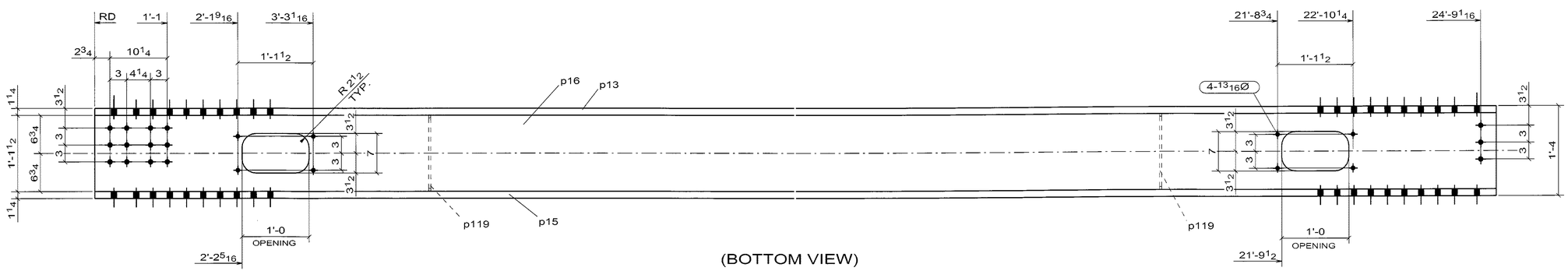

(BOTTOM VIEW)

A - A

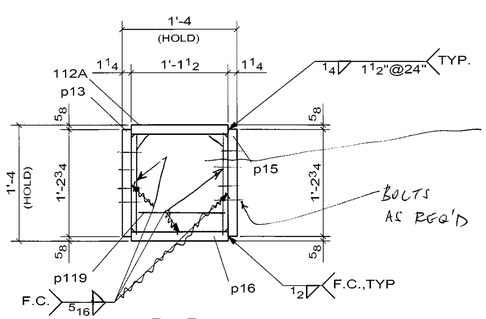

B - B

REVISE DIAPH. PL'S p119
SEE NOTE & SKETCH ON 107 A

BOLTS AS REQ'D

1 - BOX_BM -112A

ADD CAMBER PER S33
OR SHOW THAT IT HAS BEEN TAKEN INTO ACCOUNT

☐ CONFORMS TO DESIGN CONCEPT
☐ CONFORMS TO DESIGN CONCEPT WITH REVISIONS AS SHOWN
☒ NON-CONFORMING–REVISE & RESUBMIT

THIS SHOP DRAWING HAS BEEN REVIEWED FOR GENERAL CONFORMANCE WITH DESIGN CONCEPT ONLY AND DOES NOT RELIEVE THE FABRICATOR/VENDOR OF RESPONSIBILITY FOR CONFORMANCE WITH DESIGN DRAWINGS AND SPECIFICATIONS ALL OF WHICH HAVE PRIORITY OVER THIS SHOP DRAWING.

By A.F. Date 10/13/06

I.IN & ASSOCIATES, INC.

CONTRACTOR NOTE:
THIS DRAWING IS BEING SUBMITTED FOR APPROVAL AS REQUIRED. VERIFY OR SUPPLY ALL QUANTITIES, ALL DIMENSIONS, ALL INFORMATION, & ALL CONFIGURATIONS.

PRINT RECORD

NO.	USE	DATE
	APPR.	
	APPR.	
	PURCH	
	FAB	
	FAB. OFFICE	
	Q.A.	
	DIST.	
	ERECT.	

OPEN HOLES 15/16 Ø U/N
WELD BRIDGE WELDING CODE: D1.5
STEEL AS NOTED
BOLTS
SURFACE PREP-SP
PAINT SEE SPECS
REF DRAWING E3

REV	DATE	DESCRIPTION
0	SEP/10/06	FOR APPROVAL

RAINIER WELDING

19020 NE 84TH STREET - REDMOND, WA 98053
(425) 868-1300 FAX (425) 868-8872
STEEL AND ALUMINUM FABRICATING

PROJECT: TOLT BRIDGE No 1834A
THIS DRAWING INCLUDES:
FOR: SNOHOMISH COUNTY OFFICIAL
DRAWN: DJ DATE: 07/31/2006 CHK: DSC DATE: 09/10/2006 DWG NUMBER: 2707 - 112A 0

WELD NOTE FOR ANY ASSEMBLY REQUIRING TACK WELDS:
- ALL TACK WELDS ARE TO BE MADE IN THE WELD JOINT ONLY

PRO DRAFT INC. PO# 676 PH:(604)689-8425
DRAWINGS PREPARED ON 3D-Xpert File Name - A [112-A]
Model Name: 728_102_TOLT_BRIDGE_541
Plot Date: 09/10/2006 12:12:49

No to SHIP	SHIP MARK	No PIECES	PIECE MARK	DESCRIPTION	LENGTH	UNIT WT.	GRADE	REMARKS
1	111A			BOX_BM		6001		
		1	111A	PL1 1/4X13 1/2	24'-11 13/16"	1438	AASHTO M 270 GR. 50	FCM/V
		1	p13	PL1 1/4X14 3/4	24'-11 13/16"	1571	AASHTO M 270 GR. 50	FCM/V
		1	p15	PL1 1/4X14 3/4	24'-11 13/16"	1571	AASHTO M 270 GR. 50	FCM/V
		1	p16	PL1 1/4X13 1/2	24'-11 13/16"	1382	AASHTO M 270 GR. 50	FCM/V
		2	p119	PL3/8X13 1/2	1'-1 1/2"	19	AASHTO M 270 GR. 50	

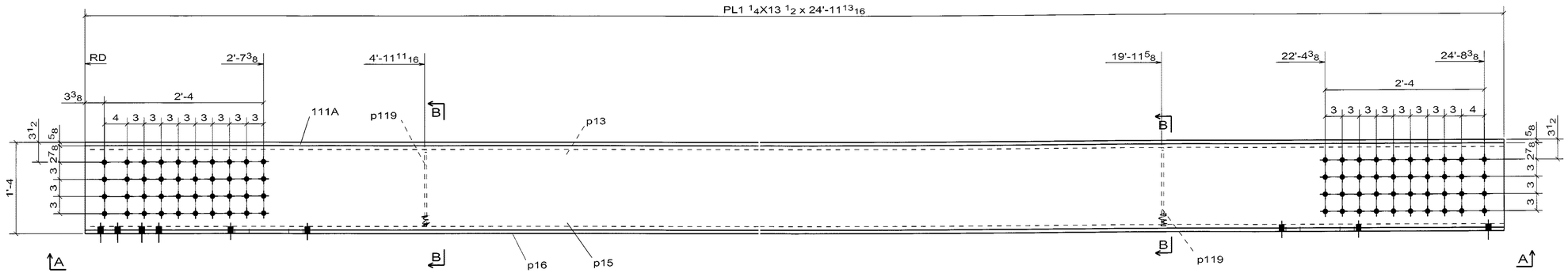

SIDE VIEW

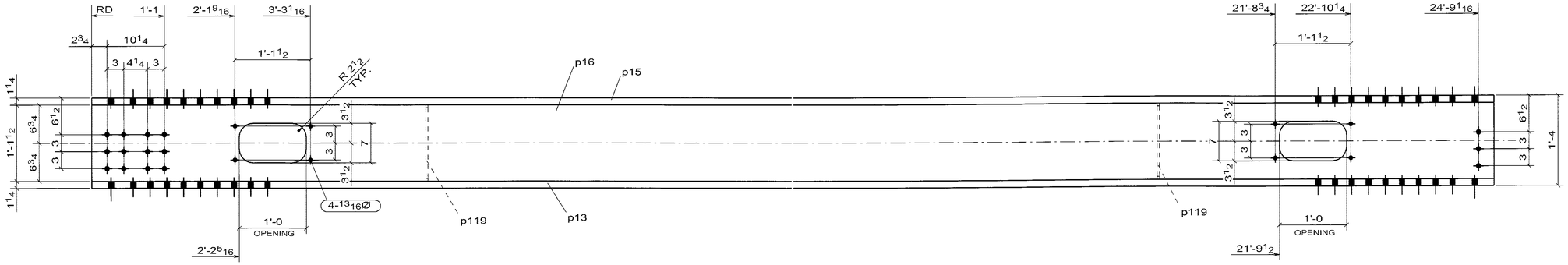

(BOTTOM VIEW)

A - A

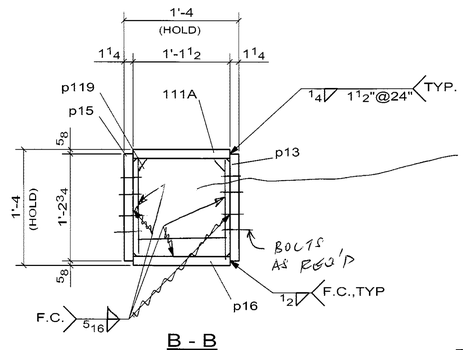

REVISE DIAPH. PL'S p119
SEE NOTE & SKETCH ON 107A

B - B

1 - BOX_BM -111A

ADD CAMBER PER S33
OR SHOW THAT IT HAS BEEN
TAKEN INTO ACCOUNT

☐ CONFORMS TO DESIGN CONCEPT
☐ CONFORMS TO DESIGN CONCEPT WITH REVISIONS AS SHOWN
☒ NON-CONFORMING–REVISE & RESUBMIT

THIS SHOP DRAWING HAS BEEN REVIEWED FOR GENERAL CONFORMANCE WITH DESIGN CONCEPT ONLY AND DOES NOT RELIEVE THE FABRICATOR/VENDOR OF RESPONSIBILITY FOR CONFORMANCE WITH DESIGN DRAWINGS AND SPECIFICATIONS ALL OF WHICH HAVE PRIORITY OVER THIS SHOP DRAWING.

By A.F. Date 10/13/06

I.IN & ASSOCIATES, INC.

CONTRACTOR NOTE:
THIS DRAWING IS BEING SUBMITTED FOR APPROVAL AS REQUIRED, VERIFY OR SUPPLY ALL QUANTITIES, ALL DIMENSIONS, ALL INFORMATION, & ALL CONFIGURATIONS.

PRINT RECORD

NO.	USE	DATE
	APPR.	
	APPR.	
	PURCH	
	FAB	
	FAB. OFFICE	
	Q.A.	
	DIST.	
	ERECT.	

OPEN HOLES 15/16 Ø U/N
WELD BRIDGE WELDING CODE: D1.5
STEEL AS NOTED
BOLTS
SURFACE PREP-SP
PAINT SEE SPECS
REF DRAWING E3

REV	DATE	DESCRIPTION	VS
0	SEP/10/06	FOR APPROVAL	

RAINIER WELDING

19020 NE 84TH STREET - REDMOND, WA 98053
(425) 868-1300 FAX (425) 868-8872
STEEL AND ALUMINUM FABRICATING

PROJECT TOLT BRIDGE No 1834A
THIS DRAWING INCLUDES
FOR SNOHOMISH COUNTY OFFICIAL
DRAWN DJ DATE 07/31/2006 CHK. DSC DATE 09/10/2006 DWG NUMBER 2707 - 111A 0

WELD NOTE FOR ANY ASSEMBLY REQUIRING TACK WELDS:
- ALL TACK WELDS ARE TO BE MADE IN THE WELD JOINT ONLY

PRO DRAFT INC PD# 676 PH:(604)589-6425
DRAWINGS PREPARED ON 3D-Xsteel File Name :- A [111.A]
Model Name: 725_102_TOLT_BRIDGE_541
Plot Date: 09/10/2006 12:12:43

No to SHIP	SHIP MARK	No. PIECES	PIECE MARK	DESCRIPTION	LENGTH	UNIT WT	GRADE	REMARKS
1	110A			BOX_BM		6001		
		1	110A	PL1 1/4X13 1/2	24'-11 13/16"	1438	AASHTO M 270 GR. 50	FCM/V
		1	p10	PL1 1/4X14 3/4	24'-11 13/16"	1571	AASHTO M 270 GR. 50	FCM/V
		1	p11	PL1 1/4X14 3/4	24'-11 13/16"	1571	AASHTO M 270 GR. 50	FCM/V
		1	p16	PL1 1/4X13 1/2	24'-11 13/16"	1382	AASHTO M 270 GR. 50	FCM/V
		2	p119	PL3/8X13 1/2	1'-1 1/2"	19	AASHTO M 270 GR. 50	

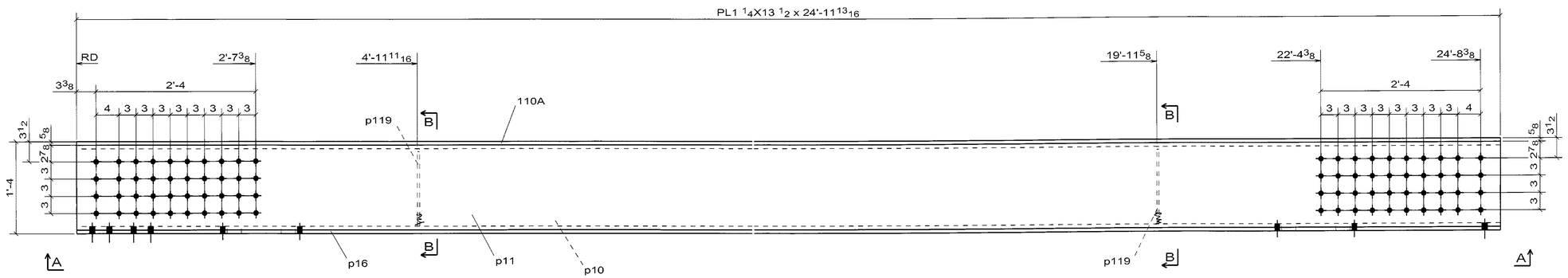

SIDE VIEW

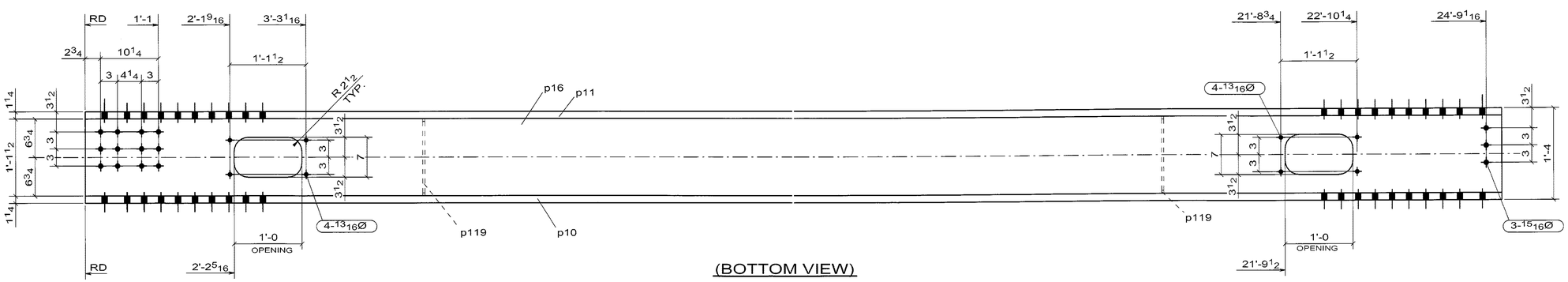

(BOTTOM VIEW)

A - A

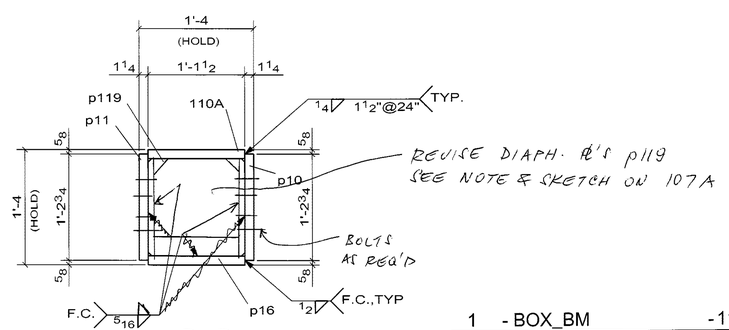

B - B

1 - BOX_BM -110A

WELD NOTE FOR ANY ASSEMBLY REQUIRING TACK WELDS:
- ALL TACK WELDS ARE TO BE MADE IN THE WELD JOINT ONLY

ADD CAMBER PER RFI
OR SHOW THAT IT HAS BEEN
TAKEN INTO ACCOUNT

☐ CONFORMS TO DESIGN CONCEPT
☐ CONFORMS TO DESIGN CONCEPT WITH REVISIONS AS SHOWN
☒ NON-CONFORMING–REVISE & RESUBMIT

THIS SHOP DRAWING HAS BEEN REVIEWED FOR GENERAL CONFORMANCE WITH DESIGN CONCEPT ONLY AND DOES NOT RELIEVE THE FABRICATOR/VENDOR OF RESPONSIBILITY FOR CONFORMANCE WITH DESIGN DRAWINGS AND SPECIFICATIONS ALL OF WHICH HAVE PRIORITY OVER THIS SHOP DRAWING.

By A.F. Date 10/13/06

I.IN & ASSOCIATES, INC.

CONTRACTOR NOTE:
THIS DRAWING IS BEING SUBMITTED FOR APPROVAL AS REQUIRED. VERIFY OR SUPPLY ALL QUANTITIES, ALL DIMENSIONS, ALL INFORMATION, & ALL CONFIGURATIONS.

PRINT RECORD

NO.	USE	DATE
	APPR.	
	APPR.	
	PURCH	
	FAB	
	FAB. OFFICE	
	Q.A.	
	DIST.	
	ERECT.	

OPEN HOLES 15/16 Ø U/N
WELD BRIDGE WELDING CODE: D1.5
STEEL AS NOTED
BOLTS
SURFACE PREP-SP
PAINT SEE SPECS
REF DRAWING E2

REV	DATE	DESCRIPTION	VS
0	SEP/10/06	FOR APPROVAL	

RAINIER WELDING
19020 NE 84TH STREET - REDMOND, WA 98053
(425) 868-1300 FAX (425) 868-8872
STEEL AND ALUMINUM FABRICATING

PROJECT TOLT BRIDGE No 1834A
THIS DRAWING INCLUDES
FOR SNOHOMISH COUNTY OFFICIAL
DRAWN DJ DATE 07/31/2006 CHK DSC DATE 09/10/2006 DWG NUMBER 2707 - 110A 0

PRO DRAFT INC. PO# 676 PH (604)689-9423
DRAWINGS PREPARED ON 3D-Xsteel File Name :- A [110.A]
Model Name: 725_102_TOLT_BRIDGE_541
Plot Date: 09/10/2006 12:12:37

No to SHIP	SHIP MARK	No PIECES	PIECE MARK	DESCRIPTION	LENGTH	UNIT WT.	GRADE	REMARKS
1	109A			BOX_BM		6001		
		1	109A	PL1 1/4X13 1/2	24'-11 13/16"	1438	AASHTO M 270 GR. 50	FCM/V
		1	p10	PL1 1/4X14 3/4	24'-11 13/16"	1571	AASHTO M 270 GR. 50	FCM/V
		1	p11	PL1 1/4X14 3/4	24'-11 13/16"	1571	AASHTO M 270 GR. 50	FCM/V
		1	p16	PL1 1/4X13 1/2	24'-11 13/16"	1382	AASHTO M 270 GR. 50	FCM/V
		2	p119	PL3/8X13 1/2	1'-1 1/2"	19	AASHTO M 270 GR. 50	

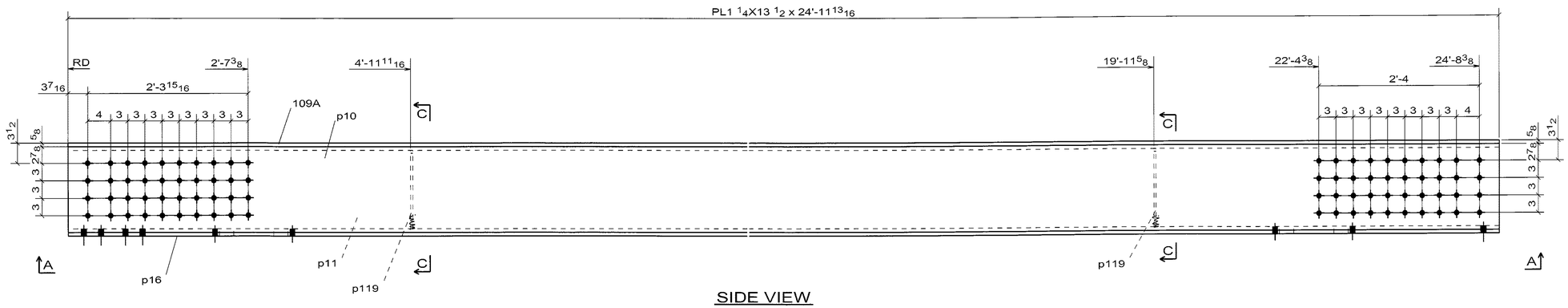

SIDE VIEW

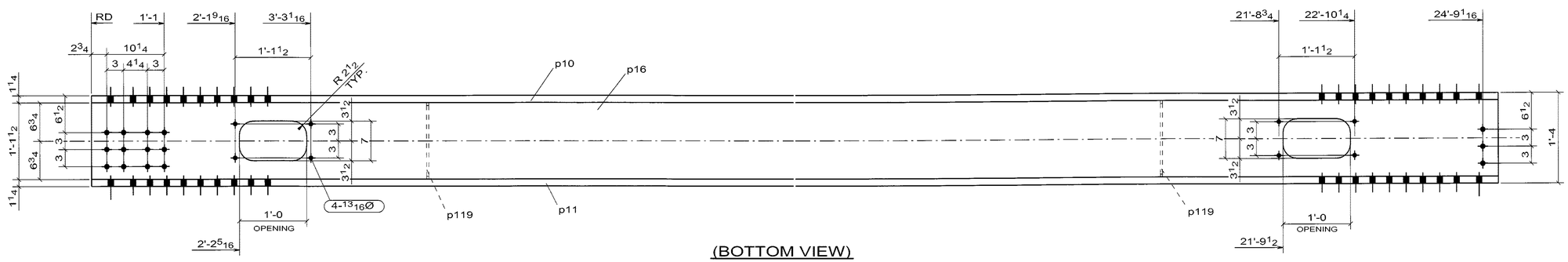

(BOTTOM VIEW)

A - A

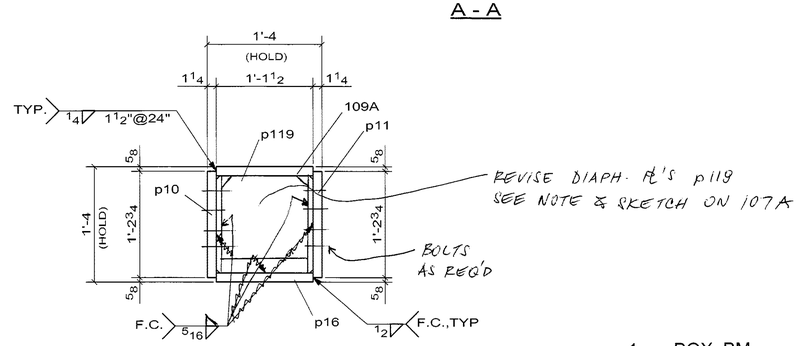

C - C

1 - BOX_BM -109A

ADD CAMBER RE 833
OR SHOW THAT IT HAS BEEN TAKEN INTO ACCOUNT

☐ CONFORMS TO DESIGN CONCEPT
☐ CONFORMS TO DESIGN CONCEPT WITH REVISIONS AS SHOWN
☒ NON-CONFORMING-REVISE & RESUBMIT

THIS SHOP DRAWING HAS BEEN REVIEWED FOR GENERAL CONFORMANCE WITH DESIGN CONCEPT ONLY AND DOES NOT RELIEVE THE FABRICATOR/VENDOR OF RESPONSIBILITY FOR CONFORMANCE WITH DESIGN DRAWINGS AND SPECIFICATIONS ALL OF WHICH HAVE PRIORITY OVER THIS SHOP DRAWING.

By A.F. Date 10/13/06

LIN & ASSOCIATES, INC.

CONTRACTOR NOTE:
THIS DRAWING IS BEING SUBMITTED FOR APPROVAL AS REQUIRED. VERIFY OR SUPPLY ALL QUANTITIES, ALL DIMENSIONS, ALL INFORMATION, & ALL CONFIGURATIONS.

PRINT RECORD			OPEN HOLES 15/16 Ø U/N
NO.	USE	DATE	WELD BRIDGE WELDING CODE: D1.5
	APPR.		STEEL AS NOTED
	APPR.		BOLTS
	PURCH		SURFACE PREP-SP
	FAB		PAINT SEE SPECS
	FAB. OFFICE		REF DRAWING E2
	Q.A.		
	DIST.		
	ERECT.		

REV	DATE	DESCRIPTION	VS
0	SEP/10/06	FOR APPROVAL	VS

RAINIER WELDING

19020 NE 84TH STREET - REDMOND, WA 98053
(425) 868-1300 FAX (425) 868-8872
STEEL AND ALUMINUM FABRICATING

PROJECT: TOLT BRIDGE No 1834A
THIS DRAWING INCLUDES
FOR: SNOHOMISH COUNTY OFFICIAL
DRAWN: DJ DATE: 07/31/2006 CHK: DSC DATE: 09/10/2006 DWG NUMBER: 2707 - 109A 0

WELD NOTE FOR ANY ASSEMBLY REQUIRING TACK WELDS:
- ALL TACK WELDS ARE TO BE MADE IN THE WELD JOINT ONLY

PRO DRAFT INC. PD# 676 PH:(604)589-6425
DRAWINGS PREPARED ON: 3D-Xsteel File Name :- A [109.A]
Model Name: 725_102_TOLT_BRIDGE_541
Plot Date: 09/10/2006 12:12:32

No to SHIP	SHIP MARK	No PIECES	PIECE MARK	DESCRIPTION	LENGTH	UNIT WT	GRADE	REMARKS
1	108A			BOX_BM		6001		
		1	108A	PL1 1/4X13 1/2	24'-11 13/16"	1438	AASHTO M 270 GR. 50	FCM/V
		1	p8	PL1 1/4X14 3/4	24'-11 13/16"	1571	AASHTO M 270 GR. 50	FCM/V
		1	p9	PL1 1/4X14 3/4	24'-11 13/16"	1571	AASHTO M 270 GR. 50	FCM/V
		1	p17	PL1 1/4X13 1/2	24'-11 13/16"	1382	AASHTO M 270 GR. 50	FCM/V
		2	p119	PL3/8X13 1/2	1'-1 1/2"	19	AASHTO M 270 GR. 50	

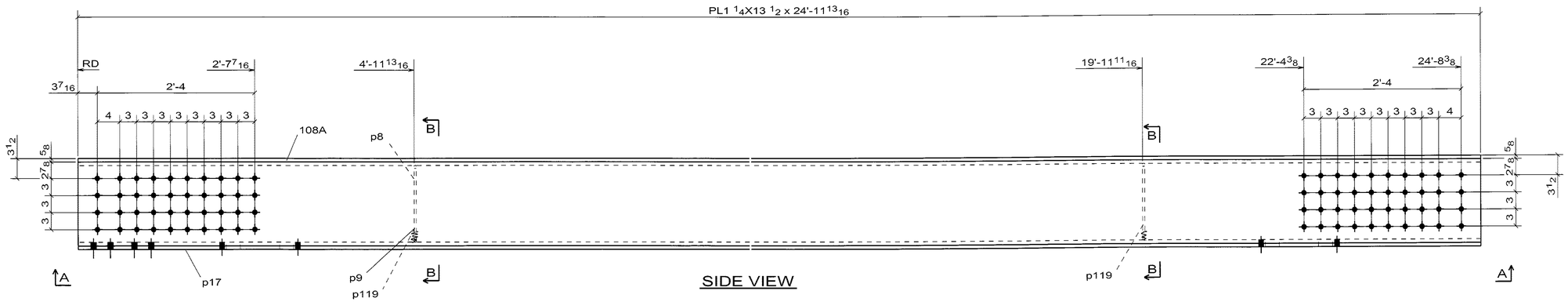

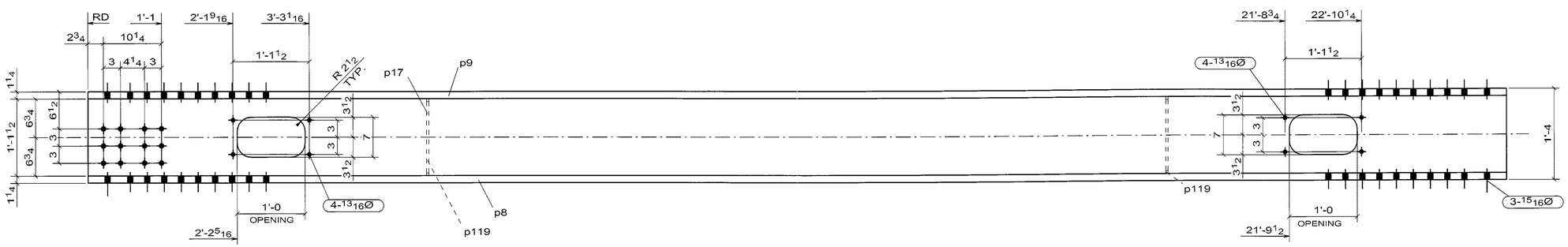

(BOTTOM VIEW)

A - A

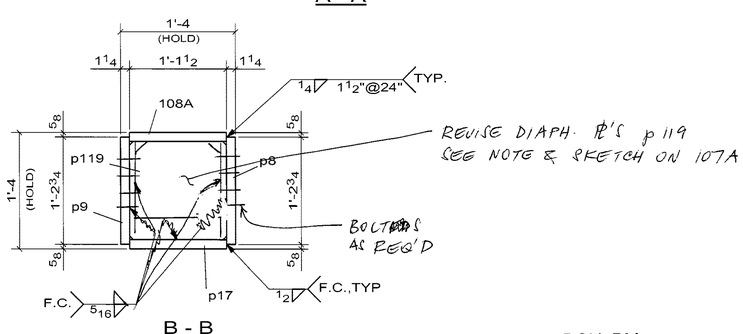

B - B

ADD CAMBER RE S33
OR SHOW THAT IT HAS BEEN
TAKEN INTO ACCOUNT

☐ CONFORMS TO DESIGN CONCEPT
☐ CONFORMS TO DESIGN CONCEPT WITH REVISIONS AS SHOWN
☒ NON-CONFORMING–REVISE & RESUBMIT

THIS SHOP DRAWING HAS BEEN REVIEWED FOR GENERAL CONFORMANCE WITH DESIGN CONCEPT ONLY AND DOES NOT RELIEVE THE FABRICATOR/VENDOR OF RESPONSIBILITY FOR CONFORMANCE WITH DESIGN DRAWINGS AND SPECIFICATIONS ALL OF WHICH HAVE PRIORITY OVER THIS SHOP DRAWING.

By A.F Date 10/13/06

I.IN & ASSOCIATES, INC.

1 - BOX_BM -108A

WELD NOTE FOR ANY ASSEMBLY REQUIRING TACK WELDS:
- ALL TACK WELDS ARE TO BE MADE IN THE WELD JOINT ONLY

CONTRACTOR NOTE:
THIS DRAWING IS BEING SUBMITTED FOR APPROVAL AS REQUIRED; VERIFY OR SUPPLY ALL QUANTITIES, ALL DIMENSIONS, ALL INFORMATION, & ALL CONFIGURATIONS.

PRINT RECORD

NO.	USE	DATE
	APPR.	
	APPR.	
	PURCH	
	FAB	
	FAB. OFFICE	
	Q.A.	
	DIST.	
	ERECT.	

OPEN HOLES 15/16 Ø U/N
WELD BRIDGE WELDING CODE: D1.5
STEEL AS NOTED
BOLTS
SURFACE PREP-SP
PAINT SEE SPECS
REF DRAWING E2

REV	DATE	DESCRIPTION
0	SEP/10/06	FOR APPROVAL

RAINIER WELDING

19020 NE 84TH STREET - REDMOND, WA 98053
(425) 868-1300 FAX (425) 868-8872
STEEL AND ALUMINUM FABRICATING

PROJECT: TOLT BRIDGE No 1834A
THIS DRAWING INCLUDES
FOR: SNOHOMISH COUNTY OFFICIAL
DRAWN: DJ CHK: DSC DWG NUMBER: 2707 - 108A
DATE: 07/31/2006 DATE: 09/10/2006

PRO DRAFT INC. PD# 676 PH:(604)589-6425
DRAWINGS PREPARED ON 3D-Xsteel File Name :- A [108.A]
Model Name: 725_102_TOLT_BRIDGE_541
Plot Date: 09/10/2006 12:12:26

No to SHIP	SHIP MARK	No PIECES	PIECE MARK	DESCRIPTION	LENGTH	UNIT WT.	GRADE	REMARKS
1	107A			BOX_BM		6001		
		1	107A	PL1 1/4X13 1/2	24'-11 13/16"	1438	AASHTO M 270 GR. 50	FCM/V
		1	p9	PL1 1/4X14 3/4	24'-11 13/16"	1571	AASHTO M 270 GR. 50	FCM/V
		1	p12	PL1 1/4X14 3/4	24'-11 13/16"	1571	AASHTO M 270 GR. 50	FCM/V
		1	p17	PL1 1/4X13 1/2	24'-11 13/16"	1382	AASHTO M 270 GR. 50	FCM/V
		2	p119	PL3/8X13 1/2	1'-1 1/2"	19	AASHTO M 270 GR. 50	

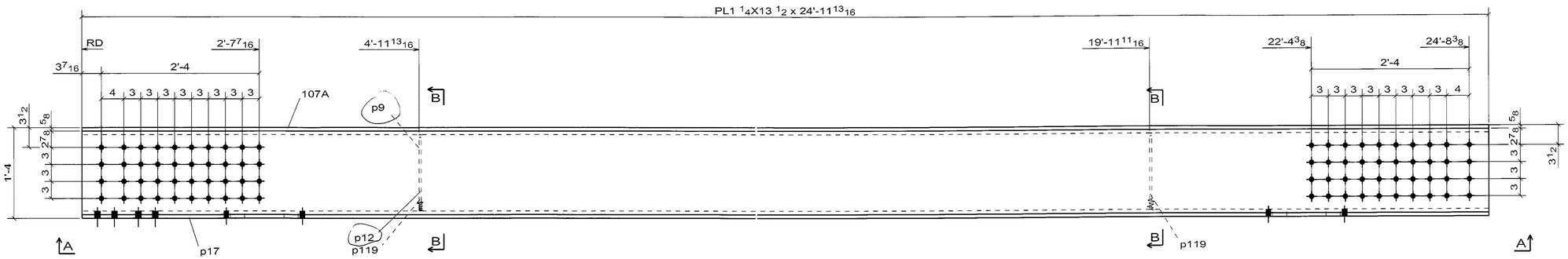

SIDE VIEW

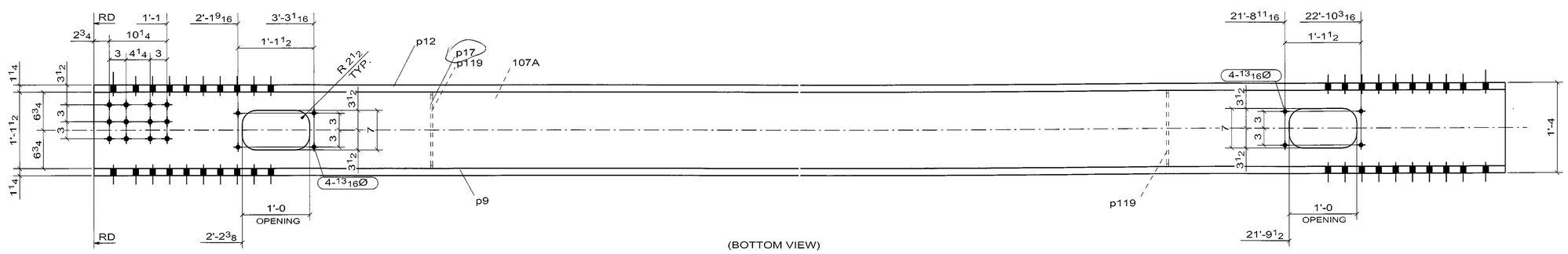

(BOTTOM VIEW)

A - A

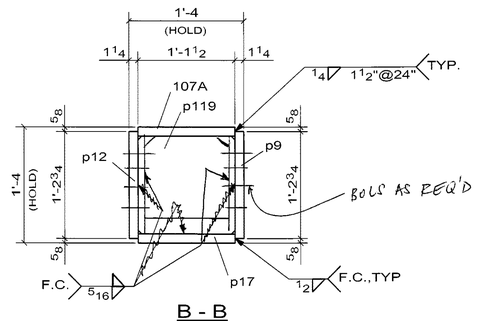

B - B

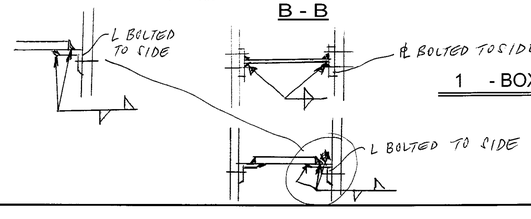

REVISE DIAPH p119 SHORTER, ATTACHED TO SIDES BY ANGLE OR PL BOLTED AS PER SKETCH
TRANSFERSE WELDS ON TENSION MEMBERS NOT ALLOWED

ADD CAMBER PER S33 OR SHOWN THAT IT HAS BEEN TAKEN INTO ACCOUNT

1 - BOX_BM -107A

WELD NOTE FOR ANY ASSEMBLY REQUIRING TACK WELDS:
- ALL TACK WELDS ARE TO BE MADE IN THE WELD JOINT ONLY

☐ CONFORMS TO DESIGN CONCEPT
☐ CONFORMS TO DESIGN CONCEPT WITH REVISIONS AS SHOWN
☒ NON-CONFORMING–REVISE & RESUBMIT
THIS SHOP DRAWING HAS BEEN REVIEWED FOR GENERAL CONFORMANCE WITH DESIGN CONCEPT ONLY AND DOES NOT RELIEVE THE FABRICATOR/VENDOR OF RESPONSIBILITY FOR CONFORMANCE WITH DESIGN DRAWINGS AND SPECIFICATIONS ALL OF WHICH HAVE PRIORITY OVER THIS SHOP DRAWING.
By A.F. Date 10/13/06
LIN & ASSOCIATES, INC.

CONTRACTOR NOTE:
THIS DRAWING IS BEING SUBMITTED FOR APPROVAL AS REQUIRED. VERIFY OR SUPPLY ALL QUANTITIES, ALL DIMENSIONS, ALL INFORMATION, & ALL CONFIGURATIONS.

PRINT RECORD

NO.	USE	DATE
	APPR.	
	APPR.	
	PURCH	
	FAB	
	FAB. OFFICE	
	Q.A.	
	DIST.	
	ERECT.	

OPEN HOLES 15/16 Ø U/N
WELD BRIDGE WELDING CODE: D1.5
STEEL AS NOTED
BOLTS
SURFACE PREP-SP
PAINT SEE SPECS
REF.DRAWING E2

REV	DATE	DESCRIPTION	VS.
0	SEP/10/06	FOR APPROVAL	

RAINIER WELDING
19020 NE 84TH STREET - REDMOND, WA 98053
(425) 868-1300 FAX (425) 868-8872
STEEL AND ALUMINUM FABRICATING

PROJECT TOLT BRIDGE No 1834A
THIS DRAWING INCLUDES
FOR SNOHOMISH COUNTY OFFICIAL
DRAWN DJ DATE 07/31/2006 CHK DSC DATE 09/10/2006 DWG NUMBER 2707 - 107A 0

PRO DRAFT INC. PD# 676 PH:(604)589-6425
DRAWINGS PREPARED ON 3D-Xsteel File Name :- A [107-A]
Model Name: 725_102_TOLT_BRIDGE_541
Plot Date: 09/10/2006 12:12:23

No to SHIP	SHIP MARK	No. PIECES	PIECE MARK	DESCRIPTION	LENGTH	UNIT WT	GRADE	REMARKS
1	106B			STRINGER		1783		
		1	106B	W24X68	24'-10 1/16"	1699	AASHTO M 270 GR. 50	
		1	p30	FB1/2X11	1'-3 1/8"	24	AASHTO M 270 GR. 50	
		2	p130	PL1/2X4 1/4	1'-2"	8	AASHTO M 270 GR. 50	
		2	p132	L8X8X1/2	0'-10"	22	AASHTO M 270 GR. 50	
		6	b1	7/8Ø A325 BOLT	2 3/4			

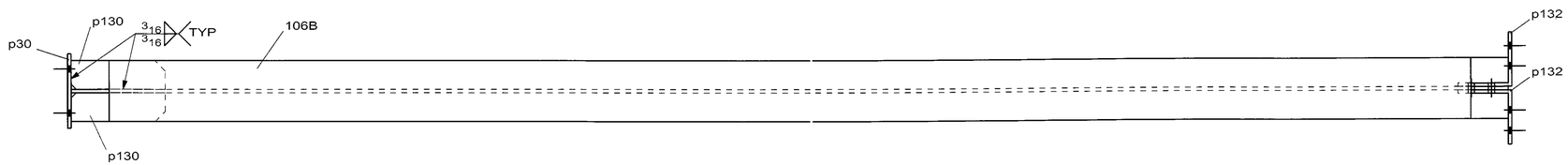

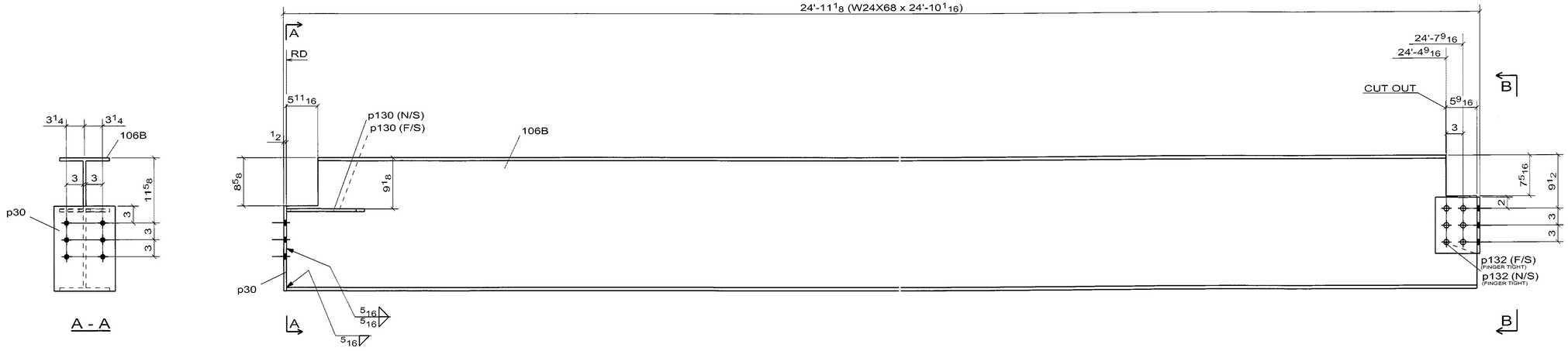

☒ CONFORMS TO DESIGN CONCEPT
☐ CONFORMS TO DESIGN CONCEPT WITH REVISIONS AS SHOWN
☐ NON-CONFORMING–REVISE & RESUBMIT

THIS SHOP DRAWING HAS BEEN REVIEWED FOR GENERAL CONFORMANCE WITH DESIGN CONCEPT ONLY AND DOES NOT RELIEVE THE FABRICATOR/VENDOR OF RESPONSIBILITY FOR CONFORMANCE WITH DESIGN DRAWINGS AND SPECIFICATIONS ALL OF WHICH HAVE PRIORITY OVER THIS SHOP DRAWING.

By A.F. Date 10/13/06

I.IN & ASSOCIATES, INC.

NOTE

- SEE 2SK FOR WELDED STUD LAYOUT

1 - STRINGER -106B

(SPAN 2)

WELD NOTE FOR ANY ASSEMBLY REQUIRING TACK WELDS:
- ALL TACK WELDS ARE TO BE MADE IN THE WELD JOINT ONLY

CONTRACTOR NOTE:
THIS DRAWING IS BEING SUBMITTED FOR APPROVAL AS REQUIRED. VERIFY OR SUPPLY ALL QUANTITIES, ALL DIMENSIONS, ALL INFORMATION, & ALL CONFIGURATIONS.

PRINT RECORD

NO.	USE	DATE
	APPR.	
	APPR.	
	PURCH	
	FAB	
	FAB. OFFICE	
	Q.A.	
	DIST.	
	ERECT.	

OPEN HOLES 15/16 Ø U/N
WELD BRIDGE WELDING CODE: D1.5
STEEL AS NOTED
BOLTS
SURFACE PREP-SP
PAINT SEE SPECS
REF DRAWING E3

REV	DATE	DESCRIPTION	VS.
0	SEP/10/06	FOR APPROVAL	

RAINIER WELDING

19020 NE 84TH STREET - REDMOND, WA 98053
(425) 868-1300 FAX (425) 868-8872
STEEL AND ALUMINUM FABRICATING

PROJECT: TOLT BRIDGE No 1834A
THIS DRAWING INCLUDES
FOR: SNOHOMISH COUNTY OFFICIAL
DRAWN: DJ DATE: 08/03/2006 CHK: DSC DATE: 09/10/2006 DWG NUMBER: 2707 - 106B 0

PRO DRAFT INC. PO# 676 PH:(604)589-5425
DRAWINGS PREPARED ON: 3D-Xsecl File Name - A [106.B]
Model Name: 725_102_TOLT_BRIDGE_541
Plot Date: 09/10/2006 12:16:37

No to SHIP	SHIP MARK	No PIECES	PIECE MARK	DESCRIPTION	LENGTH	UNIT WT.	GRADE	REMARKS
1	105B			STRINGER		1783		
		1	105B	W24X68	24'-10 1/16"	1699	AASHTO M 270 GR. 50	
		1	p28	FB1/2X11	1'-2 5/8"	23	AASHTO M 270 GR. 50	
		2	p130	PL1/2X4 1/4	1'-2"	8	AASHTO M 270 GR. 50	
		2	p132	L8X8X1/2	0'-10"	22	AASHTO M 270 GR. 50	
		6	b1	7/8Ø A325 BOLT	2 3/4			

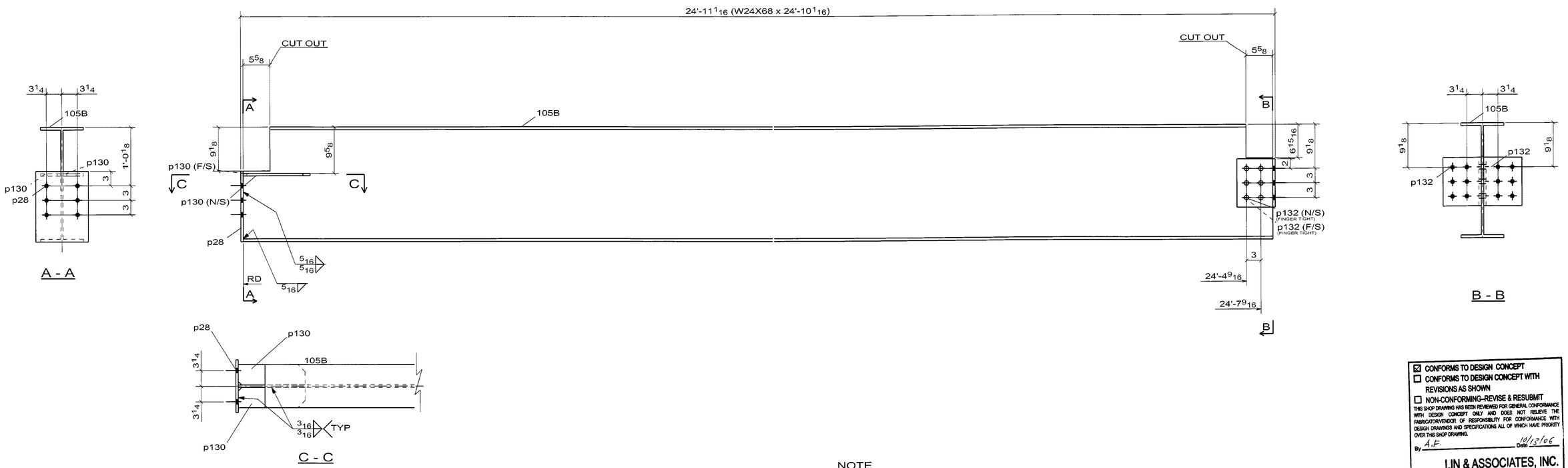

NOTE
- SEE 2SK FOR WELDED STUD LAYOUT

1 - STRINGER - 105B
(SPAN 2)

WELD NOTE FOR ANY ASSEMBLY REQUIRING TACK WELDS:
- ALL TACK WELDS ARE TO BE MADE IN THE WELD JOINT ONLY

☒ CONFORMS TO DESIGN CONCEPT
☐ CONFORMS TO DESIGN CONCEPT WITH REVISIONS AS SHOWN
☐ NON-CONFORMING–REVISE & RESUBMIT
THIS SHOP DRAWING HAS BEEN REVIEWED FOR GENERAL CONFORMANCE WITH DESIGN CONCEPT ONLY AND DOES NOT RELIEVE THE FABRICATOR/VENDOR OF RESPONSIBILITY FOR CONFORMANCE WITH DESIGN DRAWINGS AND SPECIFICATIONS ALL OF WHICH HAVE PRIORITY OVER THIS SHOP DRAWING.
By A.F. Date 10/13/06
I.IN & ASSOCIATES, INC.

CONTRACTOR NOTE:
THIS DRAWING IS BEING SUBMITTED FOR APPROVAL AS REQUIRED. VERIFY OR SUPPLY ALL QUANTITIES, ALL DIMENSIONS, ALL INFORMATION, & ALL CONFIGURATIONS.

PRINT RECORD

NO.	USE	DATE
	APPR.	
	APPR.	
	PURCH	
	FAB	
	FAB. OFFICE	
	Q.A.	
	DIST.	
	ERECT.	

OPEN HOLES 15/16 Ø U/N
WELD BRIDGE WELDING CODE: D1.5
STEEL AS NOTED
BOLTS
SURFACE PREP-SP
PAINT SEE SPECS
REF DRAWING E3

REV	DATE	DESCRIPTION	
0	SEP/10/06	FOR APPROVAL	VS

RAINIER WELDING
19020 NE 84TH STREET - REDMOND, WA 98053
(425) 868-1300 FAX (425) 868-8872
STEEL AND ALUMINUM FABRICATING

PROJECT TOLT BRIDGE No 1834A
THIS DRAWING INCLUDES
FOR SNOHOMISH COUNTY OFFICIAL
DRAWN DJ DATE 08/03/2006
CHK DSC DATE 09/10/2006
DWG NUMBER 2707 - 105B 0

PRO DRAFT INC. PO# 676 PH:(604)589-6425
DRAWINGS PREPARED ON 3D-Xsteel File Name :- A [105.B]
Model Name: 725_102_TOLT_BRIDGE_541
Plot Date: 09/10/2006 12:16:35

No to SHIP	SHIP MARK	No PIECES	PIECE MARK	DESCRIPTION	LENGTH	UNIT WT.	GRADE	REMARKS
1	105A			BOX_BM		4890		
		1	105A	PL1 X14	25'-0 11/16"	1193	AASHTO M 270 GR. 50	
		1	p2	PL1 X14 3/4	25'-0 11/16"	1255	AASHTO M 270 GR. 50	
		1	p3	PL1 X14	24'-11 15/16"	1146	AASHTO M 270 GR. 50	
		1	p4	PL1 X14 3/4	25'-0 11/16"	1255	AASHTO M 270 GR. 50	
		2	p120	PL3/8X14	1'-2"	21	AASHTO M 270 GR. 50	

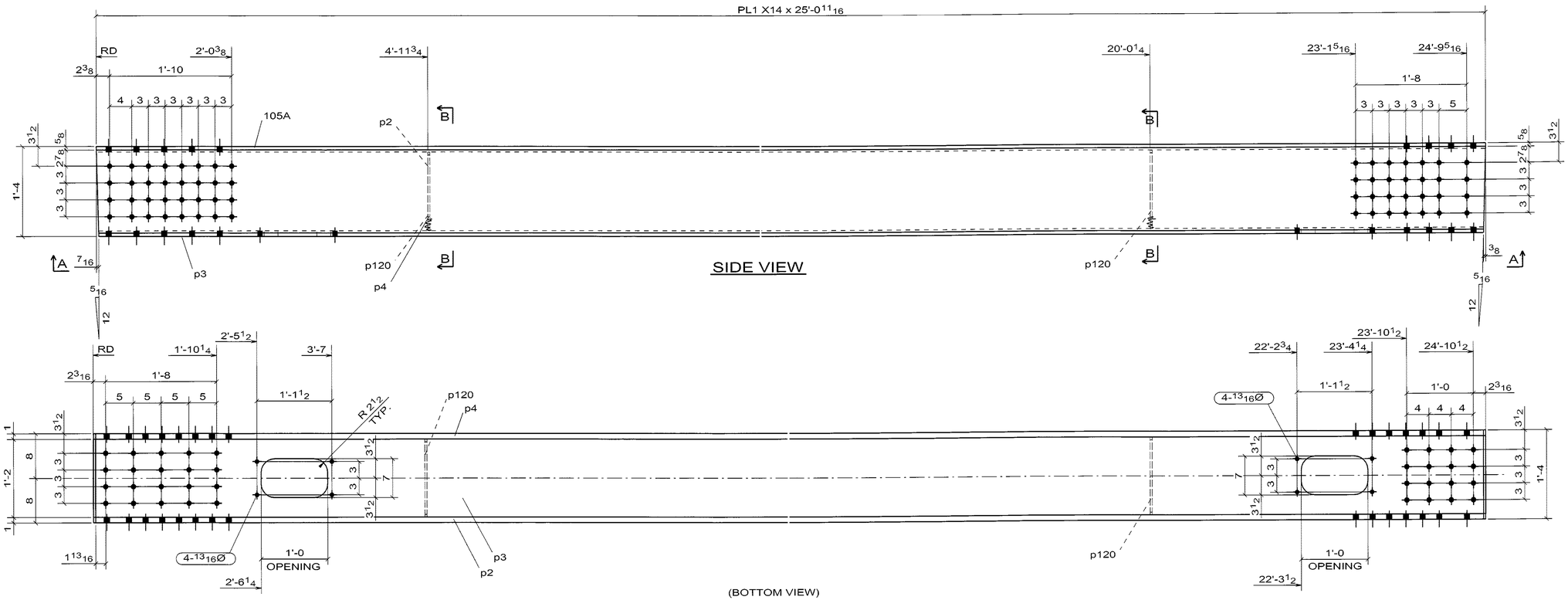

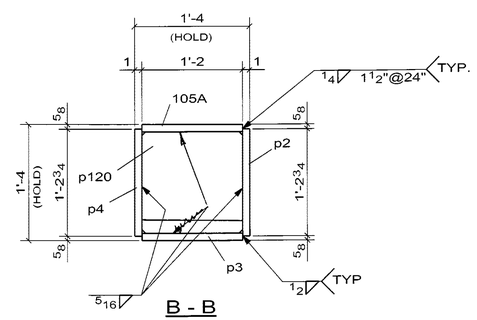

1 - BOX_BM -105A

WELD NOTE FOR ANY ASSEMBLY REQUIRING TACK WELDS:
- ALL TACK WELDS ARE TO BE MADE IN THE WELD JOINT ONLY

☐ CONFORMS TO DESIGN CONCEPT
☒ CONFORMS TO DESIGN CONCEPT WITH REVISIONS AS SHOWN
☐ NON-CONFORMING–REVISE & RESUBMIT

THIS SHOP DRAWING HAS BEEN REVIEWED FOR GENERAL CONFORMANCE WITH DESIGN CONCEPT ONLY AND DOES NOT RELIEVE THE FABRICATOR/VENDOR OF RESPONSIBILITY FOR CONFORMANCE WITH DESIGN DRAWINGS AND SPECIFICATIONS ALL OF WHICH HAVE PRIORITY OVER THIS SHOP DRAWING.

By A.F. Date 10/13/06

I.IN & ASSOCIATES, INC.

CONTRACTOR NOTE:
THIS DRAWING IS BEING SUBMITTED FOR APPROVAL AS REQUIRED. VERIFY OR SUPPLY ALL QUANTITIES, ALL DIMENSIONS, ALL INFORMATION, & ALL CONFIGURATIONS.

PRINT RECORD

NO.	USE	DATE
	APPR.	
	APPR.	
	PURCH	
	FAB	
	FAB. OFFICE	
	Q.A.	
	DIST.	
	ERECT.	

OPEN HOLES 15/16 Ø U/N
WELD BRIDGE WELDING CODE: D1.5
STEEL AS NOTED
BOLTS
SURFACE PREP-SP
PAINT SEE SPECS
REF DRAWING E4

REV	DATE	DESCRIPTION	
0	SEP/10/06	FOR APPROVAL	VS

RAINIER WELDING

19020 NE 84TH STREET - REDMOND, WA 98053
(425) 868-1300 FAX (425) 868-8872
STEEL AND ALUMINUM FABRICATING

PROJECT TOLT BRIDGE No 1834A
THIS DRAWING INCLUDES
FOR SNOHOMISH COUNTY OFFICIAL
DRAWN DJ DATE 07/31/2006
CHK DSC DATE 09/10/2006
DWG NUMBER 2707 - 105A
0

PRO DRAFT INC. PD# 676 PH:(604)589-6425
DRAWINGS PREPARED ON 3D-Xsteel File Name :- A [105.A]
Model Name: 725_102_TOLT_BRIDGE_541
Plot Date: 09/10/2006 12:12:19

No to SHIP	SHIP MARK	No PIECES	PIECE MARK	DESCRIPTION	LENGTH	UNIT WT.	GRADE	REMARKS
1	104B			STRINGER		1782		
		1	104B	W24X68	24'-10 1/16"	1699	AASHTO M 270 GR. 50	
		1	p26	FB1/2X11	1'-2 1/8"	22	AASHTO M 270 GR. 50	
		2	p130	PL1/2X4 1/4	1'-2"	8	AASHTO M 270 GR. 50	
		2	p132	L8X8X1/2	0'-10"	22	AASHTO M 270 GR. 50	
		6	b1	7/8Ø A325 BOLT	2 3/4			

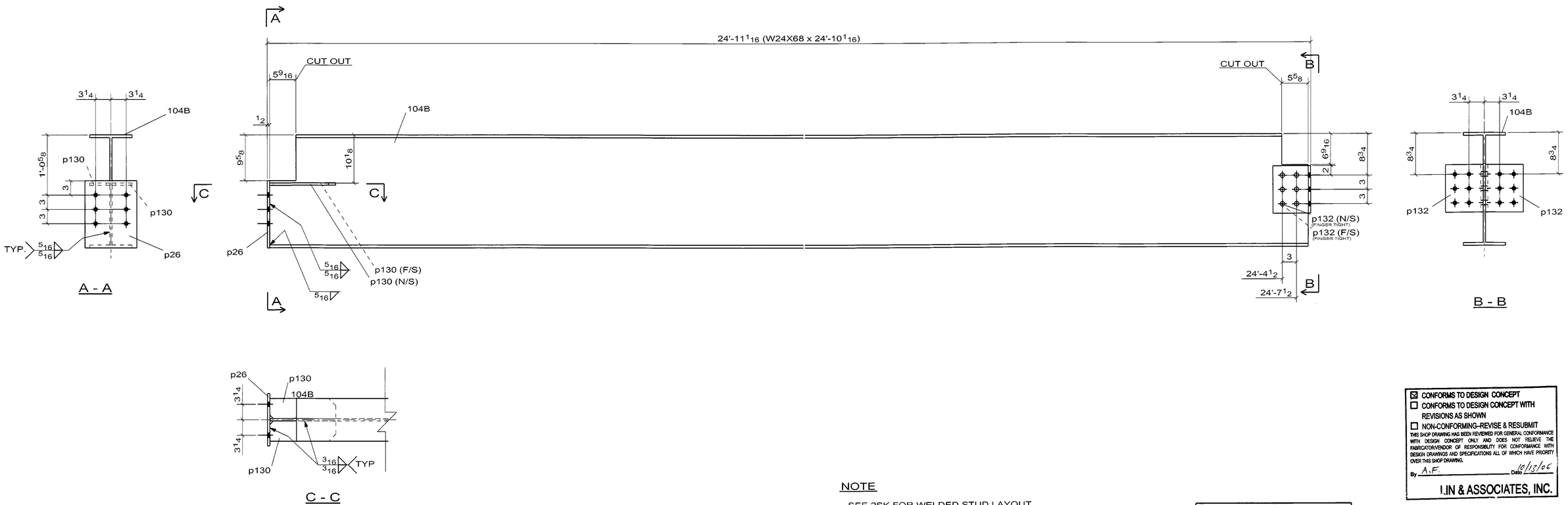

NOTE

- SEE 2SK FOR WELDED STUD LAYOUT

1 - STRINGER -104B

(SPAN 2)

WELD NOTE FOR ANY ASSEMBLY REQUIRING TACK WELDS:

- ALL TACK WELDS ARE TO BE MADE IN THE WELD JOINT ONLY

☒ CONFORMS TO DESIGN CONCEPT

☐ CONFORMS TO DESIGN CONCEPT WITH REVISIONS AS SHOWN

☐ NON-CONFORMING–REVISE & RESUBMIT

THIS SHOP DRAWING HAS BEEN REVIEWED FOR GENERAL CONFORMANCE WITH DESIGN CONCEPT ONLY AND DOES NOT RELIEVE THE FABRICATOR/VENDOR OF RESPONSIBILITY FOR CONFORMANCE WITH DESIGN DRAWINGS AND SPECIFICATIONS ALL OF WHICH HAVE PRIORITY OVER THIS SHOP DRAWING.

By A.F. Date 10/13/06

LIN & ASSOCIATES, INC.

CONTRACTOR NOTE:
THIS DRAWING IS BEING SUBMITTED FOR APPROVAL AS REQUIRED. VERIFY OR SUPPLY ALL QUANTITIES, ALL DIMENSIONS, ALL INFORMATION, & ALL CONFIGURATIONS.

PRINT RECORD

NO.	USE	DATE
	APPR.	
	APPR.	
	PURCH	
	FAB	
	FAB. OFFICE	
	Q.A.	
	DIST.	
	ERECT.	

OPEN HOLES 15/16 Ø U/N

WELD BRIDGE WELDING CODE: D1.5

STEEL AS NOTED

BOLTS

SURFACE PREP-SP

PAINT SEE SPECS

REF DRAWING E3

REV	DATE	DESCRIPTION	
0	SEP/10/06	FOR APPROVAL	VS

RAINIER WELDING

19020 NE 84TH STREET - REDMOND, WA 98053
(425) 868-1300 FAX (425) 868-8872
STEEL AND ALUMINUM FABRICATING

PROJECT TOLT BRIDGE No 1834A

THIS DRAWING INCLUDES

FOR SNOHOMISH COUNTY OFFICIAL

DRAWN DJ DATE 08/03/2006 | CHK DSC DATE 09/10/2006 | DWG NUMBER 2707 - 104B | 0

PRO DRAFT INC. PD# 676 PH:(604)589-5425
DRAWINGS PREPARED ON 3D-X.xlsxcl File Name :- A [104.B]
Model Name: 725_102_TOLT_BRIDGE_541
Plot Date: 09/10/2006 12:16:34

No to SHIP	SHIP MARK	No. PIECES	PIECE MARK	DESCRIPTION	LENGTH	UNIT WT	GRADE	REMARKS
3	104A			BOX_BM		4890		
		3	104A	PL1 X14	25'-0 11/16"	1193	AASHTO M 270 GR. 50	
		6	p2	PL1 X14 3/4	25'-0 11/16"	1255	AASHTO M 270 GR. 50	
		3	p3	PL1 X14	24'-11 15/16"	1146	AASHTO M 270 GR. 50	
		6	p120	PL3/8X14	1'-2"	21	AASHTO M 270 GR. 50	

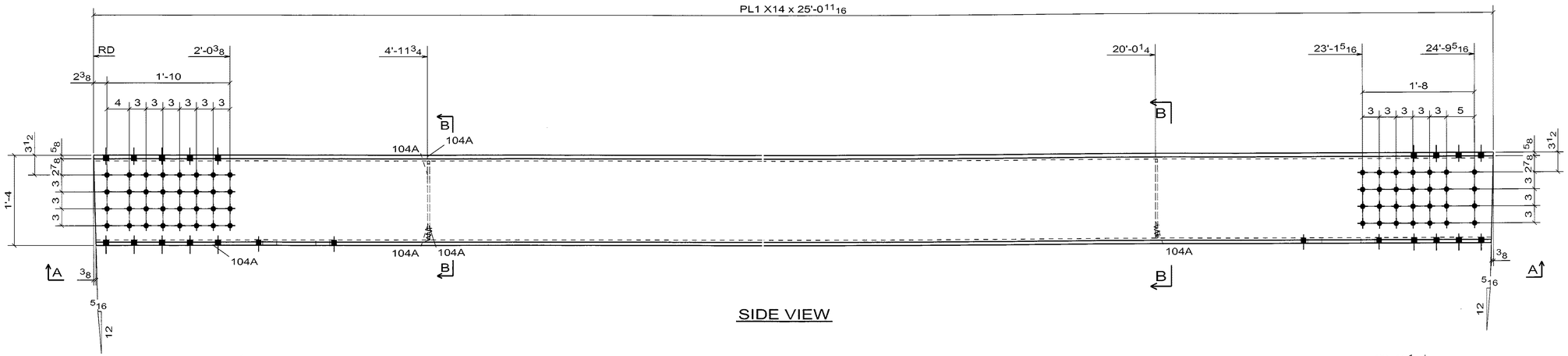

SIDE VIEW

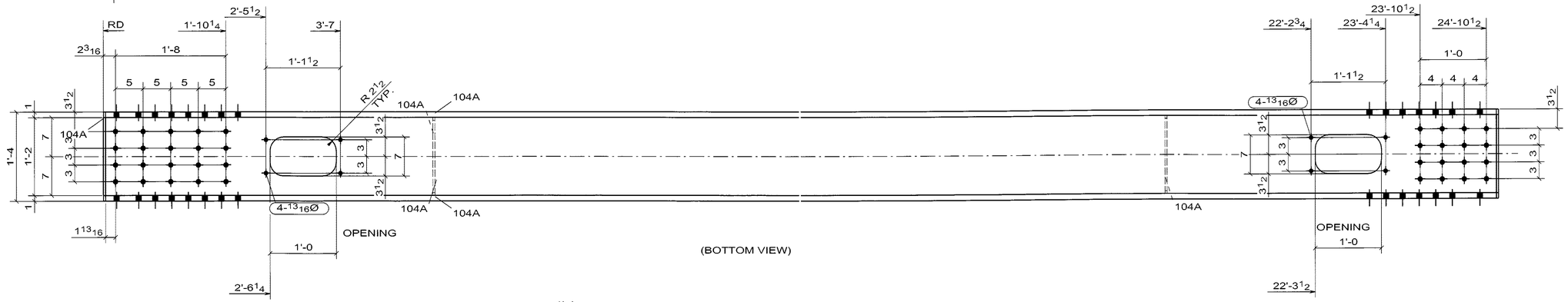

(BOTTOM VIEW)

A - A

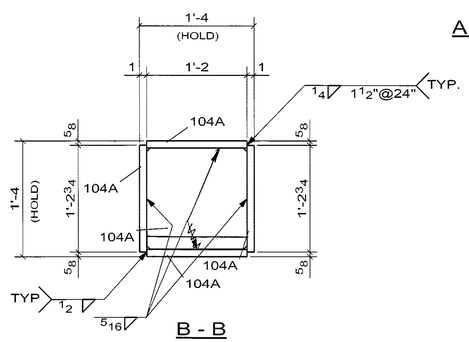

B - B

3 - BOX_BM -104A

WELD NOTE FOR ANY ASSEMBLY REQUIRING TACK WELDS:
- ALL TACK WELDS ARE TO BE MADE IN THE WELD JOINT IN ONLY

CONTRACTOR NOTE:
THIS DRAWING IS BEING SUBMITTED FOR APPROVAL AS REQUIRED. VERIFY OR SUPPLY ALL QUANTITIES, ALL DIMENSIONS, ALL INFORMATION, & ALL CONFIGURATIONS.

PRINT RECORD			
NO.	USE	DATE	
	APPR.		
	APPR.		
	PURCH		
	FAB		
	FAB. OFFICE		
	Q.A.		
	DIST.		
	ERECT.		

OPEN HOLES: 15/16 Ø U/N
WELD: BRIDGE WELDING CODE: D1.5
STEEL: AS NOTED
BOLTS:
SURFACE PREP-SP:
PAINT: SEE SPECS
REF DRAWING: E4, E5

ONFORMS TO DESIGN CONCEPT
☒ CONFORMS TO DESIGN CONCEPT WITH REVISIONS AS SHOWN
☐ NON-CONFORMING–REVISE & RESUBMIT
THIS SHOP DRAWING HAS BEEN REVIEWED FOR GENERAL CONFORMANCE WITH DESIGN CONCEPT ONLY AND DOES NOT RELIEVE THE FABRICATOR/VENDOR OF RESPONSIBILITY FOR CONFORMANCE WITH DESIGN DRAWINGS AND SPECIFICATIONS ALL OF WHICH HAVE PRIORITY OVER THIS SHOP DRAWING.
By A.F. Date 10/13/06
I.IN & ASSOCIATES, INC.

REV	DATE	DESCRIPTION	VS
0	SEP/10/06	FOR APPROVAL	

RAINIER WELDING
19020 NE 84TH STREET - REDMOND, WA 98053
(425) 868-1300 FAX (425) 868-8872
STEEL AND ALUMINUM FABRICATING

PROJECT: TOLT BRIDGE No 1834A
THIS DRAWING INCLUDES:
FOR: SNOHOMISH COUNTY OFFICIAL
DRAWN: DJ DATE: 07/31/2006
CHK: DSC DATE: 09/10/2006
DWG NUMBER: 2707 - 104A

PRO DRAFT INC. PD# 676 PH:(904)689-6425
DRAWINGS PREPARED ON 3D-Xsteel File Name :- A [104 A]
Model Name: 725_102_TOLT_BRIDGE_541
Plot Date: 09/10/2006 12:12:15

No to SHIP	SHIP MARK	No PIECES	PIECE MARK	DESCRIPTION	LENGTH	UNIT WT.	GRADE	REMARKS
1	103B			STRINGER		1787		
		1	103B	W24X68	24'-10"	1699	AASHTO M 270 GR. 50	
		4	p132	L8X8X1/2	0'-10"	22	AASHTO M 270 GR. 50	
		12	b1	7/8Ø A325 BOLT	2 3/4			

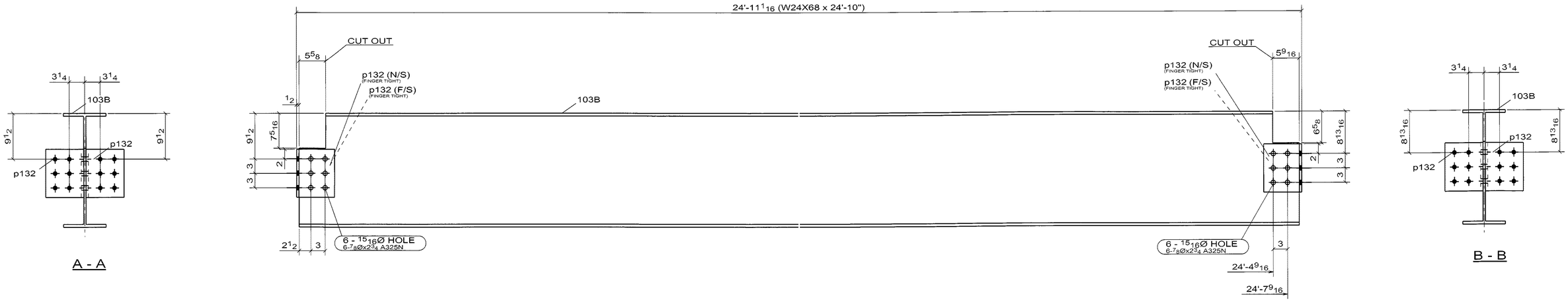

NOTE

- SEE 2SK FOR WELDED STUD LAYOUT

1 - STRINGER -103B

(SPAN 2)

WELD NOTE FOR ANY ASSEMBLY REQUIRING TACK WELDS:
- ALL TACK WELDS ARE TO BE MADE IN THE WELD JOINT ONLY

☒ CONFORMS TO DESIGN CONCEPT
☐ CONFORMS TO DESIGN CONCEPT WITH REVISIONS AS SHOWN
☐ NON-CONFORMING–REVISE & RESUBMIT

THIS SHOP DRAWING HAS BEEN REVIEWED FOR GENERAL CONFORMANCE WITH DESIGN CONCEPT ONLY AND DOES NOT RELIEVE THE FABRICATOR/VENDOR OF RESPONSIBILITY FOR CONFORMANCE WITH DESIGN DRAWINGS AND SPECIFICATIONS ALL OF WHICH HAVE PRIORITY OVER THIS SHOP DRAWING.

By A.F. Date 10/13/06

I.IN & ASSOCIATES, INC.

CONTRACTOR NOTE:
THIS DRAWING IS BEING SUBMITTED FOR APPROVAL AS REQUIRED. VERIFY OR SUPPLY ALL QUANTITIES, ALL DIMENSIONS, ALL INFORMATION, & ALL CONFIGURATIONS.

PRINT RECORD

NO.	USE	DATE
	APPR.	
	APPR.	
	PURCH	
	FAB	
	FAB. OFFICE	
	Q.A.	
	DIST.	
	ERECT.	

OPEN HOLES 15/16 Ø U/N
WELD BRIDGE WELDING CODE: D1.5
STEEL AS NOTED
BOLTS
SURFACE PREP SP
PAINT SEE SPECS
REF.DRAWING E3

REV	DATE	DESCRIPTION	VS.
0	SEP/10/06	FOR APPROVAL	

RAINIER WELDING

19020 NE 84TH STREET - REDMOND, WA 98053
(425) 868-1300 FAX (425) 868-8872
STEEL AND ALUMINUM FABRICATING

PROJECT TOLT BRIDGE No 1834A
THIS DRAWING INCLUDES
FOR SNOHOMISH COUNTY OFFICIAL
DRAWN DJ DATE 08/03/2006 CHK DSC DATE 09/10/2006 DWG NUMBER 2707 - 103B 0

PRO DRAFT INC. PC# 676 PH:(800)586-6425
DRAWINGS PREPARED ON 3D-Xsteel File Name : A [103.B]
Model Name: 725_102_TOLT_BRIDGE_541
Plot Date: 09/10/2006 12:16:33