No to SHIP	SHIP MARK	No PIECES	PIECE MARK	DESCRIPTION	LENGTH	UNIT WT.	GRADE	REMARKS
1	180A			BOX_BM		6383		
		1	180A	PL7/8X14 1/4	37'-3 3/4"	1580	AASHTO M 270 GR. 50	
		1	p39	PL7/8X14 3/4	37'-3 9/16"	1626	AASHTO M 270 GR. 50	
		1	p40	PL7/8X14 3/4	37'-3 9/16"	1587	AASHTO M 270 GR. 50	
		1	p41	PL7/8X14 1/4	36'-10 5/8"	1504	AASHTO M 270 GR. 50	
		4	p117	PL3/8X14 1/4	1'-2 1/4"	22	AASHTO M 270 GR. 50	

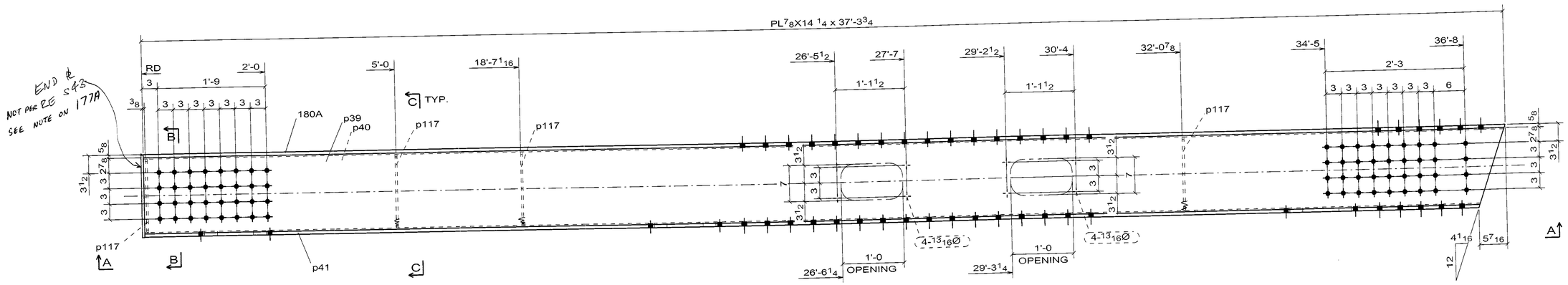

SIDE VIEW

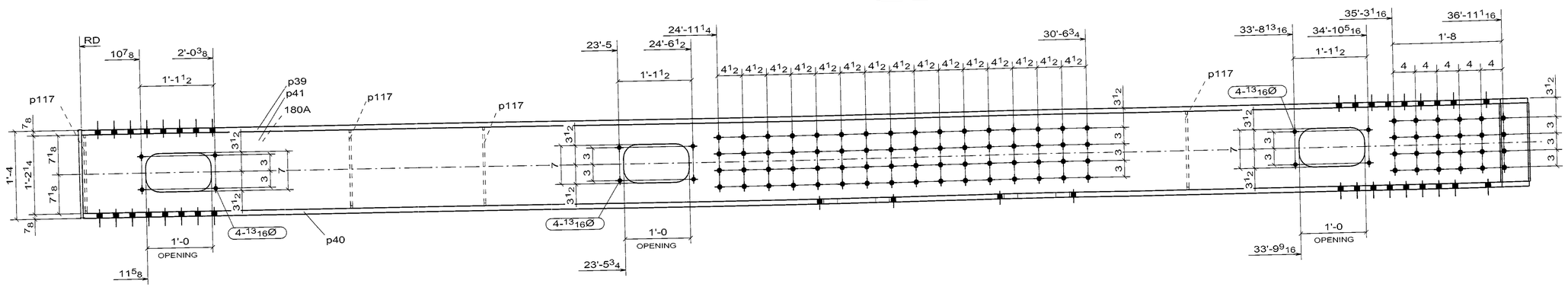

A - A

(BOTTOM VIEW)

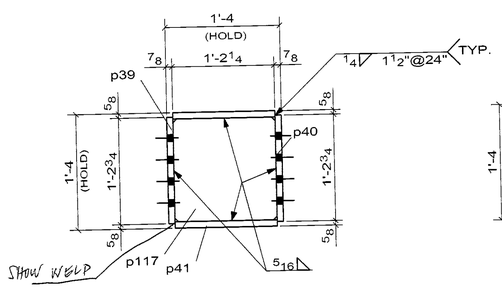

B - B

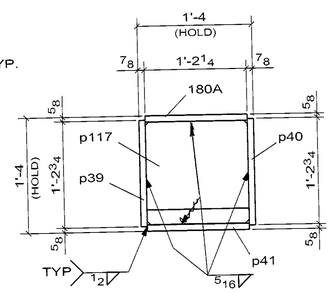

C - C

1 - BOX_BM -180A

WELD NOTE FOR ANY ASSEMBLY REQUIRING TACK WELDS:
- ALL TACK WELDS ARE TO BE MADE IN THE WELD JOINT ONLY

☐ CONFORMS TO DESIGN CONCEPT
☒ CONFORMS TO DESIGN CONCEPT WITH REVISIONS AS SHOWN
☐ NON-CONFORMING–REVISE & RESUBMIT

THIS SHOP DRAWING HAS BEEN REVIEWED FOR GENERAL CONFORMANCE WITH DESIGN CONCEPT ONLY AND DOES NOT RELIEVE THE FABRICATOR/VENDOR OF RESPONSIBILITY FOR CONFORMANCE WITH DESIGN DRAWINGS AND SPECIFICATIONS ALL OF WHICH HAVE PRIORITY OVER THIS SHOP DRAWING.

By A.F. Date 10/13/06

I.IN & ASSOCIATES, INC.

CONTRACTOR NOTE:
THIS DRAWING IS BEING SUBMITTED FOR APPROVAL AS REQUIRED. VERIFY OR SUPPLY ALL QUANTITIES, ALL DIMENSIONS, ALL INFORMATION, & ALL CONFIGURATIONS.

PRINT RECORD

NO.	USE	DATE
	APPR.	
	APPR.	
	PURCH	
	FAB	
	FAB. OFFICE	
	Q.A.	
	DIST.	
	ERECT.	

OPEN HOLES: 15/16 Ø U/N
WELD: BRIDGE WELDING CODE: D1.5
STEEL: AS NOTED
BOLTS:
SURFACE PREP SP:
PAINT: SEE SPECS
REF DRAWING: E6

REV	DATE	DESCRIPTION	VS
0	SEP/10/06	FOR APPROVAL	

RAINIER WELDING

19020 NE 84TH STREET - REDMOND, WA 98053
(425) 868-1300 FAX (425) 868-8872
STEEL AND ALUMINUM FABRICATING

PROJECT: TOLT BRIDGE No 1834A
THIS DRAWING INCLUDES:
FOR: SNOHOMISH COUNTY OFFICIAL
DRAWN: DJ DATE: 07/31/2006
CHK: DSC DATE: 09/10/2006
DWG NUMBER: 2707 - 180A 0

PRO DRAFT INC. PD# 676 PH:(604)689-6425
DRAWINGS PREPARED ON 3D-Xsteel File Name :- A [180.A]
Model Name: 725_102_TOLT_BRIDGE_641
Plot Date: 09/10/2006 12:13:13

No to SHIP	SHIP MARK	No. PIECES	PIECE MARK	DESCRIPTION	LENGTH	UNIT WT.	GRADE	REMARKS
8	222A			H_BRACE		1752		
		8	222A	HSS16X8X3/8	31'-8 15/16"	1729	A500-GR.C	
		16	p113	PL3/8X7 1/8	1'-3 3/16"	12	AASHTO M 270 GR. 50	

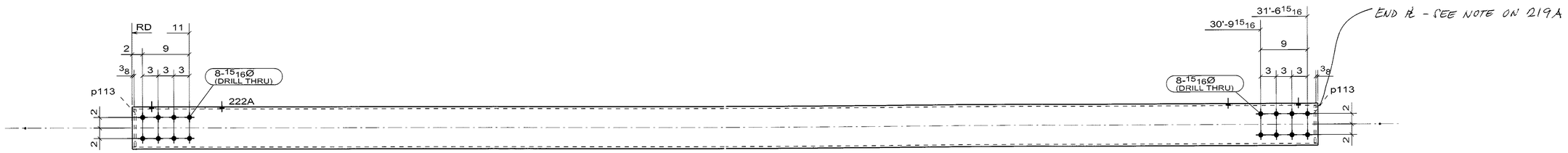

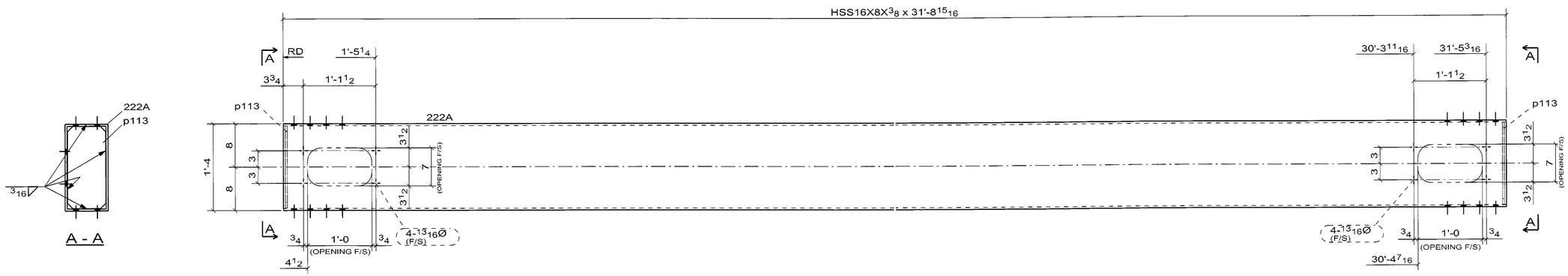

☐ CONFORMS TO DESIGN CONCEPT
☒ CONFORMS TO DESIGN CONCEPT WITH REVISIONS AS SHOWN
☐ NON-CONFORMING–REVISE & RESUBMIT

THIS SHOP DRAWING HAS BEEN REVIEWED FOR GENERAL CONFORMANCE WITH DESIGN CONCEPT ONLY AND DOES NOT RELIEVE THE FABRICATOR/VENDOR OF RESPONSIBILITY FOR CONFORMANCE WITH DESIGN DRAWINGS AND SPECIFICATIONS ALL OF WHICH HAVE PRIORITY OVER THIS SHOP DRAWING.

By A.F. Date 10/12/06

LIN & ASSOCIATES, INC.

8 - H_BRACE -222A

WELD NOTE FOR ANY ASSEMBLY REQUIRING TACK WELDS:
- ALL TACK WELDS ARE TO BE MADE IN THE WELD JOINT ONLY

CONTRACTOR NOTE:
THIS DRAWING IS BEING SUBMITTED FOR APPROVAL AS REQUIRED. VERIFY OR SUPPLY ALL QUANTITIES, ALL DIMENSIONS, ALL INFORMATION, & ALL CONFIGURATIONS

PRINT RECORD

NO.	USE	DATE
	APPR.	
	APPR.	
	PURCH	
	FAB	
	FAB. OFFICE	
	Q.A.	
	DIST.	
	ERECT.	

OPEN HOLES: 15/16 Ø U/N
WELD: BRIDGE WELDING CODE: D1.5
STEEL: AS NOTED
BOLTS:
SURFACE PREP-SP
PAINT: SEE SPECS
REF DRAWING: E4, E5

REV	DATE	DESCRIPTION	
0	SEP/10/06	FOR APPROVAL	VS

RAINIER WELDING

19020 NE 84TH STREET - REDMOND, WA 98053
(425) 868-1300 FAX (425) 868-8872
STEEL AND ALUMINUM FABRICATING

PROJECT: TOLT BRIDGE No 1834A
THIS DRAWING INCLUDES:
FOR: SNOHOMISH COUNTY OFFICIAL

DRAWN	CHK	DWG NUMBER
DJ	DSC	2707 - 222A
DATE 07/31/2006	DATE 09/10/2006	

PRO DRAFT INC. PO# 676 PH:(604)589-8425
DRAWINGS PREPARED ON 3D-Xpert File Name > A [222.A]
Model Name: 725_102_TOLT_BRIDGE_541
Plot Date: 09/10/2006 12:17:14

No to SHIP	SHIP MARK	No PIECES	PIECE MARK	DESCRIPTION	LENGTH	UNIT WT.	GRADE	REMARKS
4	221A			H_BRACE		1714		
		4	221A	HSS16X8X3/8	31'-0 9/16"	1691	A500-GR C	
		8	p113	PL3/8X7 1/8	1'-3 3/16"	12	AASHTO M 270 GR. 50	

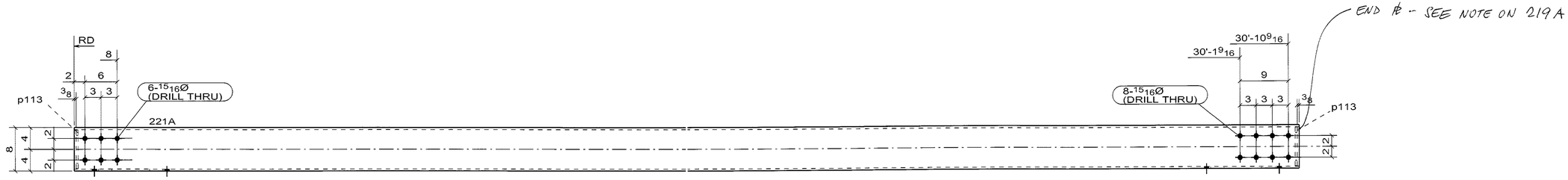

☐ CONFORMS TO DESIGN CONCEPT
☒ CONFORMS TO DESIGN CONCEPT WITH REVISIONS AS SHOWN
☐ NON-CONFORMING–REVISE & RESUBMIT

THIS SHOP DRAWING HAS BEEN REVIEWED FOR GENERAL CONFORMANCE WITH DESIGN CONCEPT ONLY AND DOES NOT RELIEVE THE FABRICATOR/VENDOR OF RESPONSIBILITY FOR CONFORMANCE WITH DESIGN DRAWINGS AND SPECIFICATIONS ALL OF WHICH HAVE PRIORITY OVER THIS SHOP DRAWING.

By A.F. Date 10/13/06

LIN & ASSOCIATES, INC.

4 - H_BRACE -221A

WELD NOTE FOR ANY ASSEMBLY REQUIRING TACK WELDS:
- ALL TACK WELDS ARE TO BE MADE IN THE WELD JOINT ONLY

CONTRACTOR NOTE:
THIS DRAWING IS BEING SUBMITTED FOR APPROVAL AS REQUIRED. VERIFY OR SUPPLY ALL QUANTITIES, ALL DIMENSIONS, ALL INFORMATION, & ALL CONFIGURATIONS.

PRINT RECORD			OPEN HOLES 15/16 Ø U/N
NO.	USE	DATE	WELD BRIDGE WELDING CODE: D1.5
	APPR.		STEEL AS NOTED
	APPR.		BOLTS
	PURCH		SURFACE PREP-SP
	FAB		PAINT SEE SPECS
	FAB. OFFICE		REF.DRAWING E4, E5
	Q.A.		
	DIST.		
	ERECT.		

REV	DATE	DESCRIPTION	VS
0	SEP/10/06	FOR APPROVAL	

RAINIER WELDING

19020 NE 84TH STREET - REDMOND, WA 98053
(425) 868-1300 FAX (425) 868-8872
STEEL AND ALUMINUM FABRICATING

PROJECT: TOLT BRIDGE No 1834A
THIS DRAWING INCLUDES
FOR: SNOHOMISH COUNTY OFFICIAL
DRAWN: DJ DATE: 07/31/2006
CHK: DSC DATE: 09/10/2006
DWG NUMBER: 2707 - 221A

PRO DRAFT INC. PD# 676 PH:(504)589-5425
DRAWINGS PREPARED ON: 3D-Xsecl File Name :- A [221.A]
Model Name: 725_102_TOLT_BRIDGE_541
Plot Date: 09/10/2006 12:17:12

No to SHIP	SHIP MARK	No PIECES	PIECE MARK	DESCRIPTION	LENGTH	UNIT WT.	GRADE	REMARKS
4	220A			H_BRACE		1729		
		4	220A	HSS16X8X3/8	31'-3 7/8"	1706	A500-GR C	
		8	p113	PL3/8X7 1/8	1'-3 3/16"	12	AASHTO M 270 GR. 50	

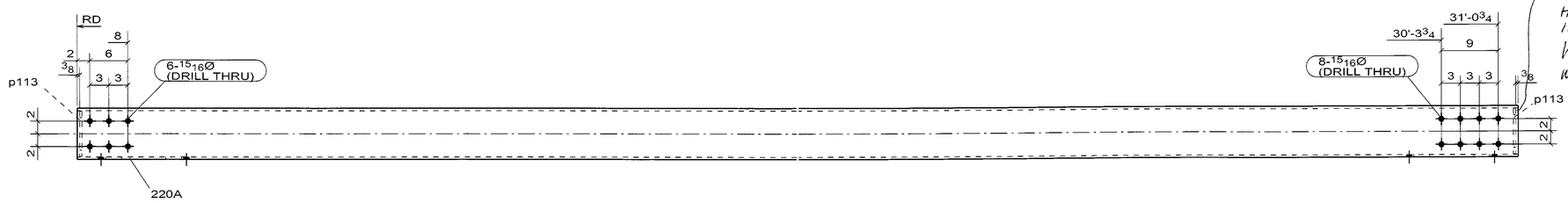

END PL NOT ON END OF MEMBER AS SHOWN ON SHEET S43; HOWEVER DETAILED END PL IS ALSO ACCEPTABLE
VERIFY NO CONFLICT WITH ERECTION

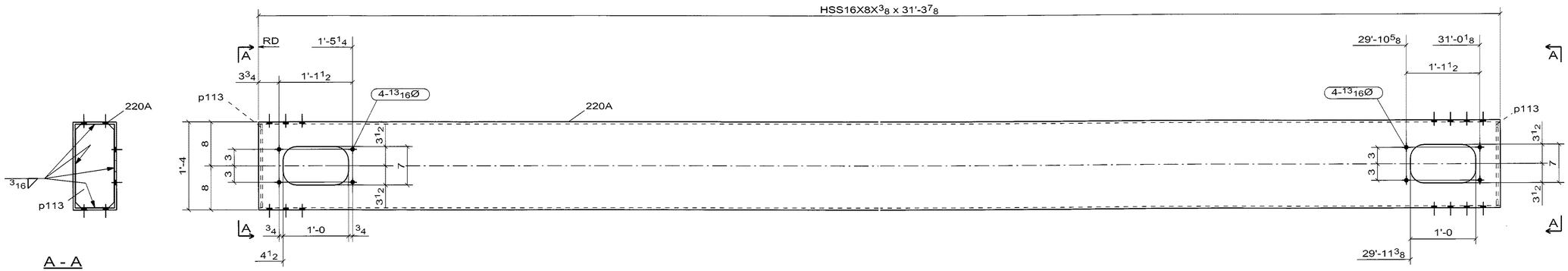

A - A

☐ CONFORMS TO DESIGN CONCEPT
☒ CONFORMS TO DESIGN CONCEPT WITH REVISIONS AS SHOWN
☐ NON-CONFORMING–REVISE & RESUBMIT

THIS SHOP DRAWING HAS BEEN REVIEWED FOR GENERAL CONFORMANCE WITH DESIGN CONCEPT ONLY AND DOES NOT RELIEVE THE FABRICATOR/VENDOR OF RESPONSIBILITY FOR CONFORMANCE WITH DESIGN DRAWINGS AND SPECIFICATIONS ALL OF WHICH HAVE PRIORITY OVER THIS SHOP DRAWING.

By A.F. Date 10/13/06

I.IN & ASSOCIATES, INC.

4 - H_BRACE -220A

WELD NOTE FOR ANY ASSEMBLY REQUIRING TACK WELDS:
- ALL TACK WELDS ARE TO BE MADE IN THE WELD JOINT ONLY

CONTRACTOR NOTE:
THIS DRAWING IS BEING SUBMITTED FOR APPROVAL AS REQUIRED. VERIFY OR SUPPLY ALL QUANTITIES, ALL DIMENSIONS, ALL INFORMATION, & ALL CONFIGURATIONS.

PRINT RECORD

NO.	USE	DATE
	APPR.	
	APPR.	
	PURCH	
	FAB	
	FAB. OFFICE	
	Q.A.	
	DIST.	
	ERECT.	

OPEN HOLES: 15/16 Ø U/N
WELD: BRIDGE WELDING CODE: D1.5
STEEL: AS NOTED
BOLTS:
SURFACE PREP-SP
PAINT: SEE SPECS
REF DRAWING: E4, E5

REV	DATE	DESCRIPTION	VS
0	SEP/10/06	FOR APPROVAL	

RAINIER WELDING

19020 NE 84TH STREET - REDMOND, WA 98053
(425) 868-1300 FAX (425) 868-8872
STEEL AND ALUMINUM FABRICATING

PROJECT: TOLT BRIDGE No 1834A
THIS DRAWING INCLUDES
FOR: SNOHOMISH COUNTY OFFICIAL
DRAWN: DJ DATE: 07/31/2006
CHK: DSC DATE: 09/10/2006
DWG NUMBER: 2707 - 220A
0

PRO DRAFT INC. PO# 676 PH:(604)589-6425
DRAWINGS PREPARED ON 3D-Xsteel File Name :- A [220 A]
Model Name: 725_102_TOLT_BRIDGE_S41
Plot Date: 09/10/2006 12:17:11

No to SHIP	SHIP MARK	No PIECES	PIECE MARK	DESCRIPTION	LENGTH	UNIT WT.	GRADE	REMARKS
4	219A			H_BRACE		1734		
		4	219A	HSS16X8X3/8	31'-5 1/16"	1711	A500-GR.C	
		8	p113	PL3/8X7 1/8	1'-3 3/16"	12	AASHTO M 270 GR. 50	

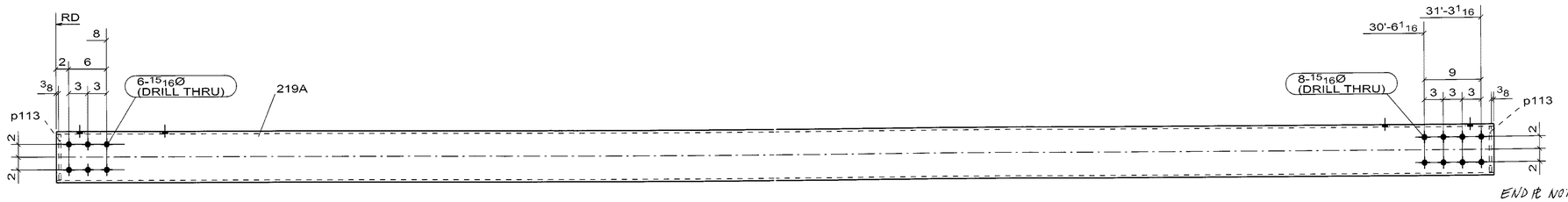

END PL NOT ON END MEMBER AS SHOWN ON SHEET S43; HOWEVER DETAILED END PL IS ALSO ACCEPTABLE

VERIFY NO CONFLICT WITH ERECTION

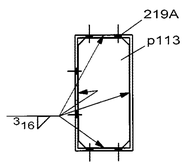

A - A

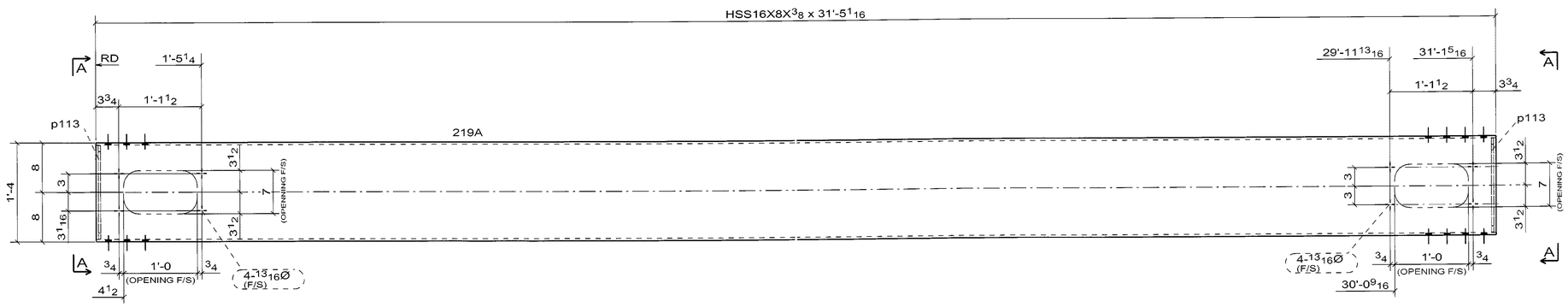

☐ CONFORMS TO DESIGN CONCEPT
☒ CONFORMS TO DESIGN CONCEPT WITH REVISIONS AS SHOWN
☐ NON-CONFORMING–REVISE & RESUBMIT

THIS SHOP DRAWING HAS BEEN REVIEWED FOR GENERAL CONFORMANCE WITH DESIGN CONCEPT ONLY AND DOES NOT RELIEVE THE FABRICATOR/VENDOR OF RESPONSIBILITY FOR CONFORMANCE WITH DESIGN DRAWINGS AND SPECIFICATIONS ALL OF WHICH HAVE PRIORITY OVER THIS SHOP DRAWING.

By A.E. Date 10/13/06

I.IN & ASSOCIATES, INC.

4 - H_BRACE -219A

WELD NOTE FOR ANY ASSEMBLY REQUIRING TACK WELDS:
- ALL TACK WELDS ARE TO BE MADE IN THE WELD JOINT ONLY

CONTRACTOR NOTE:
THIS DRAWING IS BEING SUBMITTED FOR APPROVAL AS REQUIRED. VERIFY OR SUPPLY ALL QUANTITIES, ALL DIMENSIONS, ALL INFORMATION, & ALL CONFIGURATIONS.

PRINT RECORD

NO.	USE	DATE
	APPR.	
	APPR.	
	PURCH	
	FAB	
	FAB. OFFICE	
	Q.A.	
	DIST.	
	ERECT.	

OPEN HOLES: 15/16 Ø U/N
WELD: BRIDGE WELDING CODE: D1.5
STEEL: AS NOTED
BOLTS:
SURFACE PREP-SP:
PAINT: SEE SPECS
REF.DRAWING: E4, E5

REV	DATE	DESCRIPTION	VS
0	SEP/10/06	FOR APPROVAL	

RAINIER WELDING

19020 NE 84TH STREET - REDMOND, WA 98053
(425) 868-1300 FAX (425) 868-8872
STEEL AND ALUMINUM FABRICATING

PROJECT: TOLT BRIDGE No 1834A
THIS DRAWING INCLUDES:
FOR: SNOHOMISH COUNTY OFFICIAL

DRAWN	CHK	DWG NUMBER
DJ	DSC	2707 - 219A
DATE 07/31/2006	DATE 09/10/2006	

PRO DRAFT INC. PD# 676 PH:(604)589-6425
DRAWINGS PREPARED ON 3D-Xdocl File Name : A (219.A)
Model Name: 725_102_TOLT_BRIDGE_541
Plot Date: 09/10/2006 12:17:10

No to SHIP	SHIP MARK	No PIECES	PIECE MARK	DESCRIPTION	LENGTH	UNIT WT.	GRADE	REMARKS
4	190A			BOX_BM		3794		
		4	190A	PL3/4X14 1/2	25'-5 7/16"	939	AASHTO M 270 GR. 50	
		8	p51	PL3/4X14 3/4	25'-5 3/8"	954	AASHTO M 270 GR. 50	
		4	p52	PL3/4X14 1/2	25'-4 5/8"	903	AASHTO M 270 GR. 50	
		8	p116	PL3/8X14 1/2	1'-2 1/2"	22	AASHTO M 270 GR. 50	

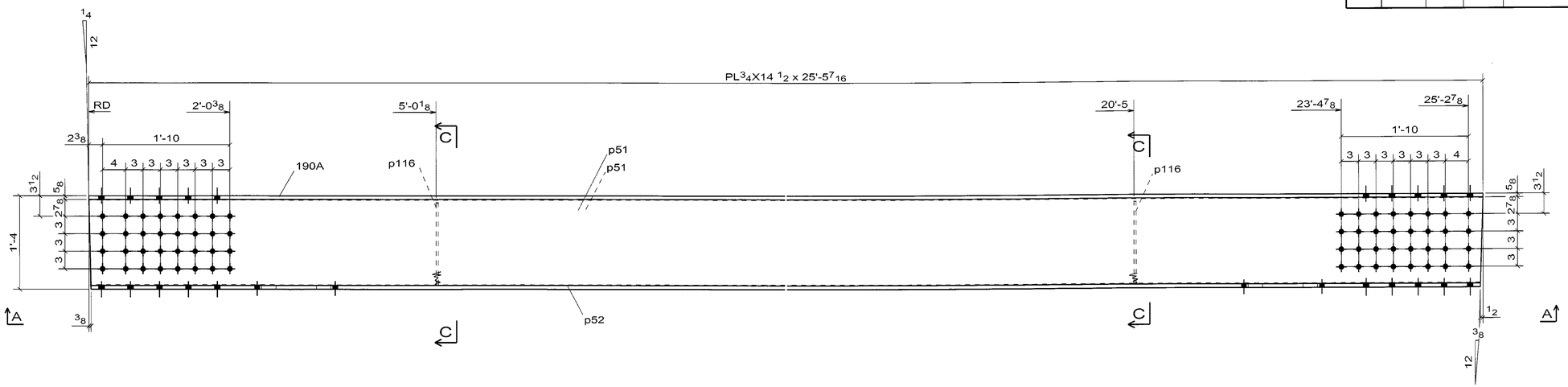

SIDE VIEW

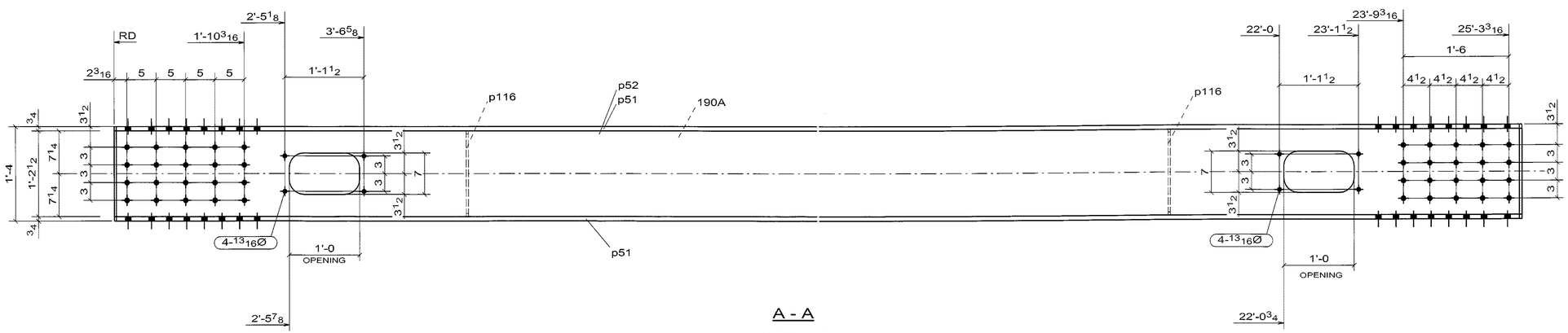

A - A

(BOTTOM VIEW)

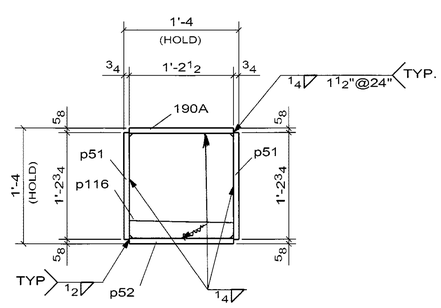

C - C

4 - BOX_BM -190A

WELD NOTE FOR ANY ASSEMBLY REQUIRING TACK WELDS:
- ALL TACK WELDS ARE TO BE MADE IN THE WELD JOINT ONLY

☐ CONFORMS TO DESIGN CONCEPT
☒ CONFORMS TO DESIGN CONCEPT WITH REVISIONS AS SHOWN
☐ NON-CONFORMING--REVISE & RESUBMIT

THIS SHOP DRAWING HAS BEEN REVIEWED FOR GENERAL CONFORMANCE WITH DESIGN CONCEPT ONLY AND DOES NOT RELIEVE THE FABRICATOR/VENDOR OF RESPONSIBILITY FOR CONFORMANCE WITH DESIGN DRAWINGS AND SPECIFICATIONS ALL OF WHICH HAVE PRIORITY OVER THIS SHOP DRAWING.

By A.F. Date 10/13/06

I.IN & ASSOCIATES, INC.

CONTRACTOR NOTE:
THIS DRAWING IS BEING SUBMITTED FOR APPROVAL AS REQUIRED. VERIFY OR SUPPLY ALL QUANTITIES, ALL DIMENSIONS, ALL INFORMATION, & ALL CONFIGURATIONS.

PRINT RECORD

NO.	USE	DATE
	APPR.	
	APPR.	
	PURCH	
	FAB	
	FAB. OFFICE	
	Q.A.	
	DIST.	
	ERECT.	

OPEN HOLES 15/16 Ø U/N
WELD BRIDGE WELDING CODE: D1.5
STEEL AS NOTED
BOLTS
SURFACE PREP-SP
PAINT SEE SPECS
REF DRAWING E4, E5

REV	DATE	DESCRIPTION	VS.
0	SEP/10/06	FOR APPROVAL	

RAINIER WELDING
19020 NE 84TH STREET - REDMOND, WA 98053
(425) 868-1300 FAX (425) 868-8872
STEEL AND ALUMINUM FABRICATING

PROJECT TOLT BRIDGE No 1834A
THIS DRAWING INCLUDES
FOR SNOHOMISH COUNTY OFFICIAL
DRAWN DJ DATE 07/31/2006 CHK DSC DATE 09/10/2006 DWG NUMBER 2707 - 190A 0

PRO DRAFT INC. PO# 676 PH:(604)689-8425
DRAWINGS PREPARED ON 3D-Xsteel File Name :- A [190.A]
Model Name: 725_102_TOLT_BRIDGE_541
Plot Date: 09/10/2006 12:13:57

No to SHIP	SHIP MARK	No. PIECES	PIECE MARK	DESCRIPTION	LENGTH	UNIT WT.	GRADE	REMARKS
2	189A			BOX_BM		3831		
		2	189A	PL3/4X14 1/2	25'-10 7/8"	955	AASHTO M 270 GR. 50	
		4	p50	PL3/4X14 3/4	25'-10 11/16"	963	AASHTO M 270 GR. 50	
		2	p53	PL3/4X14 1/2	25'-5 3/8"	905	AASHTO M 270 GR. 50	
		4	p116	PL3/8X14 1/2	1'-2 1/2"	22	AASHTO M 270 GR. 50	

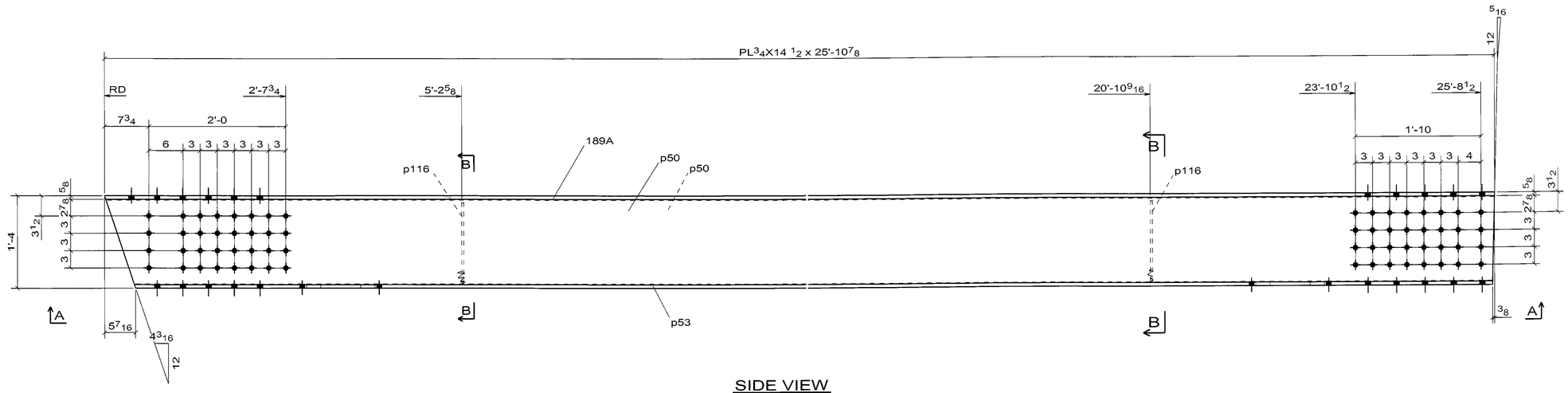

SIDE VIEW

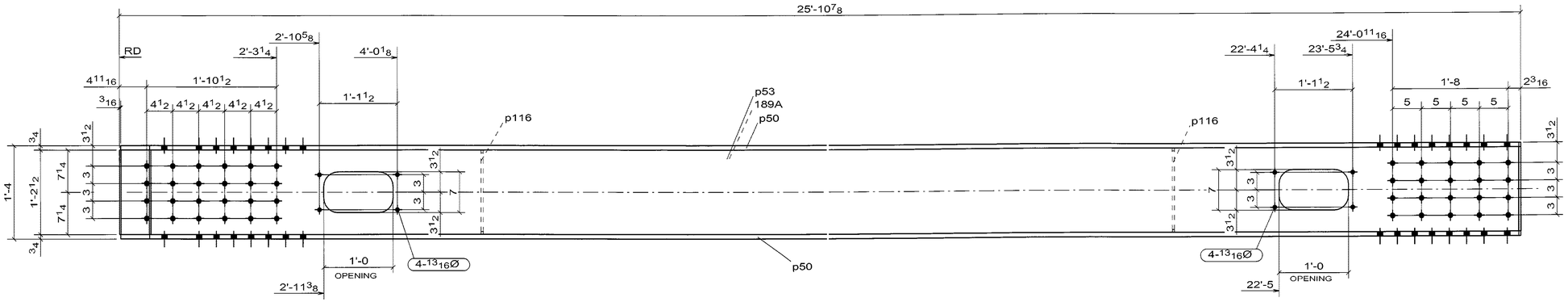

A - A
(BOTTOM VIEW)

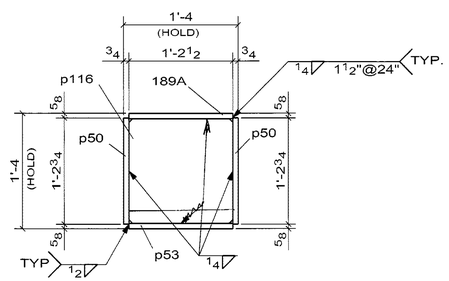

B - B

2 - BOX_BM - 189A

WELD NOTE FOR ANY ASSEMBLY REQUIRING TACK WELDS:
- ALL TACK WELDS ARE TO BE MADE IN THE WELD JOINT ONLY

☐ CONFORMS TO DESIGN CONCEPT
☒ CONFORMS TO DESIGN CONCEPT WITH REVISIONS AS SHOWN
☐ NON-CONFORMING–REVISE & RESUBMIT

THIS SHOP DRAWING HAS BEEN REVIEWED FOR GENERAL CONFORMANCE WITH DESIGN CONCEPT ONLY AND DOES NOT RELIEVE THE FABRICATOR/VENDOR OF RESPONSIBILITY FOR CONFORMANCE WITH DESIGN DRAWINGS AND SPECIFICATIONS ALL OF WHICH HAVE PRIORITY OVER THIS SHOP DRAWING.

By A. F Date 10/13/06

I.IN & ASSOCIATES, INC.

CONTRACTOR NOTE:
THIS DRAWING IS BEING SUBMITTED FOR APPROVAL AS REQUIRED. VERIFY OR SUPPLY ALL QUANTITIES, ALL DIMENSIONS, ALL INFORMATION, & ALL CONFIGURATIONS.

PRINT RECORD

NO.	USE	DATE
	APPR.	
	APPR.	
	PURCH	
	FAB	
	FAB. OFFICE	
	Q.A.	
	DIST.	
	ERECT.	

OPEN HOLES 15/16 Ø U/N
WELD BRIDGE WELDING CODE: D1.5
STEEL AS NOTED
BOLTS
SURFACE PREP-SP
PAINT SEE SPECS
REF DRAWING E4, E5

REV	DATE	DESCRIPTION	VS
0	SEP/10/06	FOR APPROVAL	

RAINIER WELDING
19020 NE 84TH STREET - REDMOND, WA 98053
(425) 868-1300 FAX (425) 868-8872
STEEL AND ALUMINUM FABRICATING

PROJECT TOLT BRIDGE No 1834A
THIS DRAWING INCLUDES
FOR SNOHOMISH COUNTY OFFICIAL

DRAWN DJ DATE 07/31/2006 | CHK DSC DATE 09/10/2006 | DWG NUMBER 2707 - 189A | 0

PRO DRAFT INC. PO# 676 PH:(604)589-6425
DRAWINGS PREPARED ON 3D-Xsitec File Name :- A [189.A]
Model Name: 725_102_TOLT_BRIDGE_541
Plot Date: 09/10/2006 12:13:53

No to SHIP	SHIP MARK	No PIECES	PIECE MARK	DESCRIPTION	LENGTH	UNIT WT.	GRADE	REMARKS
1	188A			BOX_BM		3831		
		1	188A	PL3/4X14 1/2	25'-10 7/8"	955	AASHTO M 270 GR. 50	
		1	p48	PL3/4X14 3/4	25'-10 11/16"	963	AASHTO M 270 GR. 50	
		1	p50	PL3/4X14 3/4	25'-10 11/16"	963	AASHTO M 270 GR. 50	
		1	p53	PL3/4X14 1/2	25'-5 3/8"	905	AASHTO M 270 GR. 50	
		2	p116	PL3/8X14 1/2	1'-2 1/2"	22	AASHTO M 270 GR. 50	

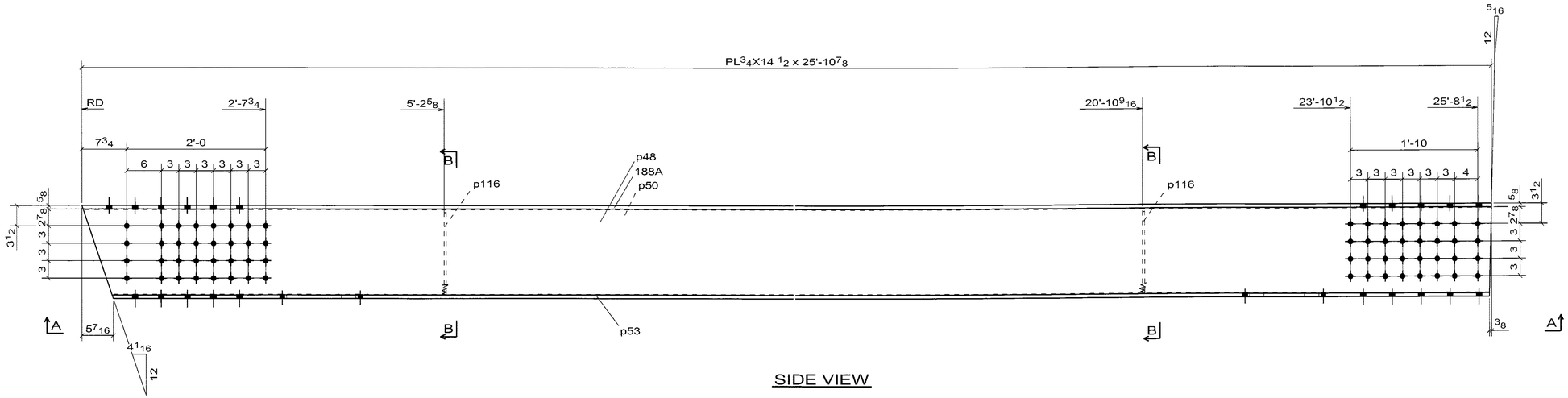

SIDE VIEW

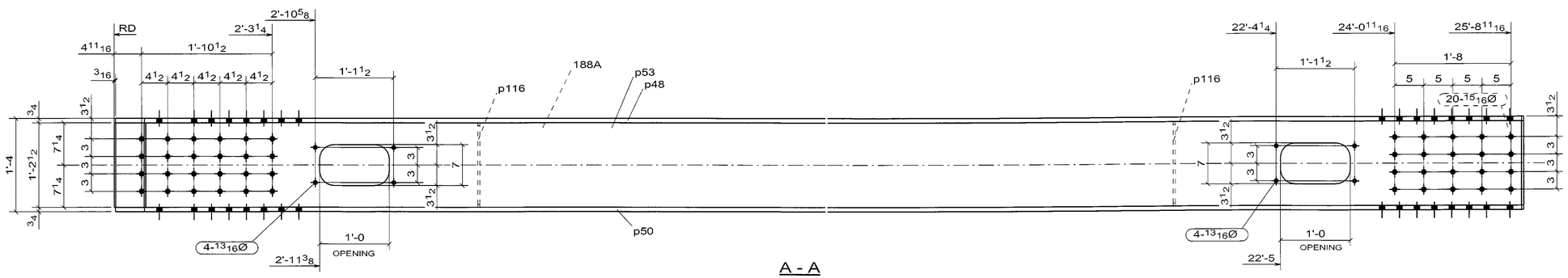

A - A

(BOTTOM VIEW)

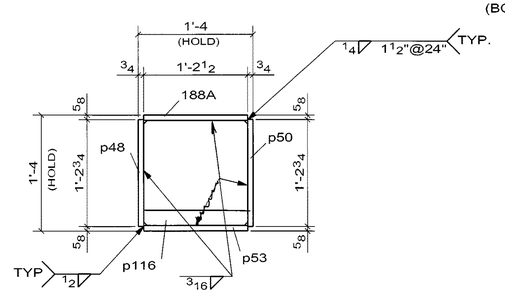

B - B

1 - BOX_BM -188A

WELD NOTE FOR ANY ASSEMBLY REQUIRING TACK WELDS:
- ALL TACK WELDS ARE TO BE MADE IN THE WELD JOINT IN ONLY

☐ CONFORMS TO DESIGN CONCEPT
☒ CONFORMS TO DESIGN CONCEPT WITH REVISIONS AS SHOWN
☐ NON-CONFORMING–REVISE & RESUBMIT

THIS SHOP DRAWING HAS BEEN REVIEWED FOR GENERAL CONFORMANCE WITH DESIGN CONCEPT ONLY AND DOES NOT RELIEVE THE FABRICATOR/VENDOR OF RESPONSIBILITY FOR CONFORMANCE WITH DESIGN DRAWINGS AND SPECIFICATIONS ALL OF WHICH HAVE PRIORITY OVER THIS SHOP DRAWING.

By A.F. Date 10/13/06

I.IN & ASSOCIATES, INC.

CONTRACTOR NOTE:
THIS DRAWING IS BEING SUBMITTED FOR APPROVAL AS REQUIRED. VERIFY OR SUPPLY ALL QUANTITIES, ALL DIMENSIONS, ALL INFORMATION, & ALL CONFIGURATIONS.

PRINT RECORD

NO.	USE	DATE
	APPR.	
	APPR.	
	PURCH	
	FAB	
	FAB. OFFICE	
	Q.A.	
	DIST.	
	ERECT.	

OPEN HOLES: 15/16 Ø U/N
WELD: BRIDGE WELDING CODE: D1.5
STEEL: AS NOTED
BOLTS:
SURFACE PREP-SP
PAINT: SEE SPECS
REF DRAWING: E4

REV	DATE	DESCRIPTION	VS
0	SEP/10/06	FOR APPROVAL	

RAINIER WELDING

19020 NE 84TH STREET - REDMOND, WA 98053
(425) 868-1300 FAX (425) 868-8872
STEEL AND ALUMINUM FABRICATING

PROJECT: TOLT BRIDGE No 1834A
THIS DRAWING INCLUDES:
FOR: SNOHOMISH COUNTY OFFICIAL
DRAWN: DJ DATE: 07/31/2006
CHK: DSC DATE: 09/10/2006
DWG NUMBER: 2707 - 188A

PRO DRAFT INC PD# 676 PH:(904)569-5425
DRAWINGS PREPARED ON 3D-Xacad File Name :- A [188-A]
Model Name: 725_102_TOLT_BRIDGE_541
Plot Date: 09/10/2006 12:13:50

No to SHIP	SHIP MARK	No PIECES	PIECE MARK	DESCRIPTION	LENGTH	UNIT WT.	GRADE	REMARKS
1	187A			BOX_BM		3831		
		1	187A	PL3/4X14 1/2	25'-10 7/8"	955	AASHTO M 270 GR. 50	
		1	p49	PL3/4X14 1/2	25'-5 3/8"	905	AASHTO M 270 GR. 50	
		1	p50	PL3/4X14 3/4	25'-10 11/16"	963	AASHTO M 270 GR. 50	
		2	p116	PL3/8X14 1/2	1'-2 1/2"	22	AASHTO M 270 GR. 50	
		1	p167	PL3/4X14 3/4	25'-10 11/16"	963	AASHTO M 270 GR. 50	

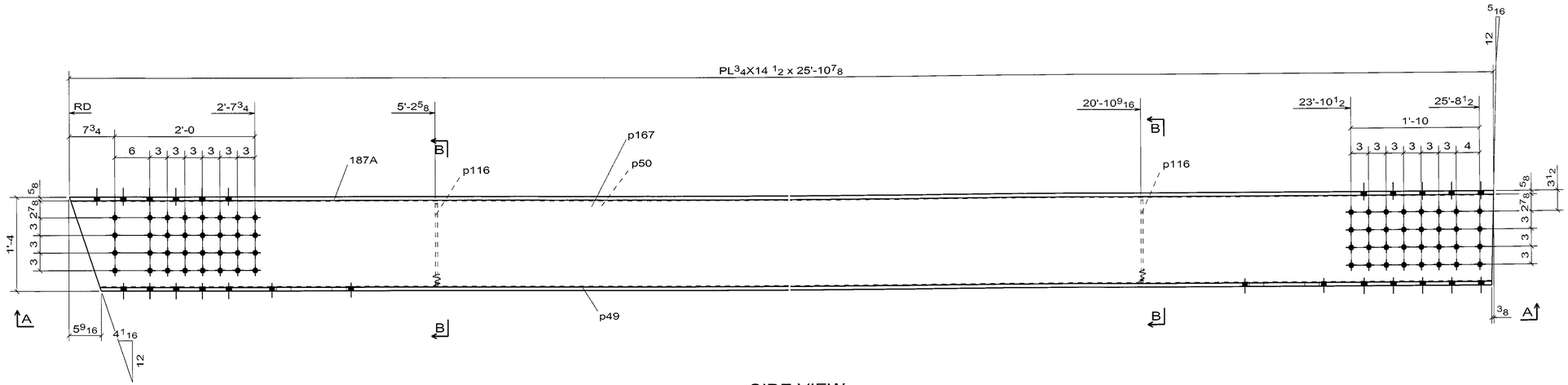

SIDE VIEW

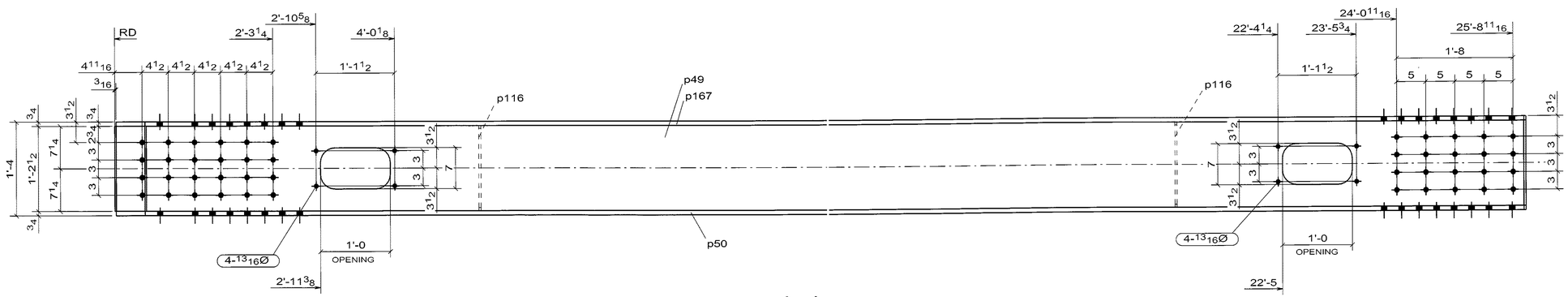

A - A

(BOTTOM VIEW)

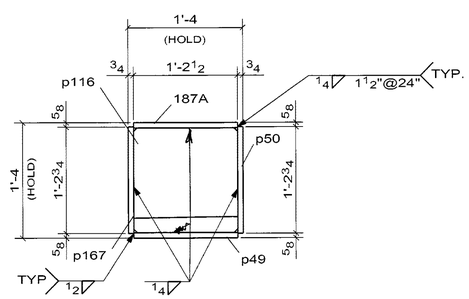

B - B

1 - BOX_BM -187A

WELD NOTE FOR ANY ASSEMBLY REQUIRING TACK WELDS:
- ALL TACK WELDS ARE TO BE MADE IN THE WELD JOINT ONLY

☐ CONFORMS TO DESIGN CONCEPT
☒ CONFORMS TO DESIGN CONCEPT WITH REVISIONS AS SHOWN
☐ NON-CONFORMING–REVISE & RESUBMIT

THIS SHOP DRAWING HAS BEEN REVIEWED FOR GENERAL CONFORMANCE WITH DESIGN CONCEPT ONLY AND DOES NOT RELIEVE THE FABRICATOR/VENDOR OF RESPONSIBILITY FOR CONFORMANCE WITH DESIGN DRAWINGS AND SPECIFICATIONS ALL OF WHICH HAVE PRIORITY OVER THIS SHOP DRAWING.

By A.F. Date 10/13/06

I.IN & ASSOCIATES, INC.

CONTRACTOR NOTE:
THIS DRAWING IS BEING SUBMITTED FOR APPROVAL AS REQUIRED. VERIFY OR SUPPLY ALL QUANTITIES, ALL DIMENSIONS, ALL INFORMATION, & ALL CONFIGURATIONS.

PRINT RECORD

NO.	USE	DATE
	APPR.	
	APPR.	
	PURCH	
	FAB	
	FAB. OFFICE	
	Q.A.	
	DIST.	
	ERECT.	

OPEN HOLES 15/16 Ø U/N
WELD BRIDGE WELDING CODE: D1.5
STEEL AS NOTED
BOLTS
SURFACE PREP-SP
PAINT SEE SPECS
REF DRAWING E5

REV	DATE	DESCRIPTION	VS
0	SEP/10/06	FOR APPROVAL	

RAINIER WELDING
19020 NE 84TH STREET - REDMOND, WA 98053
(425) 868-1300 FAX (425) 868-8872
STEEL AND ALUMINUM FABRICATING

PROJECT TOLT BRIDGE No 1834A
THIS DRAWING INCLUDES
FOR SNOHOMISH COUNTY OFFICIAL
DRAWN DJ DATE 07/31/2006 CHK DSC DATE 09/10/2006 DWG NUMBER 2707 - 187A 0

PRO DRAFT INC. PD#: 676 PH:(604)599-6435
DRAWINGS PREPARED ON 3D-Xsteel File Name :- A [187.A]
Model Name: 725_102_TOLT_BRIDGE_541
Plot Date: 09/10/2006 12:13:46

No to SHIP	SHIP MARK	No PIECES	PIECE MARK	DESCRIPTION	LENGTH	UNIT WT.	GRADE	REMARKS
1	186A			BOX_BM		3734		
		1	186A	PL3/4X14 1/2	24'-11 7/8"	923	AASHTO M 270 GR. 50	FCM/V
		1	p45	PL3/4X14 1/2	24'-11 7/8"	890	AASHTO M 270 GR. 50	FCM/V
		1	p46	PL3/4X14 3/4	24'-11 7/8"	939	AASHTO M 270 GR. 50	FCM/V
		1	p47	PL3/4X14 3/4	24'-11 7/8"	939	AASHTO M 270 GR. 50	FCM/V
		2	p116	PL3/8X14 1/2	1'-2 1/2"	22	AASHTO M 270 GR. 50	

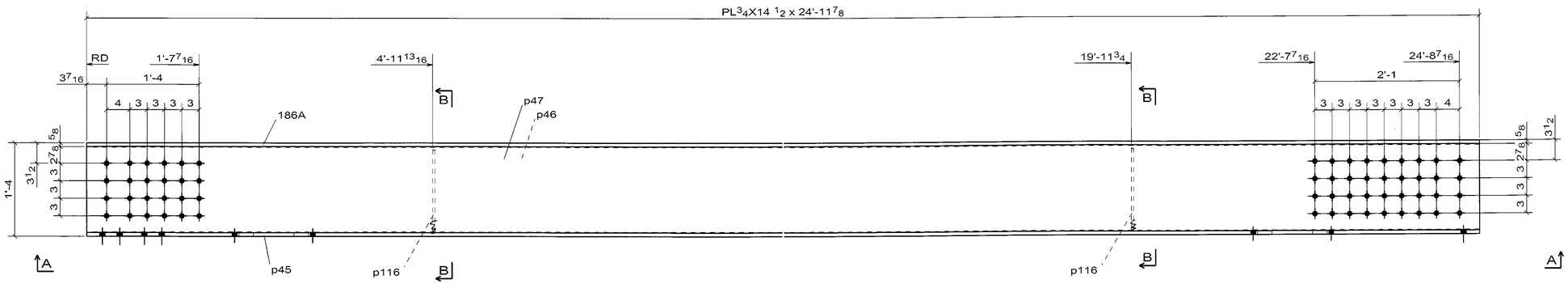

SIDE VIEW

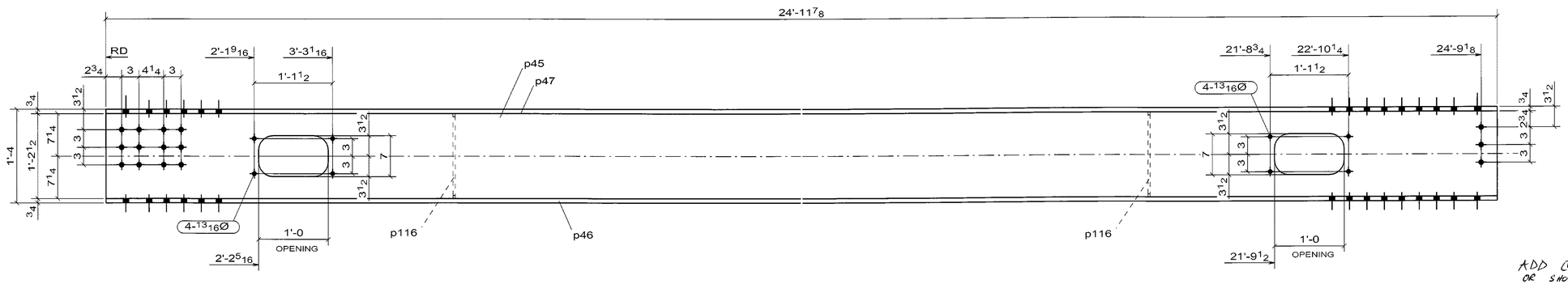

A - A

(BOTTOM VIEW)

ADD CAMBER RE S33 OR SHOW THAT IT HAS BEEN TAKEN INTO ACCOUNT

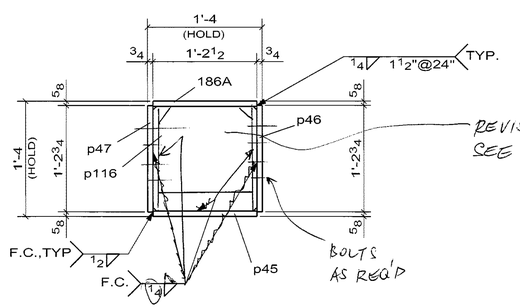

REVISE DIAPH. PL'S AS SHOWN ON 107A
SEE NOTE & SKETCH ON 107A

B - B

1 - BOX_BM - 186A

WELD NOTE FOR ANY ASSEMBLY REQUIRING TACK WELDS:
- ALL TACK WELDS ARE TO BE MADE IN THE WELD JOINT ONLY

☐ CONFORMS TO DESIGN CONCEPT
☐ CONFORMS TO DESIGN CONCEPT WITH REVISIONS AS SHOWN
☒ NON-CONFORMING–REVISE & RESUBMIT

THIS SHOP DRAWING HAS BEEN REVIEWED FOR GENERAL CONFORMANCE WITH DESIGN CONCEPT ONLY AND DOES NOT RELIEVE THE FABRICATOR/VENDOR OF RESPONSIBILITY FOR CONFORMANCE WITH DESIGN DRAWINGS AND SPECIFICATIONS ALL OF WHICH HAVE PRIORITY OVER THIS SHOP DRAWING.

By A.F. Date 10/13/06

I.IN & ASSOCIATES, INC.

CONTRACTOR NOTE:
THIS DRAWING IS BEING SUBMITTED FOR APPROVAL AS REQUIRED. VERIFY OR SUPPLY ALL QUANTITIES, ALL DIMENSIONS, ALL INFORMATION, & ALL CONFIGURATIONS.

PRINT RECORD

NO.	USE	DATE
	APPR.	
	APPR.	
	PURCH	
	FAB	
	FAB. OFFICE	
	Q.A.	
	DIST.	
	ERECT.	

OPEN HOLES: 15/16 Ø U/N
WELD: BRIDGE WELDING CODE: D1.5
STEEL: AS NOTED
BOLTS:
SURFACE PREP-SP
PAINT: SEE SPECS
REF DRAWING: E3

REV	DATE	DESCRIPTION	VS
0	SEP/10/06	FOR APPROVAL	

RAINIER WELDING
19020 NE 84TH STREET - REDMOND, WA 98053
(425) 868-1300 FAX (425) 868-8872
STEEL AND ALUMINUM FABRICATING

PROJECT: TOLT BRIDGE No 1834A
THIS DRAWING INCLUDES:
FOR: SNOHOMISH COUNTY OFFICIAL
DRAWN: DATE 07/31/2006
CHK: DATE 09/10/2006
DWG NUMBER: 2707 - 186A

PRO DRAFT INC PDI# 676 PH:(604)689-8425
DRAWINGS PREPARED ON 3D-Xstecl File Name :- A [186.A]
Model Name: 725_102_TOLT_BRIDGE_541
Plot Date: 09/10/2006 12:13:43

No to SHIP	SHIP MARK	No PIECES	PIECE MARK	DESCRIPTION	LENGTH	UNIT WT.	GRADE	REMARKS
2	185A			BOX_BM		3734		
		2	185A	PL3/4X14 1/2	24'-11 7/8"	923	AASHTO M 270 GR. 50	FCM/V
		2	p45	PL3/4X14 1/2	24'-11 7/8"	890	AASHTO M 270 GR. 50	FCM/V
		2	p46	PL3/4X14 3/4	24'-11 7/8"	939	AASHTO M 270 GR. 50	FCM/V
		2	p47	PL3/4X14 3/4	24'-11 7/8"	939	AASHTO M 270 GR. 50	FCM/V
		4	p116	PL3/8X14 1/2	1'-2 1/2"	22	AASHTO M 270 GR. 50	

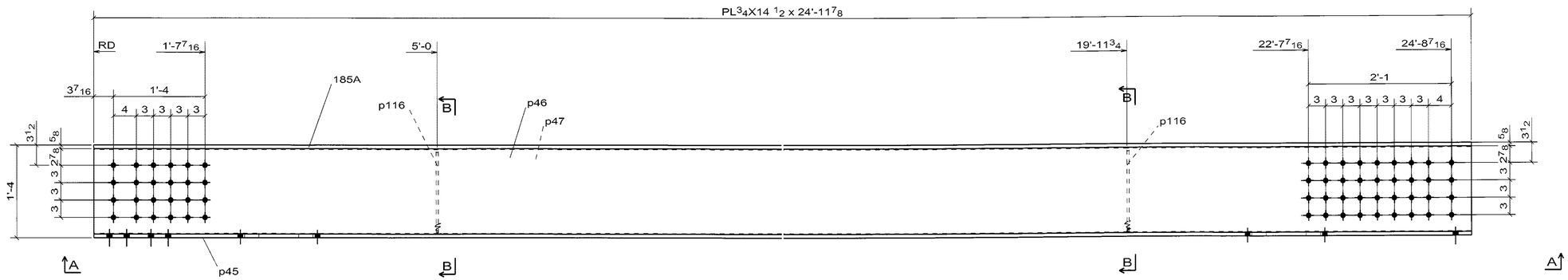

SIDE VIEW

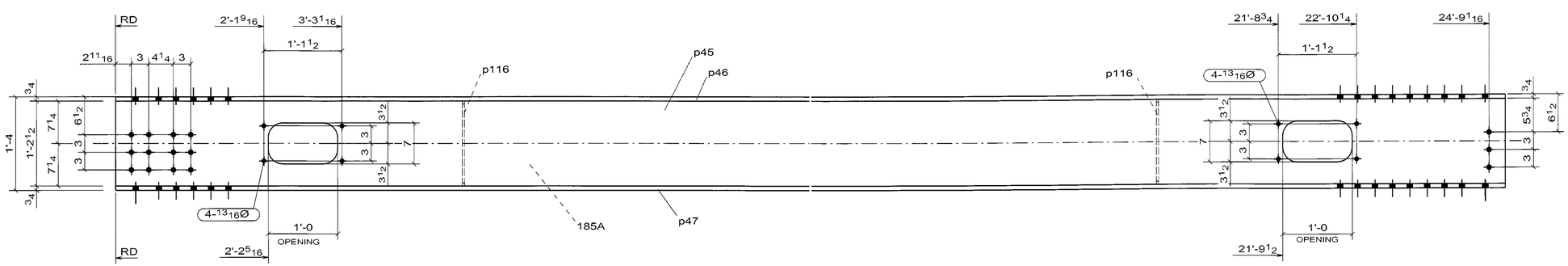

A - A

(BOTTOM VIEW)

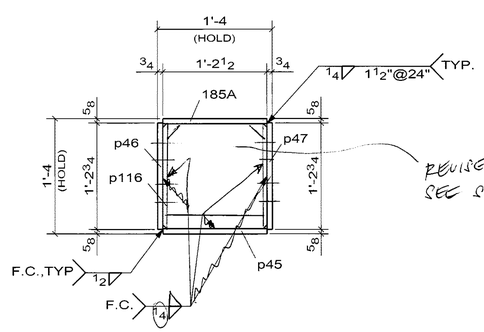

REVISE DIAPH. PL'S AS SHOWN ON 107A
SEE SKETCH & NOTE ON 107A

B - B

2 - BOX_BM -185A

WELD NOTE FOR ANY ASSEMBLY REQUIRING TACK WELDS:
- ALL TACK WELDS ARE TO BE MADE IN THE WELD JOINT ONLY

ADD CAMBER RE S33
OR SHOW THAT IT HAS BEEN
TAKEN INTO ACCOUNT

☐ CONFORMS TO DESIGN CONCEPT
☐ CONFORMS TO DESIGN CONCEPT WITH REVISIONS AS SHOWN
☒ NON-CONFORMING–REVISE & RESUBMIT

THIS SHOP DRAWING HAS BEEN REVIEWED FOR GENERAL CONFORMANCE WITH DESIGN CONCEPT ONLY AND DOES NOT RELIEVE THE FABRICATOR/VENDOR OF RESPONSIBILITY FOR CONFORMANCE WITH DESIGN DRAWINGS AND SPECIFICATIONS ALL OF WHICH HAVE PRIORITY OVER THIS SHOP DRAWING.

By A.F Date 10/13/06

I.IN & ASSOCIATES, INC.

CONTRACTOR NOTE:
THIS DRAWING IS BEING SUBMITTED FOR APPROVAL AS REQUIRED. VERIFY OR SUPPLY ALL QUANTITIES, ALL DIMENSIONS, ALL INFORMATION, & ALL CONFIGURATIONS.

PRINT RECORD

NO.	USE	DATE
	APPR.	
	APPR.	
	PURCH	
	FAB	
	FAB. OFFICE	
	Q.A.	
	DIST.	
	ERECT.	

OPEN HOLES: 15/16 Ø U/N
WELD: BRIDGE WELDING CODE: D1.5
STEEL: AS NOTED
BOLTS:
SURFACE PREP-SP:
PAINT: SEE SPECS
REF DRAWING: E2, E3

REV	DATE	DESCRIPTION	VS
0	SEP/10/06	FOR APPROVAL	

RAINIER WELDING

19020 NE 84TH STREET - REDMOND, WA 98053
(425) 868-1300 FAX (425) 868-8872
STEEL AND ALUMINUM FABRICATING

PROJECT: TOLT BRIDGE No 1834A
THIS DRAWING INCLUDES:
FOR: SNOHOMISH COUNTY OFFICIAL

DRAWN: DJ DATE 07/31/2006
CHK: DSC DATE 09/10/2006
DWG NUMBER: 2707 - 185A △0

PRO DRAFT INC PD# 676 PH:(904)569-6425
DRAWINGS PREPARED ON 3D-Xsteel File Name :> A [185-A]
Model Name: 725_102_TOLT_BRIDGE_541
Plot Date: 09/10/2006 12:13:39

No to SHIP	SHIP MARK	No PIECES	PIECE MARK	DESCRIPTION	LENGTH	UNIT WT.	GRADE	REMARKS
2	184A			BOX_BM		3645		
		2	184A	PL3/4X14 1/2	24'-2 7/8"	895	AASHTO M 270 GR. 50	FCMV
		2	p42	PL3/4X14 3/4	24'-2 7/8"	911	AASHTO M 270 GR. 50	FCMV
		2	p43	PL3/4X14 3/4	24'-2 7/8"	911	AASHTO M 270 GR. 50	FCMV
		2	p44	PL3/4X14 1/2	24'-2 7/8"	862	AASHTO M 270 GR. 50	FCMV
		6	p116	PL3/8X14 1/2	1'-2 1/2"	22	AASHTO M 270 GR. 50	

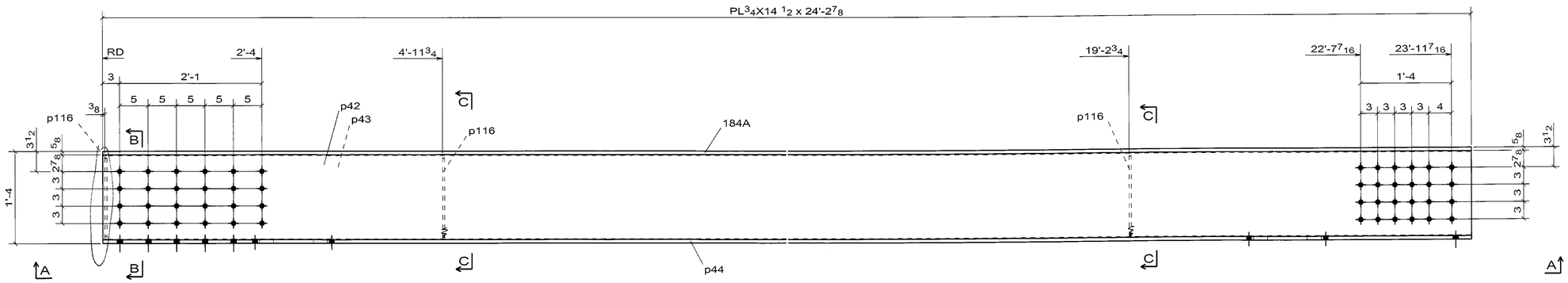

SIDE VIEW

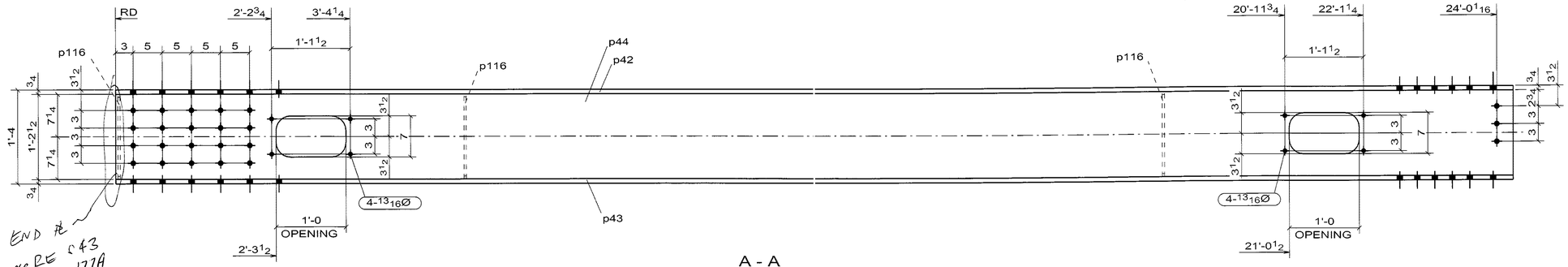

A - A
(BOTTOM VIEW)

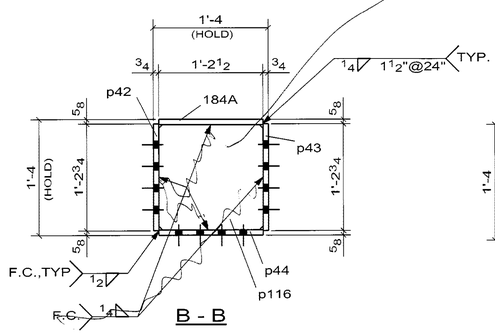

B - B

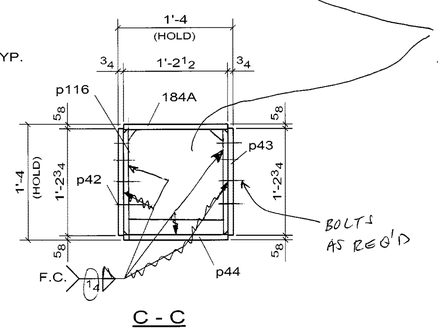

C - C

REVISE DIAPH. PL'S AS SHOWN ON 107A
SEE NOTE & SKETCH ON 107A

BOLTS AS REQ'D

ADD CAMBER PER S3
OR SHOW THAT IT HAS BEEN TAKEN INTO ACCOUNT

☐ CONFORMS TO DESIGN CONCEPT
☐ CONFORMS TO DESIGN CONCEPT WITH REVISIONS AS SHOWN
☒ NON-CONFORMING–REVISE & RESUBMIT

THIS SHOP DRAWING HAS BEEN REVIEWED FOR GENERAL CONFORMANCE WITH DESIGN CONCEPT ONLY AND DOES NOT RELIEVE THE FABRICATOR/VENDOR OF RESPONSIBILITY FOR CONFORMANCE WITH DESIGN DRAWINGS AND SPECIFICATIONS ALL OF WHICH HAVE PRIORITY OVER THIS SHOP DRAWING.

By A.F. Date 10/13/06

I.IN & ASSOCIATES, INC.

2 - BOX_BM -184A

WELD NOTE FOR ANY ASSEMBLY REQUIRING TACK WELDS:
- ALL TACK WELDS ARE TO BE MADE IN THE WELD JOINT ONLY

CONTRACTOR NOTE:
THIS DRAWING IS BEING SUBMITTED FOR APPROVAL AS REQUIRED. VERIFY OR SUPPLY ALL QUANTITIES, ALL DIMENSIONS, ALL INFORMATION, & ALL CONFIGURATIONS.

PRINT RECORD

NO.	USE	DATE
	APPR.	
	APPR.	
	PURCH	
	FAB	
	FAB. OFFICE	
	Q.A.	
	DIST.	
	ERECT.	

OPEN HOLES: 15/16 Ø U/N
WELD: BRIDGE WELDING CODE: D1.5
STEEL: AS NOTED
BOLTS:
SURFACE PREP-SP:
PAINT: SEE SPECS
REF DRAWING: E2, E3

REV	DATE	DESCRIPTION
0	SEP/10/06	FOR APPROVAL

RAINIER WELDING

19020 NE 84TH STREET - REDMOND, WA 98053
(425) 868-1300 FAX (425) 868-8872
STEEL AND ALUMINUM FABRICATING

PROJECT: TOLT BRIDGE No 1834A
THIS DRAWING INCLUDES:
FOR: SNOHOMISH COUNTY OFFICIAL
DRAWN: DJ DATE: 07/31/2006 CHK: DSC DATE: 09/10/2006 DWG NUMBER: 2707 - 184A

PRO DRAFT INC. PO# 676 PH:(504)589-6423
DRAWINGS PREPARED ON: 3D-Xsteel File Name :- A [184.A]
Model Name: 725_102_TOLT_BRIDGE_541
Plot Date: 09/10/2006 12:13:37

No to SHIP	SHIP MARK	No PIECES	PIECE MARK	DESCRIPTION	LENGTH	UNIT WT.	GRADE	REMARKS
2	183A			BOX_BM		3645		
		2	183A	PL3/4X14 1/2	24'-2 7/8"	895	AASHTO M 270 GR. 50	FCM/V
		2	p42	PL3/4X14 3/4	24'-2 7/8"	911	AASHTO M 270 GR. 50	FCM/V
		2	p43	PL3/4X14 3/4	24'-2 7/8"	911	AASHTO M 270 GR. 50	FCM/V
		2	p44	PL3/4X14 1/2	24'-2 7/8"	862	AASHTO M 270 GR. 50	FCM/V
		6	p116	PL3/8X14 1/2	1'-2 1/2"	22	AASHTO M 270 GR. 50	

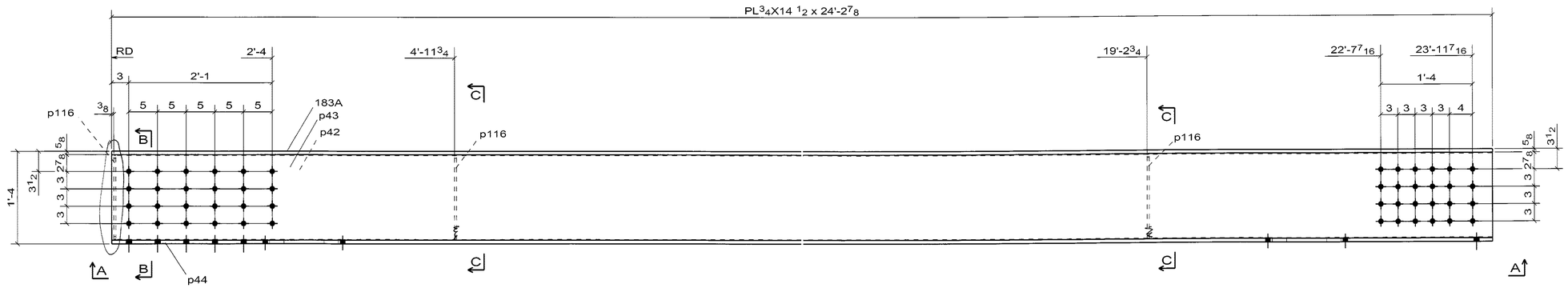

SIDE VIEW

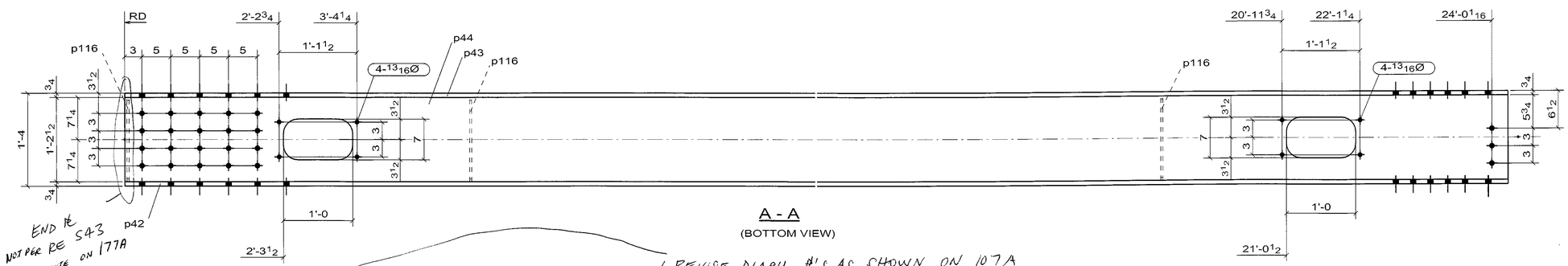

A - A

(BOTTOM VIEW)

REVISE DIAPH. PL'S AS SHOWN ON 107A
SEE NOTE & SKETCH ON 107

ADD CAMBER PER 533
OR SHOW THAT IT HAS BEEN
TAKEN INTO ACCOUNT

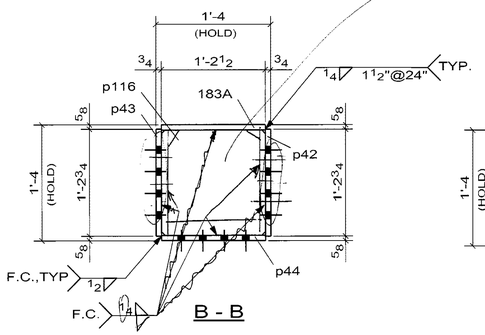

B - B

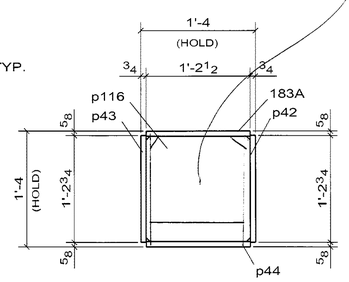

C - C

2 - BOX_BM - 183A

WELD NOTE FOR ANY ASSEMBLY REQUIRING TACK WELDS:
- ALL TACK WELDS ARE TO BE MADE IN THE WELD JOINT ONLY

☐ CONFORMS TO DESIGN CONCEPT
☐ CONFORMS TO DESIGN CONCEPT WITH REVISIONS AS SHOWN
☒ NON-CONFORMING–REVISE & RESUBMIT
THIS SHOP DRAWING HAS BEEN REVIEWED FOR GENERAL CONFORMANCE WITH DESIGN CONCEPT ONLY AND DOES NOT RELIEVE THE FABRICATOR/VENDOR OF RESPONSIBILITY FOR CONFORMANCE WITH DESIGN DRAWINGS AND SPECIFICATIONS ALL OF WHICH HAVE PRIORITY OVER THIS SHOP DRAWING.
By A.F. Date 10/13/06
I.IN & ASSOCIATES, INC.

CONTRACTOR NOTE:
THIS DRAWING IS BEING SUBMITTED FOR APPROVAL AS REQUIRED. VERIFY OR SUPPLY ALL QUANTITIES, ALL DIMENSIONS, ALL INFORMATION, & ALL CONFIGURATIONS.

PRINT RECORD

NO.	USE	DATE
	APPR.	
	APPR.	
	PURCH	
	FAB	
	FAB. OFFICE	
	Q.A.	
	DIST.	
	ERECT.	

OPEN HOLES 15/16 Ø U/N
WELD BRIDGE WELDING CODE: D1.5
STEEL AS NOTED
BOLTS
SURFACE PREP-SP
PAINT SEE SPECS
REF DRAWING E2, E3

REV	DATE	DESCRIPTION
0	SEP/10/06	FOR APPROVAL

RAINIER WELDING
19020 NE 84TH STREET - REDMOND, WA 98053
(425) 868-1300 FAX (425) 868-8872
STEEL AND ALUMINUM FABRICATING

PROJECT TOLT BRIDGE No 1834A
THIS DRAWING INCLUDES
FOR SNOHOMISH COUNTY OFFICIAL
DRAWN DJ DATE 07/31/2006
CHK DSC DATE 09/10/2006
DWG NUMBER 2707 - 183A

PRO DRAFT INC PD# 676 PH:(604)589-6425
DRAWINGS PREPARED ON 3D-Xsteel File Name :- A [183.A]
Model Name: 725_102_TOLT_BRIDGE_541
Plot Date: 09/10/2006 12:13:34