No to SHIP	SHIP MARK	No PIECES	PIECE MARK	DESCRIPTION	LENGTH	UNIT WT.	GRADE	REMARKS
2	285A			BOX_BM		2541		
		2	285A	PL3/8X22 15/16 BEND	44'-6 1/2"	1254	AASHTO M 270 GR. 50	
		2	p109	PL3/8X22 15/16 BEND	44'-6 1/2"	1287	AASHTO M 270 GR. 50	

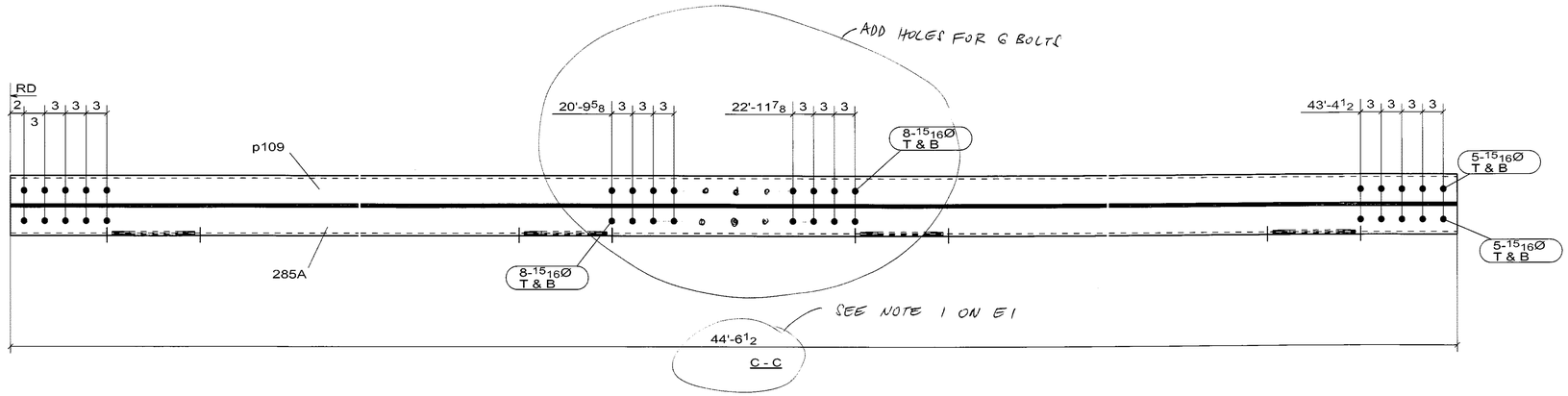

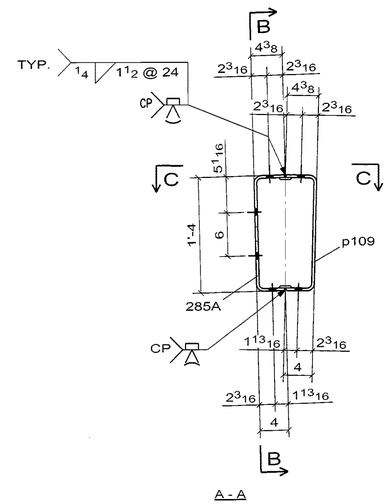

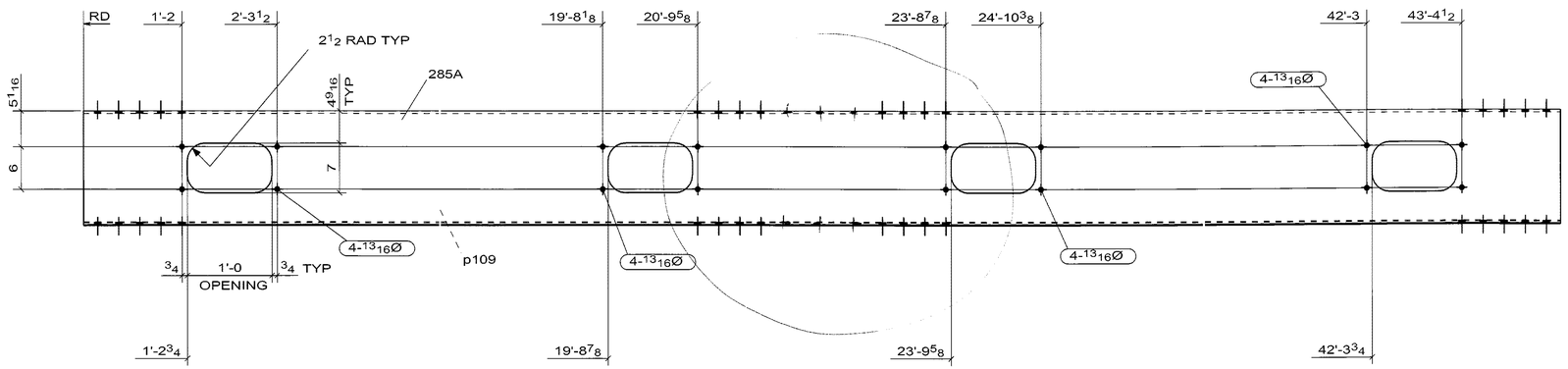

B - B

2 - BOX_BM -285A

WELD NOTE FOR ANY ASSEMBLY REQUIRING TACK WELDS:
- ALL TACK WELDS ARE TO BE MADE IN THE WELD JOINT ONLY

☐ CONFORMS TO DESIGN CONCEPT
☒ CONFORMS TO DESIGN CONCEPT WITH REVISIONS AS SHOWN
☐ NON-CONFORMING–REVISE & RESUBMIT

THIS SHOP DRAWING HAS BEEN REVIEWED FOR GENERAL CONFORMANCE WITH DESIGN CONCEPT ONLY AND DOES NOT RELIEVE THE FABRICATOR/VENDOR OF RESPONSIBILITY FOR CONFORMANCE WITH DESIGN DRAWINGS AND SPECIFICATIONS ALL OF WHICH HAVE PRIORITY OVER THIS SHOP DRAWING.

By A.F. Date 10/13/06

I.IN & ASSOCIATES, INC.

CONTRACTOR NOTE:
THIS DRAWING IS BEING SUBMITTED FOR APPROVAL AS REQUIRED. VERIFY OR SUPPLY ALL QUANTITIES, ALL DIMENSIONS, ALL INFORMATION, & ALL CONFIGURATIONS.

PRINT RECORD

NO.	USE	DATE
	APPR.	
	APPR.	
	PURCH	
	FAB	
	FAB. OFFICE	
	Q.A.	
	DIST.	
	ERECT.	

OPEN HOLES: 15/16 Ø U/N
WELD: BRIDGE WELDING CODE: D1.5
STEEL: AS NOTED
BOLTS:
SURFACE PREP: SP
PAINT: SEE SPECS
REF. DRAWING: E4, E5

REV	DATE	DESCRIPTION	
0	SEP/10/06	FOR APPROVAL	VS

RAINIER WELDING

19020 NE 84TH STREET - REDMOND, WA 98053
(425) 868-1300 FAX (425) 868-8872
STEEL AND ALUMINUM FABRICATING

PROJECT: TOLT BRIDGE No 1834A
THIS DRAWING INCLUDES:
FOR: SNOHOMISH COUNTY OFFICIAL
DRAWN: DJ DATE 07/31/2006 CHK: DSC DATE 09/10/2006
DWG NUMBER: 2707 - 285A 0

PRO DRAFT INC. PD# 676 PH:(604)589-6425
DRAWINGS PREPARED ON 3D-Xdecl File Name :- A [285.A]
Model Name: 725_102_TOLT_BRIDGE_541
Plot Date: 09/10/2006 12:17:16

No to SHIP	SHIP MARK	No PIECES	PIECE MARK	DESCRIPTION	LENGTH	UNIT WT.	GRADE	REMARKS
1	332A			BOX_BM		3406		
		1	332A	PL3/8X30 5/8 BEND	44'-6 1/2"	1682	AASHTO M 270 GR. 50	
		1	p108	PL3/8X30 5/8 BEND	44'-6 1/2"	1723	AASHTO M 270 GR. 50	

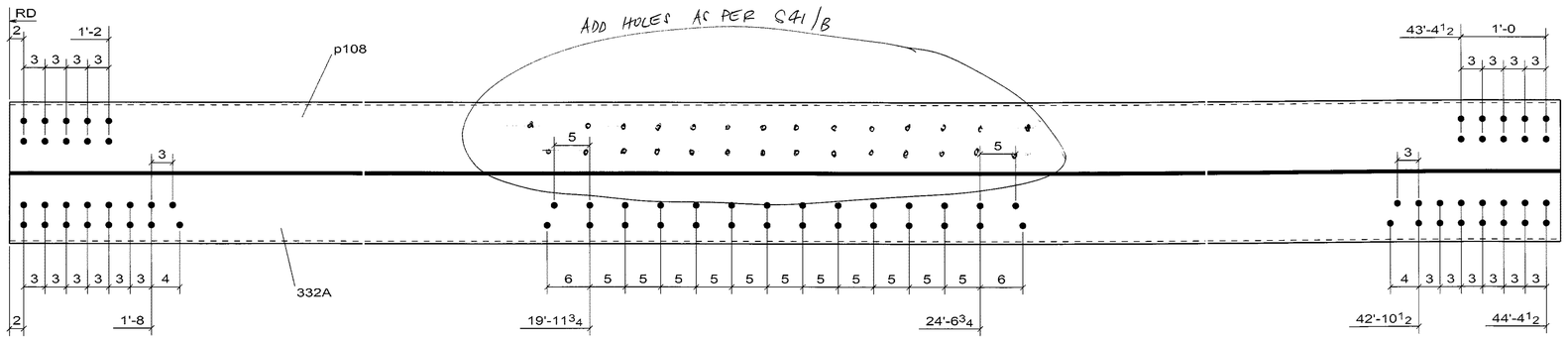

B - B

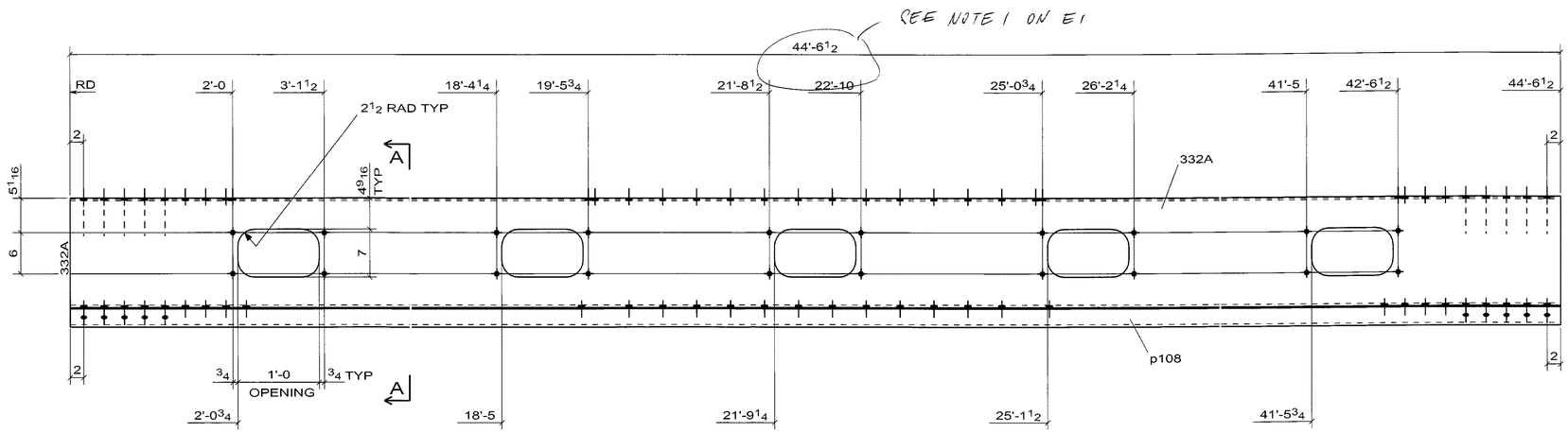

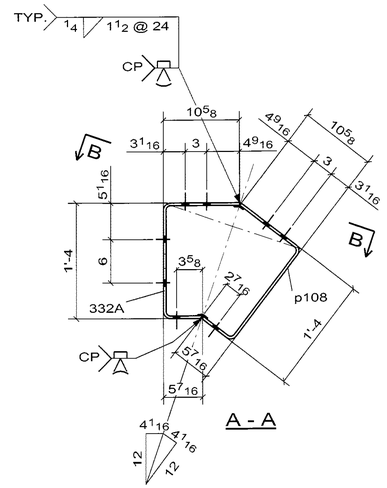

A - A

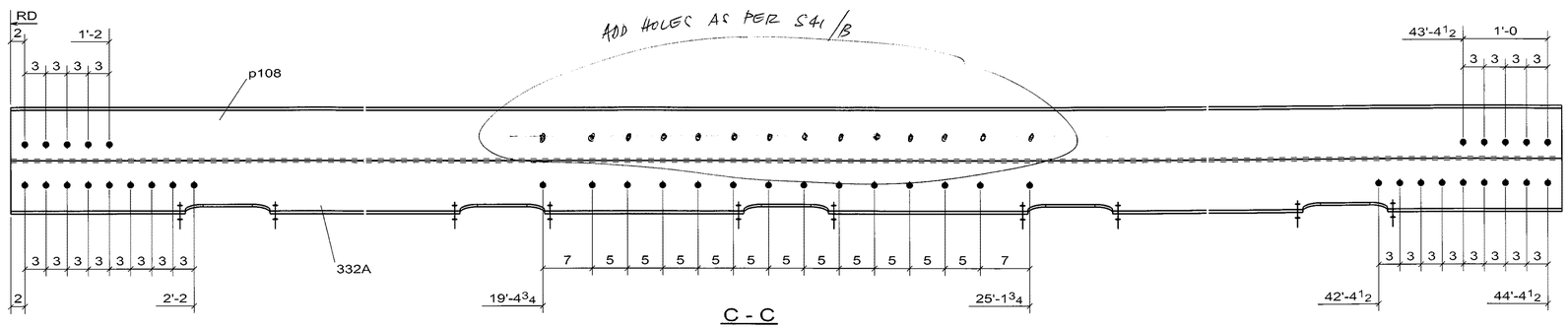

C - C

1 - BOX_BM -332A

☐ CONFORMS TO DESIGN CONCEPT
☐ CONFORMS TO DESIGN CONCEPT WITH REVISIONS AS SHOWN
☒ NON-CONFORMING–REVISE & RESUBMIT

THIS SHOP DRAWING HAS BEEN REVIEWED FOR GENERAL CONFORMANCE WITH DESIGN CONCEPT ONLY AND DOES NOT RELIEVE THE FABRICATOR/VENDOR OF RESPONSIBILITY FOR CONFORMANCE WITH DESIGN DRAWINGS AND SPECIFICATIONS ALL OF WHICH HAVE PRIORITY OVER THIS SHOP DRAWING.

By A.F. 10/13/06

I.IN & ASSOCIATES, INC.

CONTRACTOR NOTE:
THIS DRAWING IS BEING SUBMITTED FOR APPROVAL AS REQUIRED. VERIFY OR SUPPLY ALL QUANTITIES, ALL DIMENSIONS, ALL INFORMATION, & ALL CONFIGURATIONS.

PRINT RECORD			OPEN HOLES 15/16 Ø U/N
NO.	USE	DATE	WELD BRIDGE WELDING CODE: D1.5
	APPR.		STEEL AS NOTED
	APPR.		BOLTS
	PURCH		SURFACE PREP-SP
	FAB		PAINT SEE SPECS
	FAB. OFFICE		REF DRAWING E4
	Q.A.		
	DIST.		
	ERECT.		

REV	DATE	DESCRIPTION	
0	SEP/10/06	FOR APPROVAL	VS

RAINIER WELDING

19020 NE 84TH STREET - REDMOND, WA 98053
(425) 868-1300 FAX (425) 868-8872
STEEL AND ALUMINUM FABRICATING

PROJECT: TOLT BRIDGE No 1834A
THIS DRAWING INCLUDES
FOR: SNOHOMISH COUNTY OFFICIAL
DRAWN DJ DATE 09/07/2006 | CHK DSC DATE 09/10/2006 | DWG NUMBER 2707 - 332A 0

WELD NOTE FOR ANY ASSEMBLY REQUIRING TACK WELDS:
- ALL TACK WELDS ARE TO BE MADE IN THE WELD JOINT ONLY

PRO DRAFT INC. PD# 676 Ph:(604)569-6425
DRAWINGS PREPARED ON 3D-Xsteel File Name :- A [332.A]
Model Name: 725_102_TOLT_BRIDGE_541
Plot Date: 09/10/2006 12:16:03

No to SHIP	SHIP MARK	No PIECES	PIECE MARK	DESCRIPTION	LENGTH	UNIT WT.	GRADE	REMARKS
1	331A			BOX_BM		2541		
		1	331A	PL3/8X22 15/16 BEND	44'-6 1/2"	1254	AASHTO M 270 GR. 50	
		1	p110	PL3/8X22 15/16 BEND	44'-6 1/2"	1287	AASHTO M 270 GR. 50	

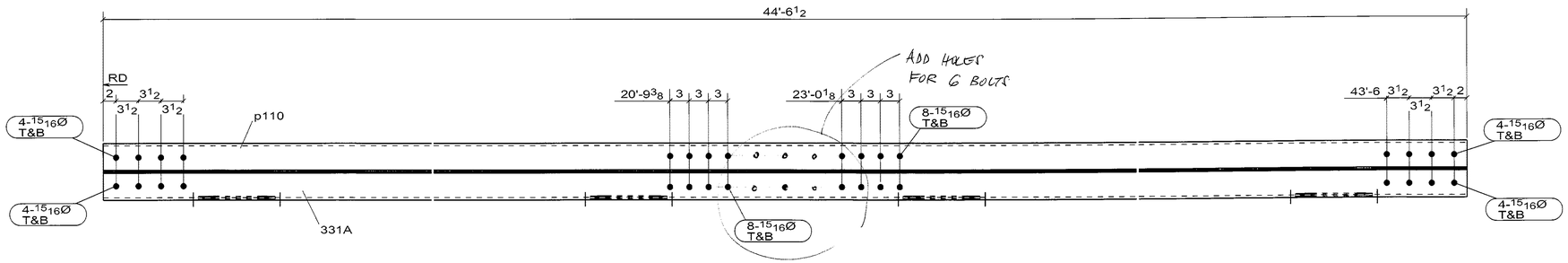

C - C

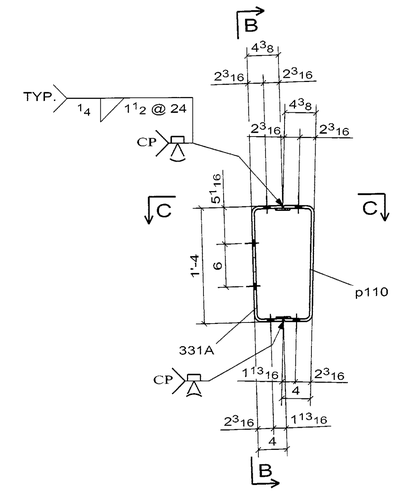

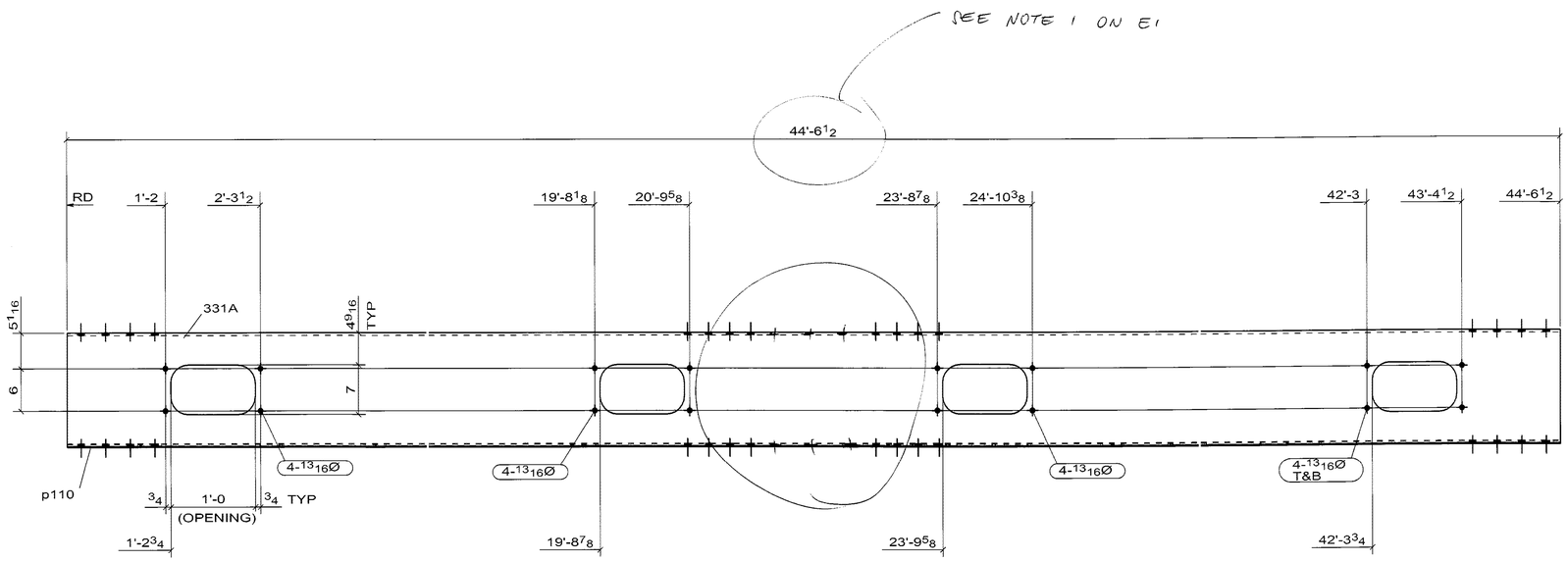

B - B

NOT FOUND ON E5 !
331A IS NOT PART OF TOLT BRIDGE JOB ?

1 - BOX_BM -331A

WELD NOTE FOR ANY ASSEMBLY REQUIRING TACK WELDS:
- ALL TACK WELDS ARE TO BE MADE IN THE WELD JOINT ONLY

CONTRACTOR NOTE:
THIS DRAWING IS BEING SUBMITTED FOR APPROVAL AS REQUIRED. VERIFY OR SUPPLY ALL QUANTITIES, ALL DIMENSIONS, ALL INFORMATION, & ALL CONFIGURATIONS.

PRINT RECORD

NO.	USE	DATE
	APPR.	
	APPR.	
	PURCH	
	FAB	
	FAB. OFFICE	
	Q.A.	
	DIST.	
	ERECT.	

OPEN HOLES 15/16 Ø U/N
WELD BRIDGE WELDING CODE: D1.5
STEEL AS NOTED
BOLTS
SURFACE PREP-SP
PAINT SEE SPECS
REF.DRAWING E5

☐ CONFORMS TO DESIGN CONCEPT
☒ CONFORMS TO DESIGN CONCEPT WITH REVISIONS AS SHOWN
☐ NON-CONFORMING–REVISE & RESUBMIT
THIS SHOP DRAWING HAS BEEN REVIEWED FOR GENERAL CONFORMANCE WITH DESIGN CONCEPT ONLY AND DOES NOT RELIEVE THE FABRICATOR/VENDOR OF RESPONSIBILITY FOR CONFORMANCE WITH DESIGN DRAWINGS AND SPECIFICATIONS ALL OF WHICH HAVE PRIORITY OVER THIS SHOP DRAWING.
By A.F. Date 10/13/06
LIN & ASSOCIATES, INC.

REV	DATE	DESCRIPTION	
0	SEP/10/06	FOR APPROVAL	VS

RAINIER WELDING
19020 NE 84TH STREET - REDMOND, WA 98053
(425) 868-1300 FAX (425) 868-8872
STEEL AND ALUMINUM FABRICATING

PROJECT TOLT BRIDGE No 1834A
THIS DRAWING INCLUDES
FOR SNOHOMISH COUNTY OFFICIAL
DRAWN AT DATE 09/08/2006 CHK DSC DATE 09/10/2006 DWG NUMBER 2707 - 331A 0

PRO DRAFT INC. PD# 676 PH:(904)589-6425
DRAWINGS PREPARED ON: JD-Xsteel File Name :- A [331.A]
Model Name: 725_102_TOLT_BRIDGE_541
Plot Date: 09/10/2006 12:17:26

No to SHIP	SHIP MARK	No. PIECES	PIECE MARK	DESCRIPTION	LENGTH	UNIT WT.	GRADE	REMARKS
2	330A			GUSSET_PLATE		549		
		2	330A	PL3/4X62 1/8	5'-2 15/16"	549	AASHTO M 270 GR. 50	BEND

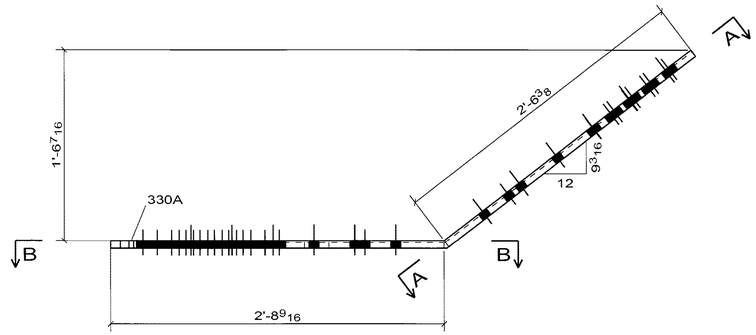

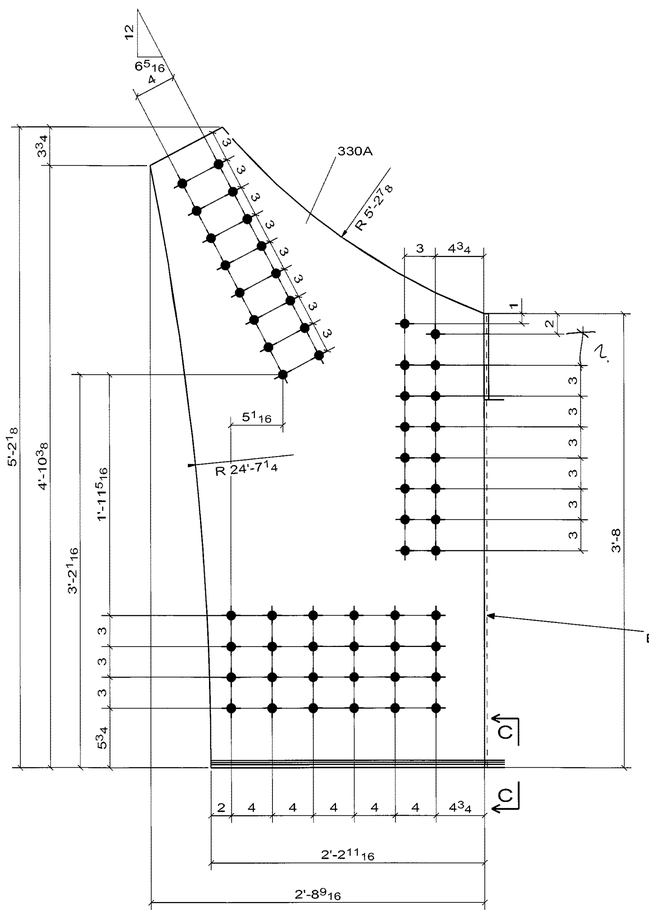

B - B

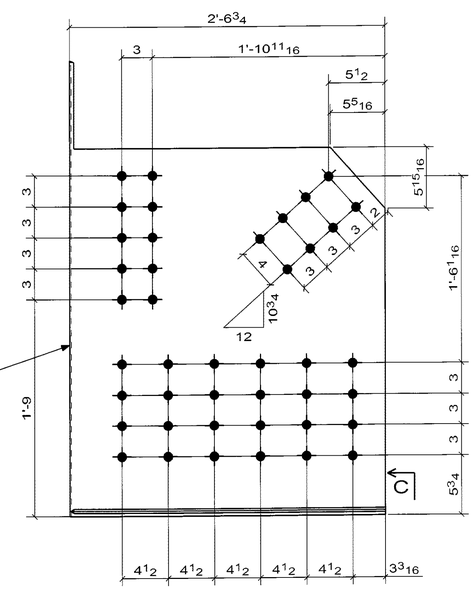

A - A

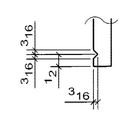

C - C
(TYP.)

2 - GUSSET_PLATE -330A

WELD NOTE FOR ANY ASSEMBLY REQUIRING TACK WELDS:
- ALL TACK WELDS ARE TO BE MADE IN THE WELD JOINT ONLY

☐ CONFORMS TO DESIGN CONCEPT
☒ CONFORMS TO DESIGN CONCEPT WITH REVISIONS AS SHOWN
☐ NON-CONFORMING–REVISE & RESUBMIT

THIS SHOP DRAWING HAS BEEN REVIEWED FOR GENERAL CONFORMANCE WITH DESIGN CONCEPT ONLY AND DOES NOT RELIEVE THE FABRICATOR/VENDOR OF RESPONSIBILITY FOR CONFORMANCE WITH DESIGN DRAWINGS AND SPECIFICATIONS ALL OF WHICH TAKE PRIORITY OVER THIS SHOP DRAWING.

By A.F. 10/13/06

I.IN & ASSOCIATES, INC.

CONTRACTOR NOTE:
THIS DRAWING IS BEING SUBMITTED FOR APPROVAL AS REQUIRED. VERIFY OR SUPPLY ALL QUANTITIES, ALL DIMENSIONS, ALL INFORMATION, & ALL CONFIGURATIONS.

PRINT RECORD

NO.	USE	DATE
	APPR.	
	APPR.	
	PURCH	
	FAB	
	FAB. OFFICE	
	Q.A.	
	DIST.	
	ERECT.	

OPEN HOLES 15/16 Ø U/N
WELD BRIDGE WELDING CODE: D1.5
STEEL AS NOTED
BOLTS
SURFACE PREP-SP
PAINT SEE SPECS
REF.DRAWING E10

REV	DATE	DESCRIPTION	VS
0	SEP/10/06	FOR APPROVAL	

RAINIER WELDING

19020 NE 84TH STREET - REDMOND, WA 98053
(425) 868-1300 FAX (425) 868-8872
STEEL AND ALUMINUM FABRICATING

PROJECT: TOLT BRIDGE No 1834A
THIS DRAWING INCLUDES
FOR: SNOHOMISH COUNTY OFFICIAL

DRAWN AT DATE 09/07/2006 | CHK. DSC DATE 09/10/2006 | DWG NUMBER 2707 - 330A | 0

PRO DRAFT INC. PD# 676 PH:(904)589-6425
DRAWINGS PREPARED ON 3D-Xsteel File Name :- A [330.A]
Model Name: T25_102_TOLT_BRIDGE_541
Plot Date: 09/10/2006 12:15:59

No to SHIP	SHIP MARK	No. PIECES	PIECE MARK	DESCRIPTION	LENGTH	UNIT WT.	GRADE	REMARKS
2	329A			GUSSET_PLATE		549		
		2	329A	PL3/4X62 1/8	5'-2 15/16"	549	AASHTO M 270 GR. 50	BEND

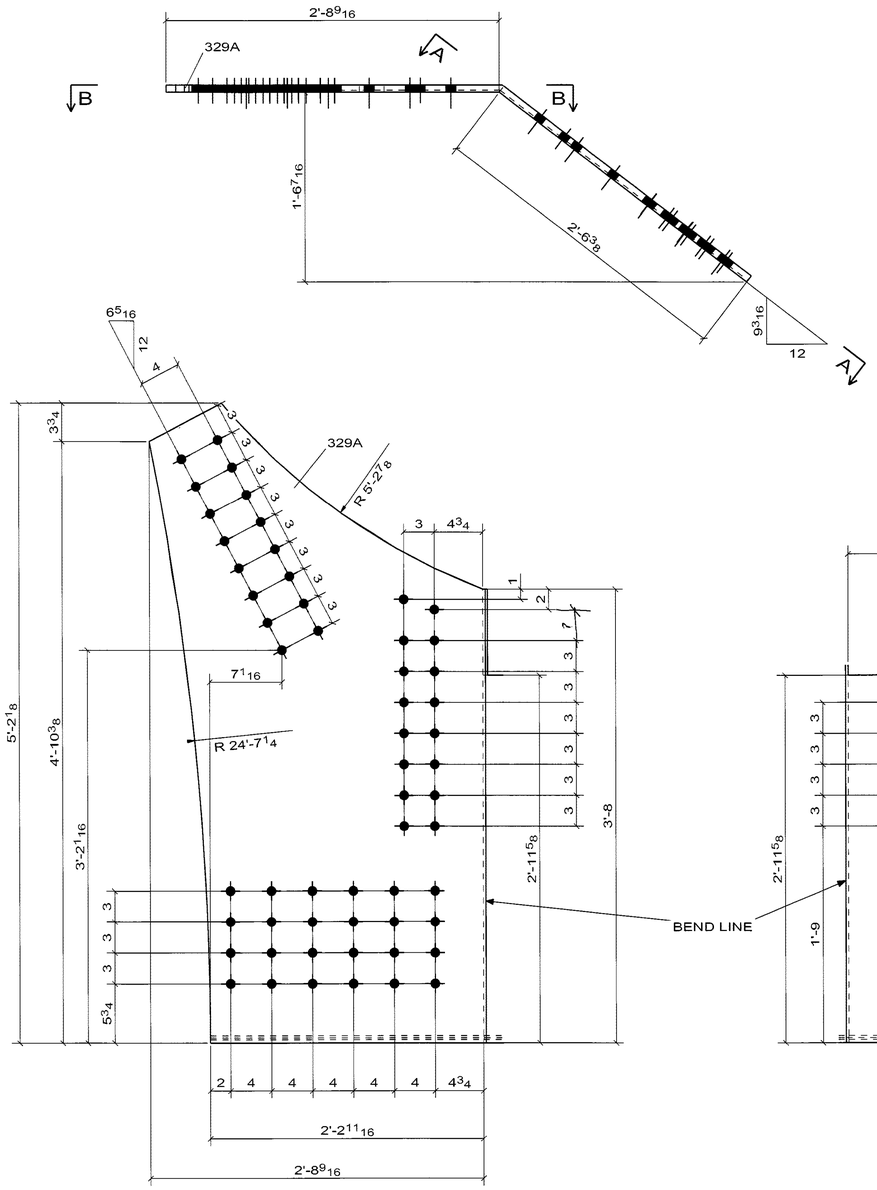

B - B

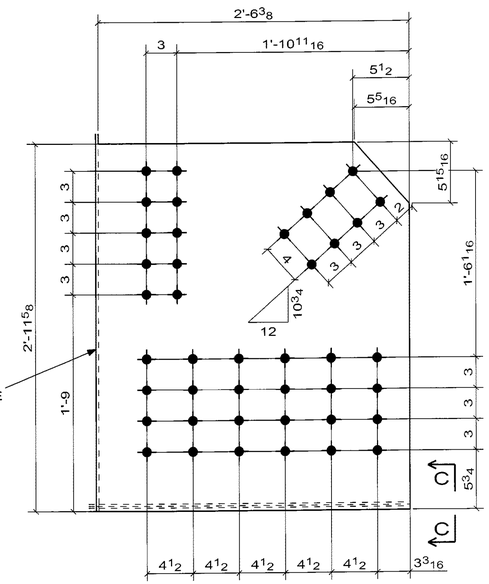

A - A

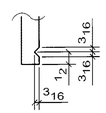

C - C
(TYP.)

2 - GUSSET_PLATE -329A

☐ CONFORMS TO DESIGN CONCEPT
☒ CONFORMS TO DESIGN CONCEPT WITH REVISIONS AS SHOWN
☐ NON-CONFORMING–REVISE & RESUBMIT

THIS SHOP DRAWING HAS BEEN REVIEWED FOR GENERAL CONFORMANCE WITH DESIGN CONCEPT ONLY AND DOES NOT RELIEVE THE FABRICATOR/VENDOR OF RESPONSIBILITY FOR CONFORMANCE WITH DESIGN DRAWINGS AND SPECIFICATIONS ALL OF WHICH HAVE PRIORITY OVER THIS SHOP DRAWING.

By A.F. Date 10/13/06

LIN & ASSOCIATES, INC.

CONTRACTOR NOTE:
THIS DRAWING IS BEING SUBMITTED FOR APPROVAL AS REQUIRED. VERIFY OR SUPPLY ALL QUANTITIES, ALL DIMENSIONS, ALL INFORMATION, & ALL CONFIGURATIONS.

PRINT RECORD

NO.	USE	DATE
	APPR.	
	APPR.	
	PURCH	
	FAB	
	FAB. OFFICE	
	Q.A.	
	DIST.	
	ERECT.	

OPEN HOLES: 15/16 Ø U/N
WELD: BRIDGE WELDING CODE: D1.5
STEEL: AS NOTED
BOLTS:
SURFACE PREP-SP:
PAINT: SEE SPECS
REF DRAWING: E10

REV	DATE	DESCRIPTION	VS.
0	SEP/10/06	FOR APPROVAL	

RAINIER WELDING
19020 NE 84TH STREET - REDMOND, WA 98053
(425) 868-1300 FAX (425) 868-8872
STEEL AND ALUMINUM FABRICATING

PROJECT: TOLT BRIDGE No 1834A
THIS DRAWING INCLUDES
FOR: SNOHOMISH COUNTY OFFICIAL
DRAWN: AT DATE: 09/07/2006
CHK: DSC DATE: 09/10/2006
DWG NUMBER: 2707 - 329A
0

WELD NOTE FOR ANY ASSEMBLY REQUIRING TACK WELDS:
- ALL TACK WELDS ARE TO BE MADE IN THE WELD JOINT ONLY

PRO DRAFT INC. PD# 676 PH:(904)585-6425
DRAWINGS PREPARED ON 3D-Xsecl File Name :- A [329.A]
Model Name: 725_102_TOLT_BRIDGE_541
Plot Date: 09/10/2006 12:15:56

No to SHIP	SHIP MARK	No PIECES	PIECE MARK	DESCRIPTION	LENGTH	UNIT WT.	GRADE	REMARKS
1	328A			BOX_BM		3734		
		1	328A	PL3/4X14 1/2	24'-11 7/8"	923	AASHTO M 270 GR. 50	FCM/V
		1	p46	PL3/4X14 3/4	24'-11 7/8"	939	AASHTO M 270 GR. 50	FCM/V
		1	p47	PL3/4X14 3/4	24'-11 7/8"	939	AASHTO M 270 GR. 50	FCM/V
		2	p116	PL3/8X14 1/2	1'-2 1/2"	22	AASHTO M 270 GR. 50	
		1	p133	PL3/4X14 1/2	24'-11 7/8"	890	AASHTO M 270 GR. 50	FCM/V

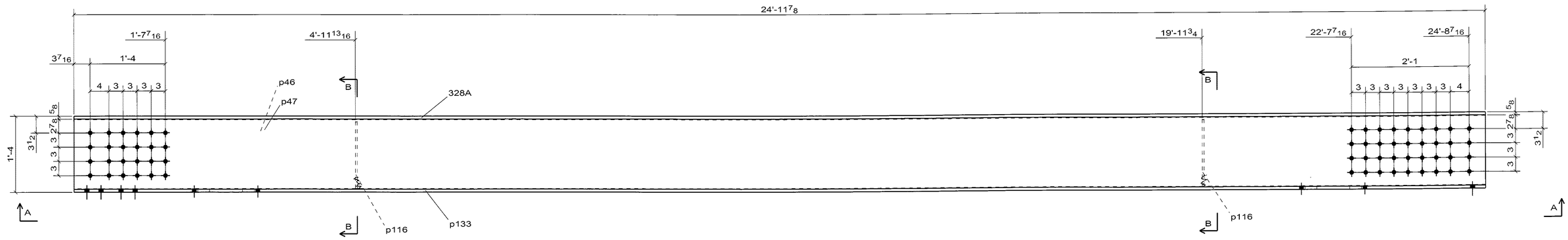

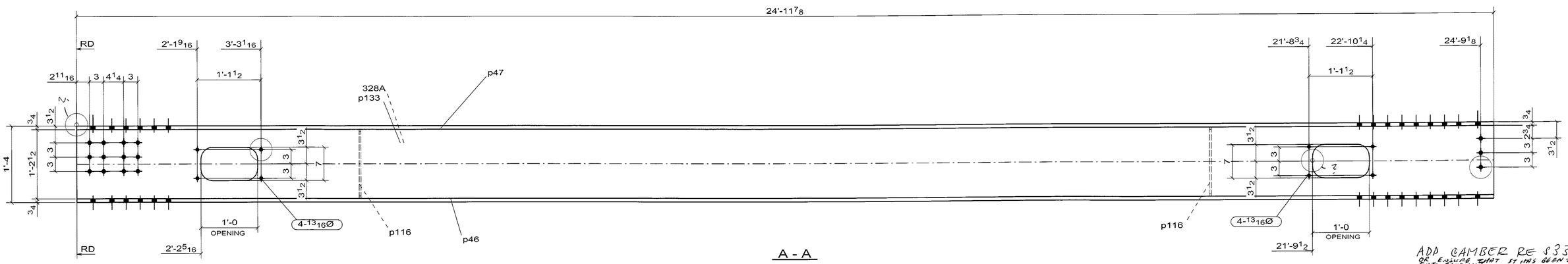

A - A
(BOTTOM VIEW)

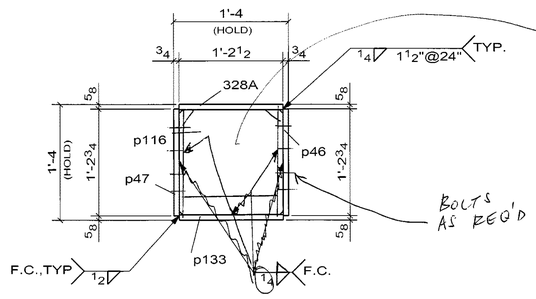

REVISE DIAPH. PL'S AS SHOWN ON 107A
SEE NOTE & SKETCH ON 107A

BOLTS AS REQ'D

B - B

1 - BOX_BM -328A

WELD NOTE FOR ANY ASSEMBLY REQUIRING TACK WELDS:
- ALL TACK WELDS ARE TO BE MADE IN THE WELD JOINT ONLY

ADD CAMBER PER S33
OR ENSURE THAT IT HAS BEEN TAKEN INTO ACCOUNT

☐ CONFORMS TO DESIGN CONCEPT
☐ CONFORMS TO DESIGN CONCEPT WITH REVISIONS AS SHOWN
☒ NON-CONFORMING--REVISE & RESUBMIT
THIS SHOP DRAWING HAS BEEN REVIEWED FOR GENERAL CONFORMANCE WITH DESIGN CONCEPT ONLY AND DOES NOT RELIEVE THE FABRICATOR/VENDOR OF RESPONSIBILITY FOR CONFORMANCE WITH DESIGN DRAWINGS AND SPECIFICATIONS ALL OF WHICH HAVE PRIORITY OVER THIS SHOP DRAWING.
By A.F. Date 10/13/06

I.IN & ASSOCIATES, INC.

CONTRACTOR NOTE:
THIS DRAWING IS BEING SUBMITTED FOR APPROVAL AS REQUIRED. VERIFY OR SUPPLY ALL QUANTITIES, ALL DIMENSIONS, ALL INFORMATION, & ALL CONFIGURATIONS.

PRINT RECORD

NO.	USE	DATE
	APPR.	
	APPR.	
	PURCH	
	FAB	
	FAB. OFFICE	
	Q.A.	
	DIST.	
	ERECT.	

OPEN HOLES 15/16 Ø U/N
WELD BRIDGE WELDING CODE: D1.5
STEEL AS NOTED
BOLTS
SURFACE PREP-SP
PAINT SEE SPECS
REF DRAWING E2

REV	DATE	DESCRIPTION
0	SEP/10/06	FOR APPROVAL

RAINIER WELDING

19020 NE 84TH STREET - REDMOND, WA 98053
(425) 868-1300 FAX (425) 868-8872
STEEL AND ALUMINUM FABRICATING

PROJECT TOLT BRIDGE No 1834A
THIS DRAWING INCLUDES
FOR SNOHOMISH COUNTY OFFICIAL
DRAWN DJ DATE 08/24/2006 CHK DSC DATE 09/10/2006 DWG NUMBER 2707 - 328A 0

PRO DRAFT INC. PD# 676 PH:(804)589-6425
DRAWINGS PREPARED ON 3D-Xsect File Name :- A (328-A)
Model Name: 725_102_TOLT_BRIDGE_541
Plot Date: 09/10/2006 12:15:39

No to SHIP	SHIP MARK	No PIECES	PIECE MARK	DESCRIPTION	LENGTH	UNIT WT.	GRADE	REMARKS
2	326A			FLOOR BEAM		9842		
		2	326A	W36X210	44'-6 1/16"	9361	AASHTO M 270 GR. 50	
		4	p99	PL1/2X13	1'-9 1/8"	39	AASHTO M 270 GR. 50	
		12	p100	FB1/2X11	0'-11"	17	AASHTO M 270 GR. 50	
		4	p101	PL1/2X17	1'-5"	41	AASHTO M 270 GR. 50	
		4	p157	L8 X5 X3/4	1'-9"	55	AASHTO M 270 GR. 50	
		4	p158	L8 X5 X3/4	1'-9"	55	AASHTO M 270 GR. 50	
		48	b1	7/8Ø A325 BOLT	3 3/4			

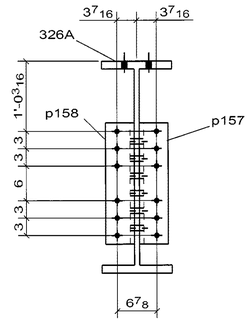

A - A

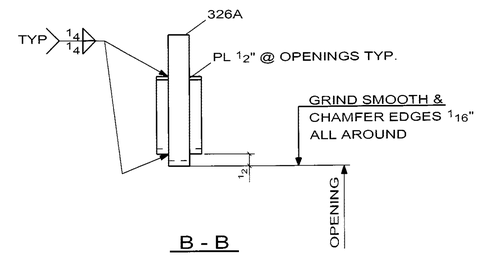

B - B
(TYP DET'L @ OPENINGS)

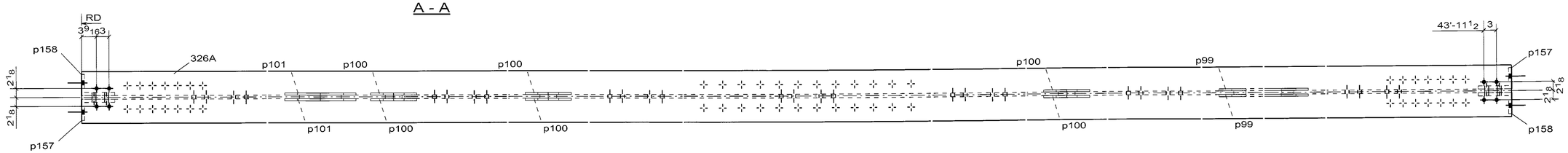

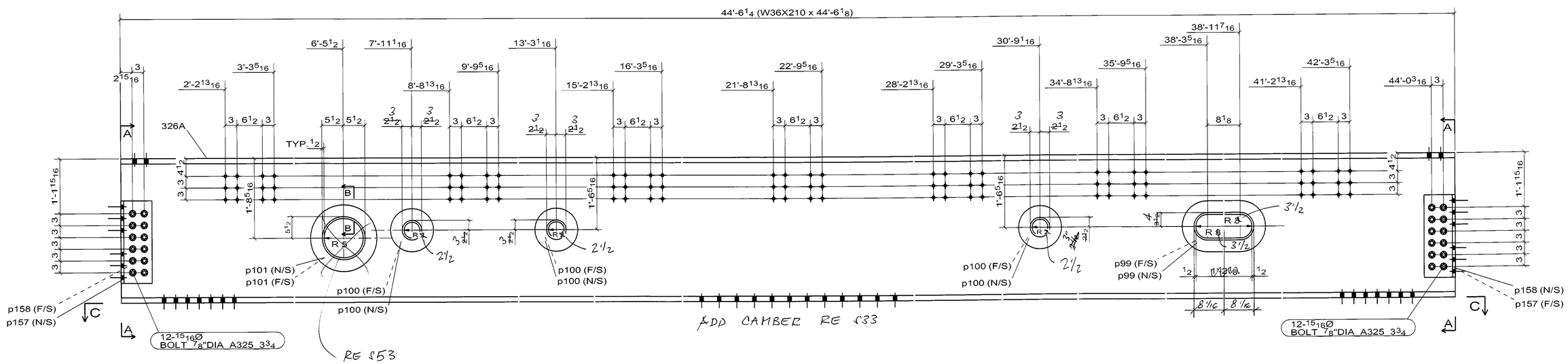

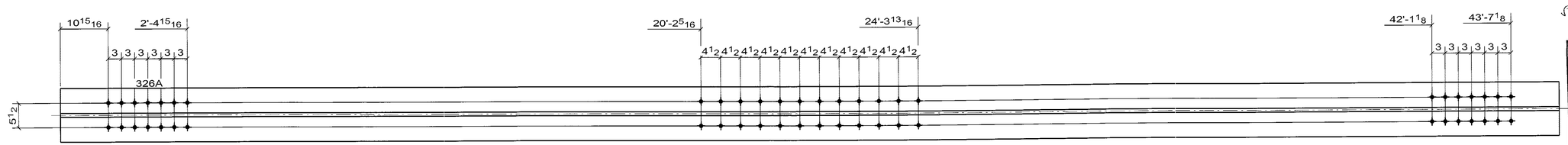

SEE NOTE 1 ON E1

C - C

☐ CONFORMS TO DESIGN CONCEPT
☐ CONFORMS TO DESIGN CONCEPT WITH REVISIONS AS SHOWN
☒ NON-CONFORMING–REVISE & RESUBMIT

THIS SHOP DRAWING HAS BEEN REVIEWED FOR GENERAL CONFORMANCE WITH DESIGN CONCEPT ONLY AND DOES NOT RELIEVE THE FABRICATOR/VENDOR OF RESPONSIBILITY FOR CONFORMANCE WITH DESIGN DRAWINGS AND SPECIFICATIONS ALL OF WHICH REMAIN PRIORITY OVER THIS SHOP DRAWING.

By A.F. 10/18/06

I.IN & ASSOCIATES, INC.

2 - FLOOR BEAM -326A

NOTE
- SEE 1SK FOR WELDED STUD LAYOUT

WELD NOTE FOR ANY ASSEMBLY REQUIRING TACK WELDS:
- ALL TACK WELDS ARE TO BE MADE IN THE WELD JOINT ONLY

CONTRACTOR NOTE:
THIS DRAWING IS BEING SUBMITTED FOR APPROVAL AS REQUIRED. VERIFY OR SUPPLY ALL QUANTITIES, ALL DIMENSIONS, ALL INFORMATION, & ALL CONFIGURATIONS.

PRINT RECORD

NO.	USE	DATE
	APPR.	
	APPR.	
	PURCH	
	FAB	
	FAB. OFFICE	
	Q.A.	
	DIST.	
	ERECT.	

OPEN HOLES 15/16 Ø U/N
WELD BRIDGE WELDING CODE: D1.5
STEEL AS NOTED
BOLTS
SURFACE PREP-SP
PAINT SEE SPECS
REF DRAWING E2, E3

REV	DATE	DESCRIPTION	VS.
0	SEP/10/06	FOR APPROVAL	

RAINIER WELDING

19020 NE 84TH STREET - REDMOND, WA 98053
(425) 868-1300 FAX (425) 868-8872
STEEL AND ALUMINUM FABRICATING

PROJECT: TOLT BRIDGE No 1834A
THIS DRAWING INCLUDES
FOR: SNOHOMISH COUNTY OFFICIAL
DRAWN: DJ DATE: 08/24/2006
CHK: DSC DATE: 09/10/2006
DWG NUMBER: 2707 - 326A 0

PRO DRAFT INC PD# 676 PH:(904)585-6425
DRAWINGS PREPARED ON 3D-X(xcc) File Name :- A [326-A]
Model Name: 725_102_TOLT_BRIDGE_541
Plot Date: 09/10/2006 12:15:36

No to SHIP	SHIP MARK	No PIECES	PIECE MARK	DESCRIPTION	LENGTH	UNIT WT.	GRADE	REMARKS
2	325A			FLOOR BEAM		9847		
		2	325A	W36X210	44'-6 1/16"	9361	AASHTO M 270 GR. 50	
		4	p99	PL1/2X13	1'-9 1/8"	39	AASHTO M 270 GR. 50	
		12	p100	FB1/2X11	0'-11"	17	AASHTO M 270 GR. 50	
		4	p101	PL1/2X17	1'-5"	41	AASHTO M 270 GR. 50	
		4	p155	L8 X5 X3/4	1'-9 1/2"	56	AASHTO M 270 GR. 50	
		4	p156	L8 X5 X3/4	1'-9 1/2"	56	AASHTO M 270 GR. 50	
		48	b1	7/8Ø A325 BOLT	3 3/4			

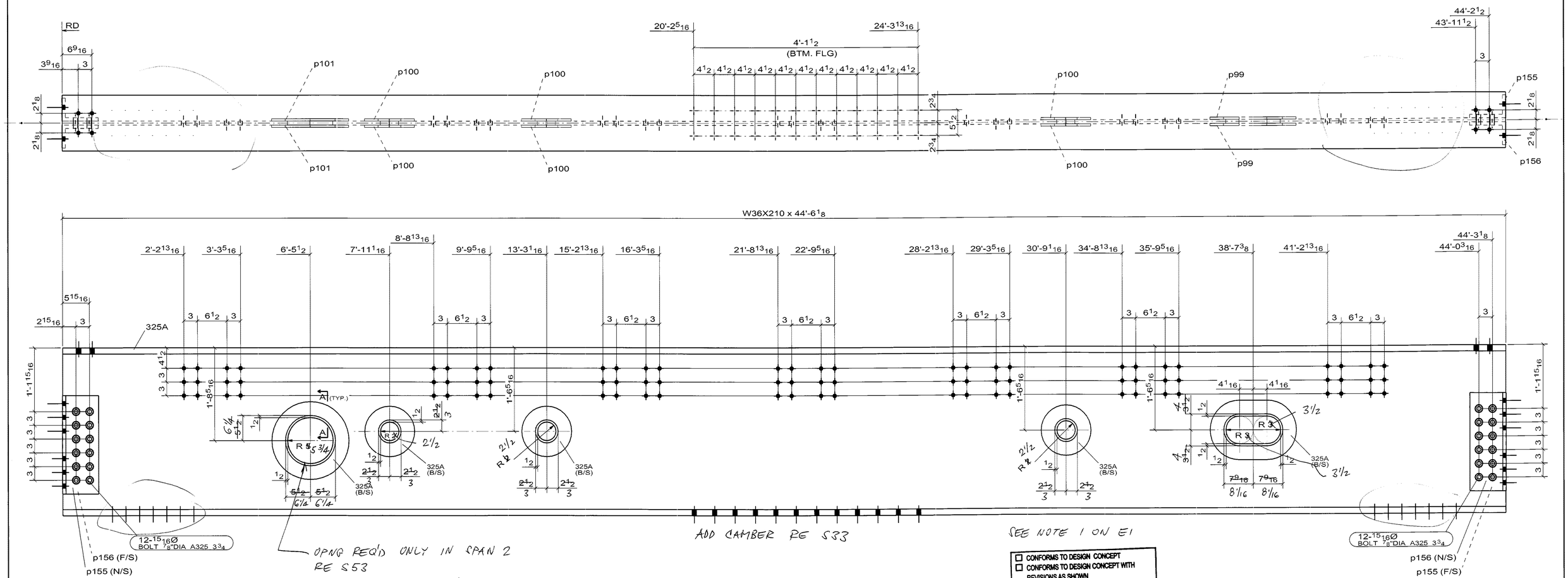

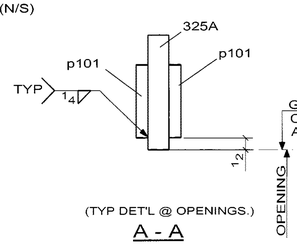

(TYP DET'L @ OPENINGS.)

A - A

SHOP NOTE:

-SEE 1SK FOR WELDED STUD DETAIL

2 - FLOOR BEAM -325A

WELD NOTE FOR ANY ASSEMBLY REQUIRING TACK WELDS:
- ALL TACK WELDS ARE TO BE MADE IN THE WELD JOINT ONLY

☐ CONFORMS TO DESIGN CONCEPT
☐ CONFORMS TO DESIGN CONCEPT WITH REVISIONS AS SHOWN
☒ NON-CONFORMING-REVISE & RESUBMIT
THIS SHOP DRAWING HAS BEEN REVIEWED FOR GENERAL CONFORMANCE WITH DESIGN CONCEPT ONLY AND DOES NOT RELIEVE THE FABRICATOR/VENDOR OF RESPONSIBILITY FOR CONFORMANCE WITH DESIGN DRAWINGS AND SPECIFICATIONS ALL OF WHICH HAVE PRIORITY OVER THIS SHOP DRAWING.
By A.F. Date 10/13/06
I.IN & ASSOCIATES, INC.

CONTRACTOR NOTE:
THIS DRAWING IS BEING SUBMITTED FOR APPROVAL AS REQUIRED. VERIFY OR SUPPLY ALL QUANTITIES, ALL DIMENSIONS, ALL INFORMATION, & ALL CONFIGURATIONS.

PRINT RECORD

NO.	USE	DATE
	APPR.	
	APPR.	
	PURCH	
	FAB	
	FAB. OFFICE	
	Q.A.	
	DIST.	
	ERECT.	

OPEN HOLES 15/16 Ø L/IN
WELD BRIDGE WELDING CODE: D1.5
STEEL AS NOTED
BOLTS
SURFACE PREP SP
PAINT SEE SPECS
REF DRAWING E2

REV	DATE	DESCRIPTION	VS
0	SEP/10/06	FOR APPROVAL	

RAINIER WELDING

19020 NE 84TH STREET - REDMOND, WA 98053
(425) 868-1300 FAX (425) 868-8872
STEEL AND ALUMINUM FABRICATING

PROJECT: TOLT BRIDGE No 1834A
THIS DRAWING INCLUDES:
FOR: SNOHOMISH COUNTY OFFICIAL
DRAWN: DJ DATE 08/28/2006 CHK: DSC DATE 09/10/2006
DWG NUMBER: 2707 - 325A 0

PRO DRAFT INC. PO# 676 PH (604)889-6426
DRAWINGS PREPARED ON: 3D-Xsect File Name :- A [325-A]
Model Name: 725_102_TOLT_BRIDGE_541
Plot Date: 09/10/2006 12:15:28

No to SHIP	SHIP MARK	No PIECES	PIECE MARK	DESCRIPTION	LENGTH	UNIT WT.	GRADE	REMARKS
2	301A			SS_COVER		69		BRUSHED FINISH
		2	301A	PL[redacted]21 13/16 X 11 GA.	3'-4"	28	A304	BEND
		2	p122	PL[redacted]21 13/16 X 11 GA.	3'-7 1/4"	31	A304	BEND
		2	p123	FB[redacted]11 X 11 GA.	0'-11"	4	A304	
		4	p124	ROD1/4	0'-3 3/8"	0	A304	BEND
		4	p125	[redacted] SS PIANO HINGE	0'-11"	0	A304	W / HOLES
		[redacted]						
		2	p136	FB[redacted]11 X 11 GA.	0'-11"	4	A304	

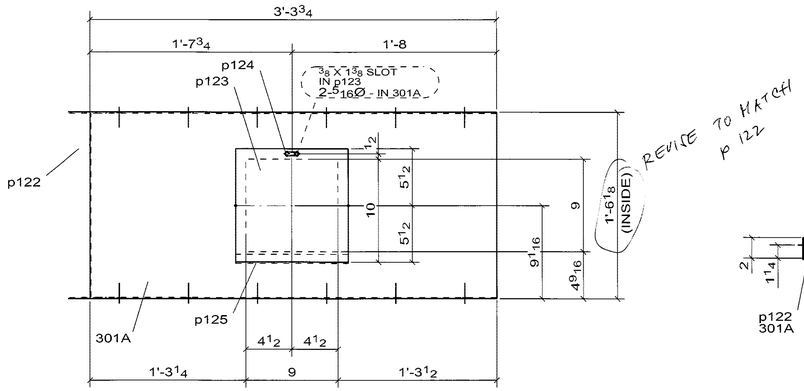

C - C

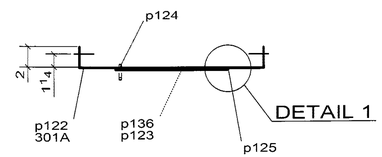

B - B

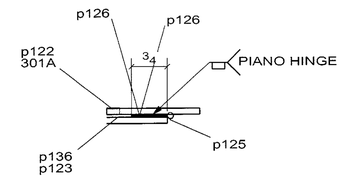

DETAIL 1

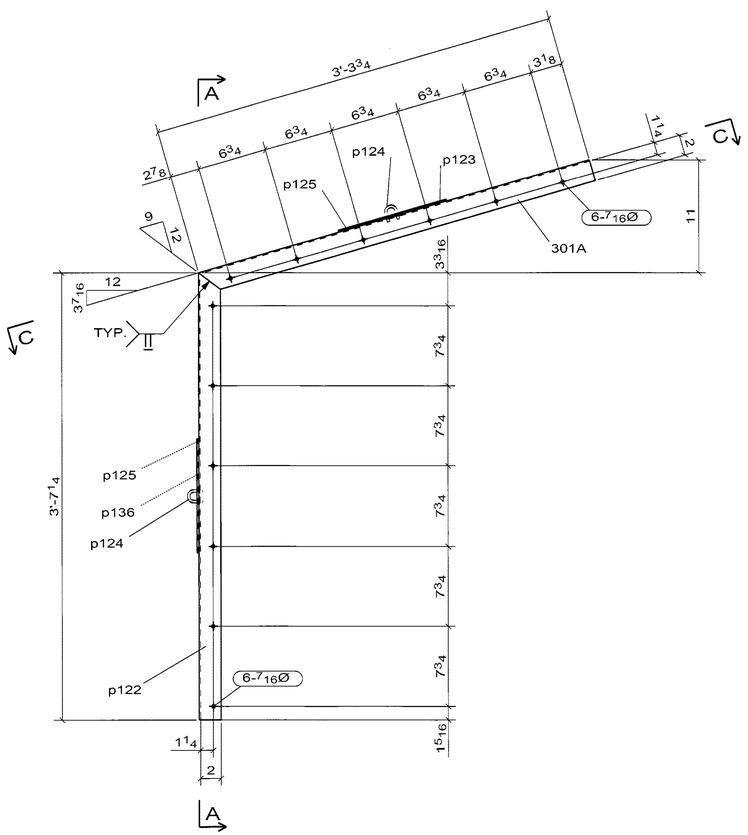

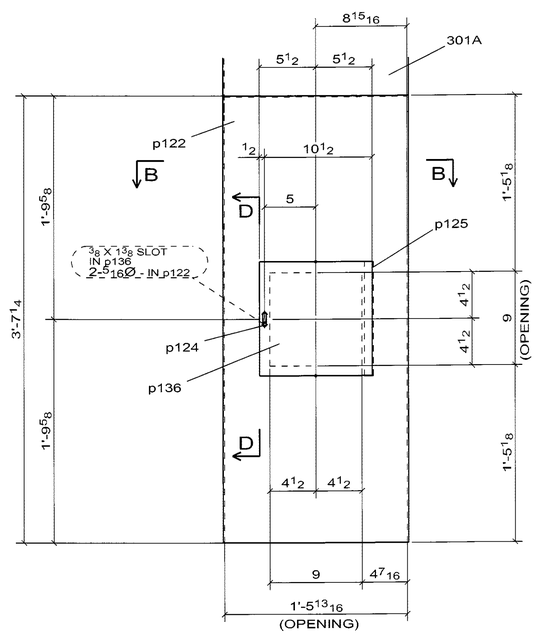

A - A

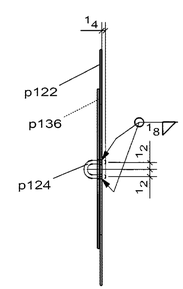

D - D

NOTE:

DEBURR EDGES

☐ CONFORMS TO DESIGN CONCEPT
☒ CONFORMS TO DESIGN CONCEPT WITH REVISIONS AS SHOWN
☐ NON-CONFORMING–REVISE & RESUBMIT

THIS SHOP DRAWING HAS BEEN REVIEWED FOR GENERAL CONFORMANCE WITH DESIGN CONCEPT ONLY AND DOES NOT RELIEVE THE FABRICATOR/VENDOR OF RESPONSIBILITY FOR CONFORMANCE WITH DESIGN DRAWINGS AND SPECIFICATIONS ALL OF WHICH HAVE PRIORITY OVER THIS SHOP DRAWING.

By A.F. Date 10/13/06

I.IN & ASSOCIATES, INC.

2 - SS_COVER -301A

WELD NOTE FOR ANY ASSEMBLY REQUIRING TACK WELDS:
- ALL TACK WELDS ARE TO BE MADE IN THE WELD JOINT ONLY

CONTRACTOR NOTE:
THIS DRAWING IS BEING SUBMITTED FOR APPROVAL AS REQUIRED. VERIFY OR SUPPLY ALL QUANTITIES, ALL DIMENSIONS, ALL INFORMATION, & ALL CONFIGURATIONS.

PRINT RECORD

NO.	USE	DATE
	APPR.	
	APPR.	
	PURCH	
	FAB	
	FAB. OFFICE	
	Q.A.	
	DIST.	
	ERECT.	

OPEN HOLES: 15/16 Ø U/N
WELD: BRIDGE WELDING CODE: D1.5
STEEL: AS NOTED
BOLTS:
SURFACE PREP: SP
PAINT: SEE SPECS
REF DRAWING: E5, E9

REV	DATE	DESCRIPTION
0	SEP/10/06	FOR APPROVAL

RAINIER WELDING

19020 NE 84TH STREET - REDMOND, WA 98053
(425) 868-1300 FAX (425) 868-8872
STEEL AND ALUMINUM FABRICATING

PROJECT: TOLT BRIDGE No 1834A
THIS DRAWING INCLUDES:
FOR: SNOHOMISH COUNTY OFFICIAL
DRAWN: DATE 08/29/2006
CHK: DATE 09/10/2006
DWG NUMBER: 2707 - 301A

PRO DRAFT INC. PO# 676 PH:(604)669-5425
DRAWINGS PREPARED ON 3D-Xsteel File Name :- A (301.A)
Model Name: 725_102_TOLT_BRIDGE_541
Plot Date: 09/10/2006 12:15:24

No to SHIP	SHIP MARK	No PIECES	PIECE MARK	DESCRIPTION	LENGTH	UNIT WT.	GRADE	REMARKS
1	300A			SS_COVER		69		BRUSHED FINISH
		1	300A	PL[redacted]21 13/16 X 11 GA.	3'-4"	28	A304	BEND
		1	p121	PL[redacted]21 13/16 X 11 GA.	3'-7 1/4"	31	A304	BEND
		1	p123	FB[redacted]11 X 11 GA.	0'-11"	4	A304	
		2	p124	ROD1/4	0'-3 3/6"	0	A304	BEND
		2	p125	[redacted] SS PIANO HINGE	0'-11"	0	A304	W / HOLES
		[redacted]						
		1	p136	FB[redacted]11 X 11 GA.	0'-11"	4	A304	

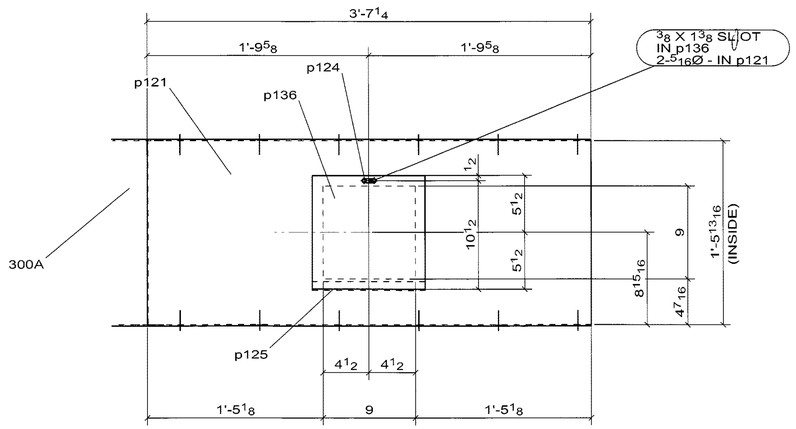

C - C

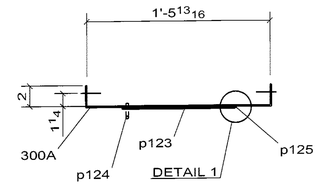

B - B

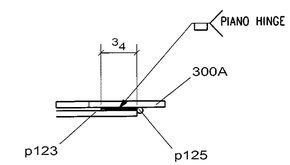

DETAIL 1

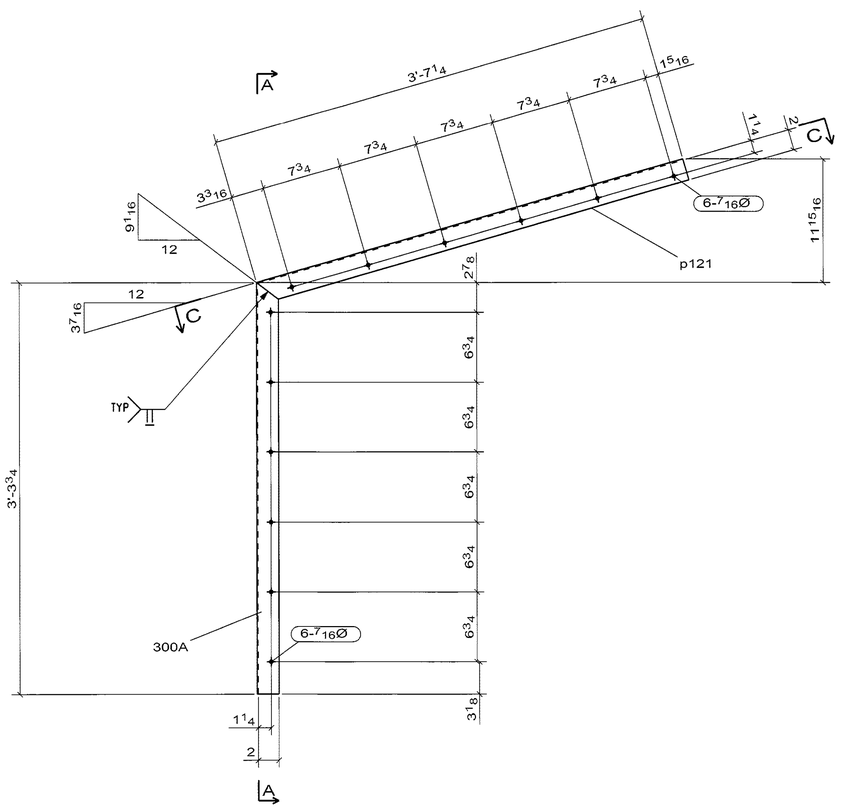

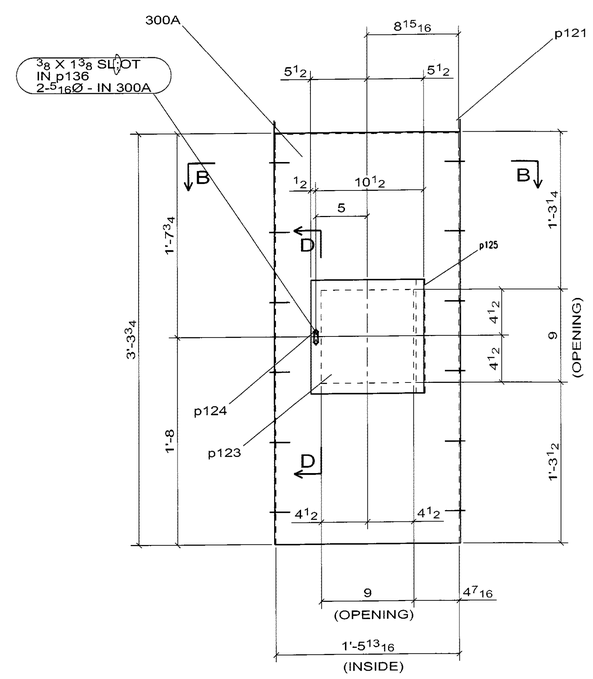

A - A

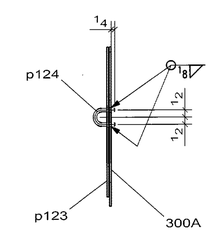

D - D

NOTE

DEBURR EDGES

☒ CONFORMS TO DESIGN CONCEPT
☐ CONFORMS TO DESIGN CONCEPT WITH REVISIONS AS SHOWN
☐ NON-CONFORMING–REVISE & RESUBMIT

THIS SHOP DRAWING HAS BEEN REVIEWED FOR GENERAL CONFORMANCE WITH DESIGN CONCEPT ONLY AND DOES NOT RELIEVE THE FABRICATOR/VENDOR OF RESPONSIBILITY FOR CONFORMANCE WITH DESIGN DRAWINGS AND SPECIFICATIONS ALL OF WHICH HAVE PRIORITY OVER THIS SHOP DRAWING.

By A. F. Date 10/13/06

LIN & ASSOCIATES, INC.

1 - SS_COVER -300A

WELD NOTE FOR ANY ASSEMBLY REQUIRING TACK WELDS:
- ALL TACK WELDS ARE TO BE MADE IN THE WELD JOINT ONLY

CONTRACTOR NOTE:
THIS DRAWING IS BEING SUBMITTED FOR APPROVAL AS REQUIRED. VERIFY OR SUPPLY ALL QUANTITIES, ALL DIMENSIONS, ALL INFORMATION, & ALL CONFIGURATIONS.

PRINT RECORD

NO.	USE	DATE
	APPR.	
	APPR.	
	PURCH	
	FAB	
	FAB. OFFICE	
	Q.A.	
	DIST.	
	ERECT.	

OPEN HOLES: 15/16 Ø U/N
WELD: BRIDGE WELDING CODE: D1.5
STEEL: AS NOTED
BOLTS:
SURFACE PREP-SP
PAINT: SEE SPECS
REF DRAWING: E7, E8

REV	DATE	DESCRIPTION	V.S.
0	SEP/10/06	FOR APPROVAL	

RAINIER WELDING
19020 NE 84TH STREET - REDMOND, WA 98053
(425) 868-1300 FAX (425) 868-8872
STEEL AND ALUMINUM FABRICATING

PROJECT: TOLT BRIDGE No 1834A
THIS DRAWING INCLUDES
FOR: SNOHOMISH COUNTY OFFICIAL
DRAWN: DJ DATE: 07/31/2006 CHK: DSC DATE: 09/10/2006 DWG NUMBER: 2707 - 300A

PRO DRAFT INC. PO# 676 PH:(604)599-5425
DRAWINGS PREPARED ON 3D-Xsicol File Name :- A [300.A]
Model Name: 725_102_TOLT_BRIDGE_541
Plot Date: 09/10/2006 12:15:23

No to SHIP	SHIP MARK	No PIECES	PIECE MARK	DESCRIPTION	LENGTH	UNIT WT.	GRADE	REMARKS
2	288A			BOX_BM		2541		
		2	288A	PL3/8X22 15/16 BEND	44'-6 1/2"	1254	AASHTO M 270 GR. 50	
		2	p111	PL3/8X22 15/16 BEND	44'-6 1/2"	1287	AASHTO M 270 GR. 50	

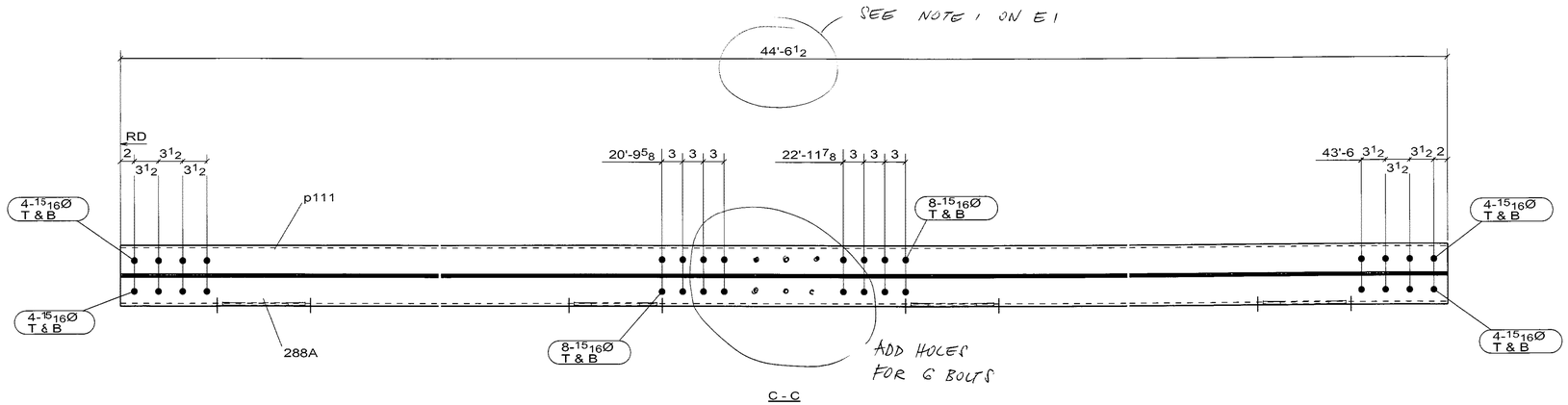

C - C

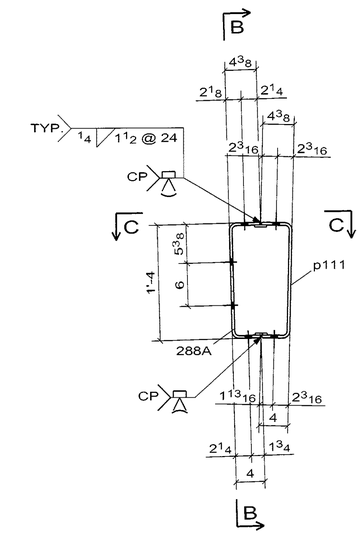

A - A

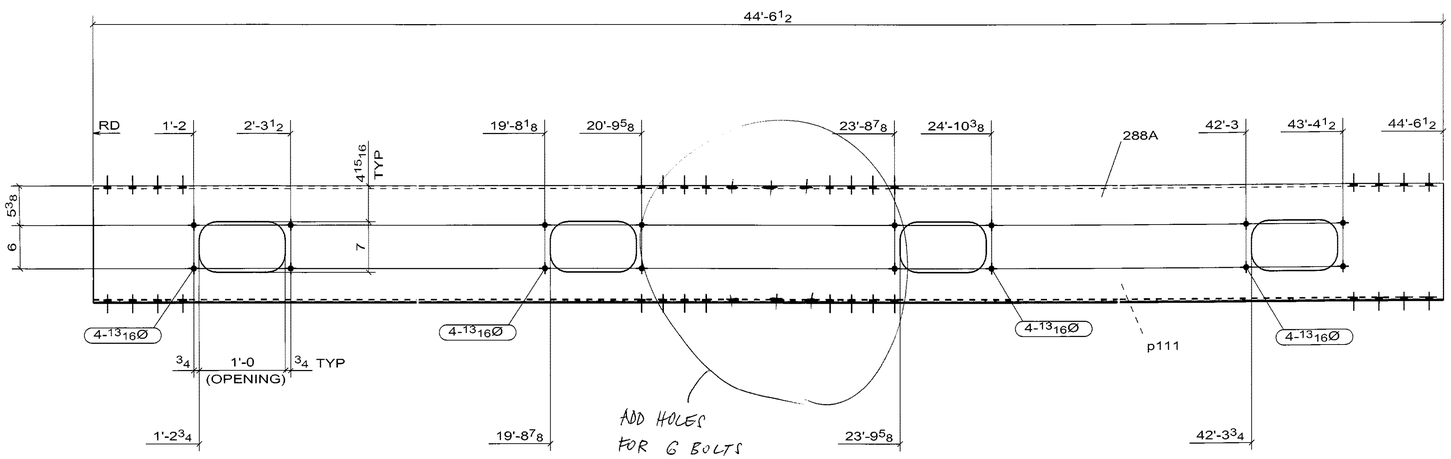

B - B

☐ CONFORMS TO DESIGN CONCEPT
☒ CONFORMS TO DESIGN CONCEPT WITH REVISIONS AS SHOWN
☐ NON-CONFORMING–REVISE & RESUBMIT

THIS SHOP DRAWING HAS BEEN REVIEWED FOR GENERAL CONFORMANCE WITH DESIGN CONCEPT. ONLY AND DOES NOT RELIEVE THE FABRICATOR/VENDOR OF RESPONSIBILITY FOR CONFORMANCE WITH DESIGN DRAWINGS AND SPECIFICATIONS ALL OF WHICH HAVE PRIORITY OVER THIS DESIGN DRAWING.

By A.F. Date 10/13/06

I.IN & ASSOCIATES, INC.

2 - BOX_BM -288A

WELD NOTE FOR ANY ASSEMBLY REQUIRING TACK WELDS:
- ALL TACK WELDS ARE TO BE MADE IN THE WELD JOINT ONLY

CONTRACTOR NOTE:
THIS DRAWING IS BEING SUBMITTED FOR APPROVAL AS REQUIRED. VERIFY OR SUPPLY ALL QUANTITIES, ALL DIMENSIONS, ALL INFORMATION, & ALL CONFIGURATIONS.

PRINT RECORD

NO.	USE	DATE
	APPR.	
	APPR.	
	PURCH	
	FAB	
	FAB. OFFICE	
	Q.A.	
	DIST.	
	ERECT.	

OPEN HOLES 15/16 Ø U/N
WELD BRIDGE WELDING CODE: D1.5
STEEL AS NOTED
BOLTS
SURFACE PREP-SP
PAINT SEE SPECS
REF DRAWING E4, E5

REV	DATE	DESCRIPTION	
0	SEP/10/06	FOR APPROVAL	VS

RAINIER WELDING

19020 NE 84TH STREET - REDMOND, WA 98053
(425) 868-1300 FAX (425) 868-8872
STEEL AND ALUMINUM FABRICATING

PROJECT: TOLT BRIDGE No 1834A
THIS DRAWING INCLUDES
FOR: SNOHOMISH COUNTY OFFICIAL

DRAWN DJ DATE 07/31/2006 CHK DSC DATE 08/10/2006 DWG NUMBER 2707 - 288A 0

PRO DRAFT INC. PO# 676 PH:(604)589-6425
DRAWINGS PREPARED ON 3D-Xacct File Name :- A [288.A]
Model Name: 725_102_TOLT_BRIDGE_541
Plot Date: 09/10/2006 12:17:24

No to SHIP	SHIP MARK	No PIECES	PIECE MARK	DESCRIPTION	LENGTH	UNIT WT.	GRADE	REMARKS
1	287A			BOX_BM		2541		
		1	287A	PL3/8X22 15/16 BEND	44'-6 1/2"	1254	AASHTO M 270 GR. 50	
		1	p110	PL3/8X22 15/16 BEND	44'-6 1/2"	1287	AASHTO M 270 GR. 50	

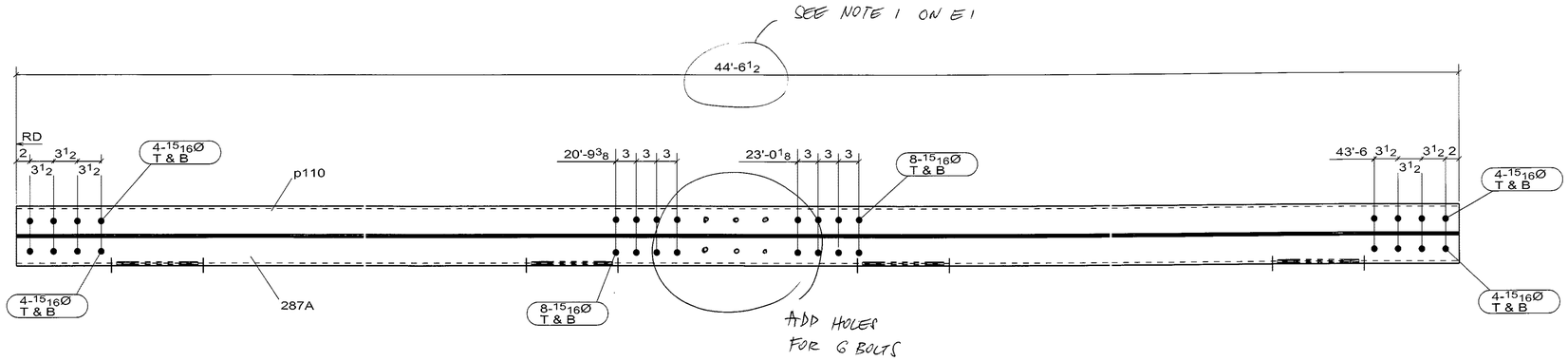

C - C

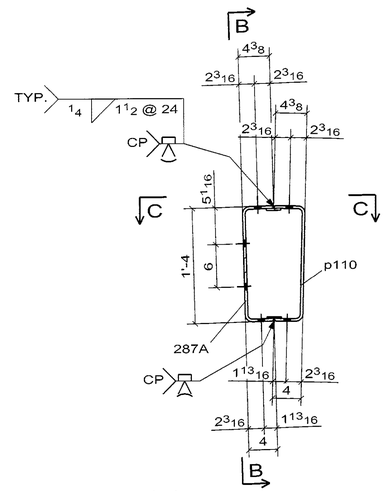

A - A

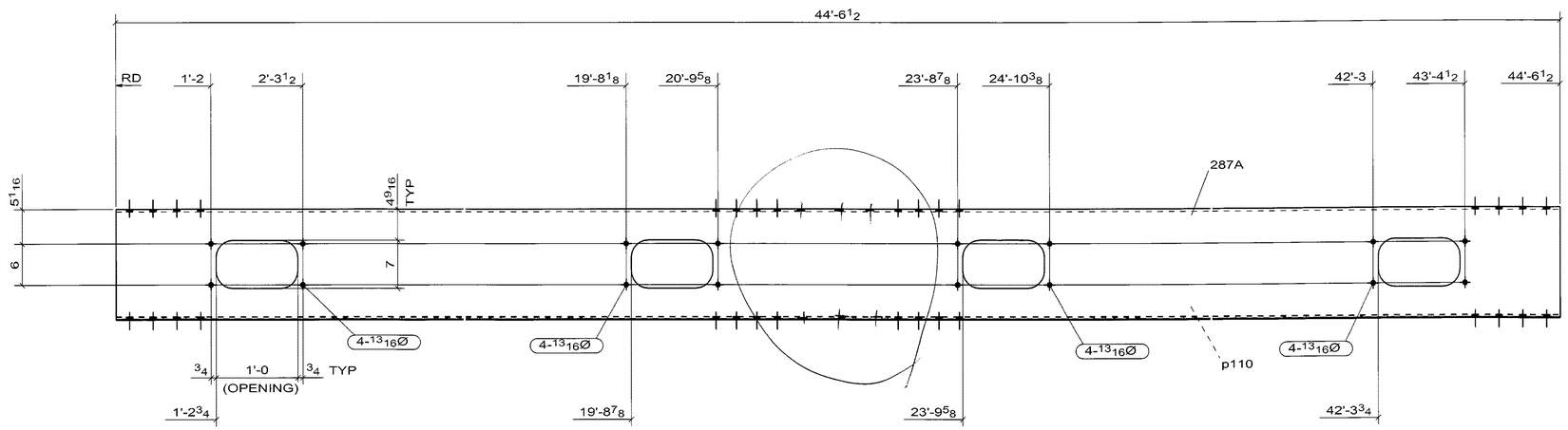

B - B

☐ CONFORMS TO DESIGN CONCEPT
☒ CONFORMS TO DESIGN CONCEPT WITH REVISIONS AS SHOWN
☐ NON-CONFORMING–REVISE & RESUBMIT

THIS SHOP DRAWING HAS BEEN REVIEWED FOR GENERAL CONFORMANCE WITH DESIGN CONCEPT ONLY AND DOES NOT RELIEVE THE FABRICATOR/VENDOR OF RESPONSIBILITY FOR CONFORMANCE WITH DESIGN DRAWINGS AND SPECIFICATIONS ALL OF WHICH HAVE PRIORITY OVER THIS SHOP DRAWING.

By A. F. Date 10/13/06

I.IN & ASSOCIATES, INC.

1 - BOX_BM -287A

WELD NOTE FOR ANY ASSEMBLY REQUIRING TACK WELDS:
- ALL TACK WELDS ARE TO BE MADE IN THE WELD JOINT ONLY

CONTRACTOR NOTE:
THIS DRAWING IS BEING SUBMITTED FOR APPROVAL AS REQUIRED. VERIFY OR SUPPLY ALL QUANTITIES, ALL DIMENSIONS, ALL INFORMATION, & ALL CONFIGURATIONS.

PRINT RECORD

NO.	USE	DATE
	APPR.	
	APPR.	
	PURCH	
	FAB	
	FAB. OFFICE	
	Q.A.	
	DIST.	
	ERECT.	

OPEN HOLES: 15/16 Ø U/N
FIELD: BRIDGE WELDING CODE: D1.5
STEEL: AS NOTED
BOLTS:
SURFACE PREP-SP:
PAINT: SEE SPECS
REF DRAWING: E4, E5

REV	DATE	DESCRIPTION	VS
0	SEP/10/06	FOR APPROVAL	

RAINIER WELDING

19020 NE 84TH STREET - REDMOND, WA 98053
(425) 868-1300 FAX (425) 868-8872
STEEL AND ALUMINUM FABRICATING

PROJECT: TOLT BRIDGE No 1834A
THIS DRAWING INCLUDES:
FOR: SNOHOMISH COUNTY OFFICIAL
DRAWN: DJ DATE 07/31/2006
CHK: DSC DATE 09/10/2006
DWG NUMBER: 2707 - 287A 0

PRO DRAFT INC. PD# 676 PH:(604)589-6425
DRAWINGS PREPARED ON 3D-Xacel File Name :- A [287.A]
Model Name: 725_102_TOLT_BRIDGE_541
Plot Date: 09/10/2006 12:17:21

No to SHIP	SHIP MARK	No. PIECES	PIECE MARK	DESCRIPTION	LENGTH	UNIT WT.	GRADE	REMARKS
2	286A			BOX_BM		2541		
		2	286A	PL3/8X22 15/16 BEND	44'-6 1/2"	1254	AASHTO M 270 GR. 50	
		2	p112	PL3/8X22 15/16 BEND	44'-6 1/2"	1287	AASHTO M 270 GR. 50	

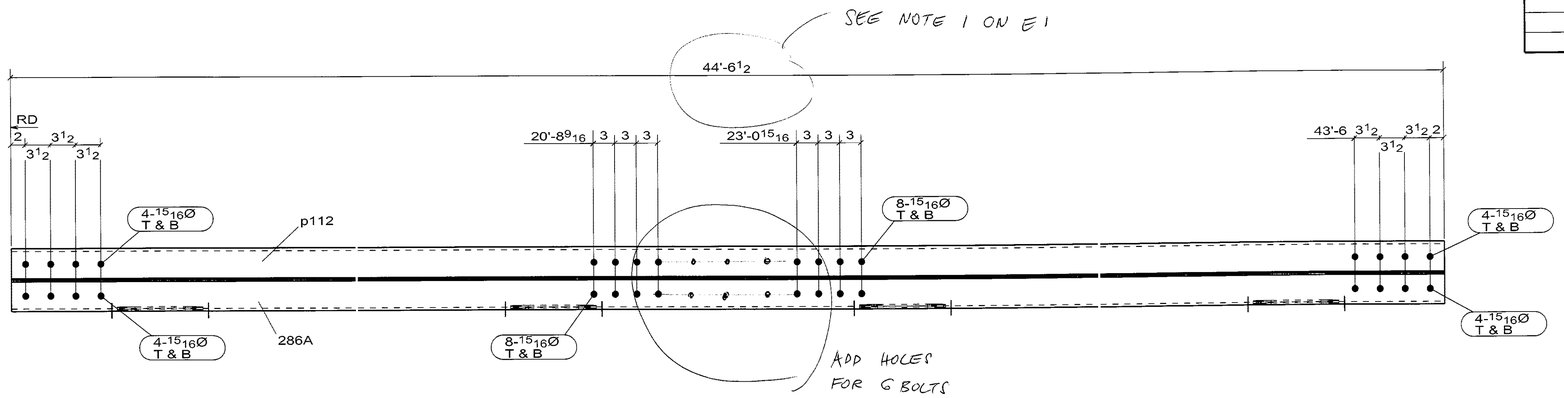

B - B

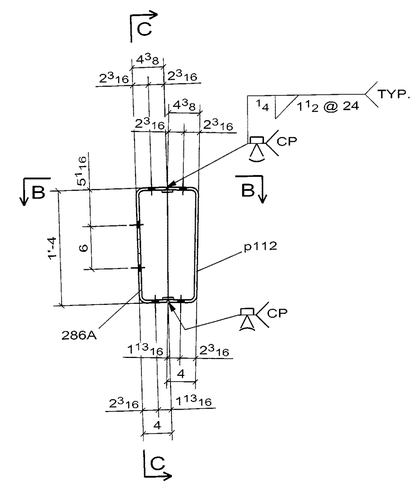

A - A

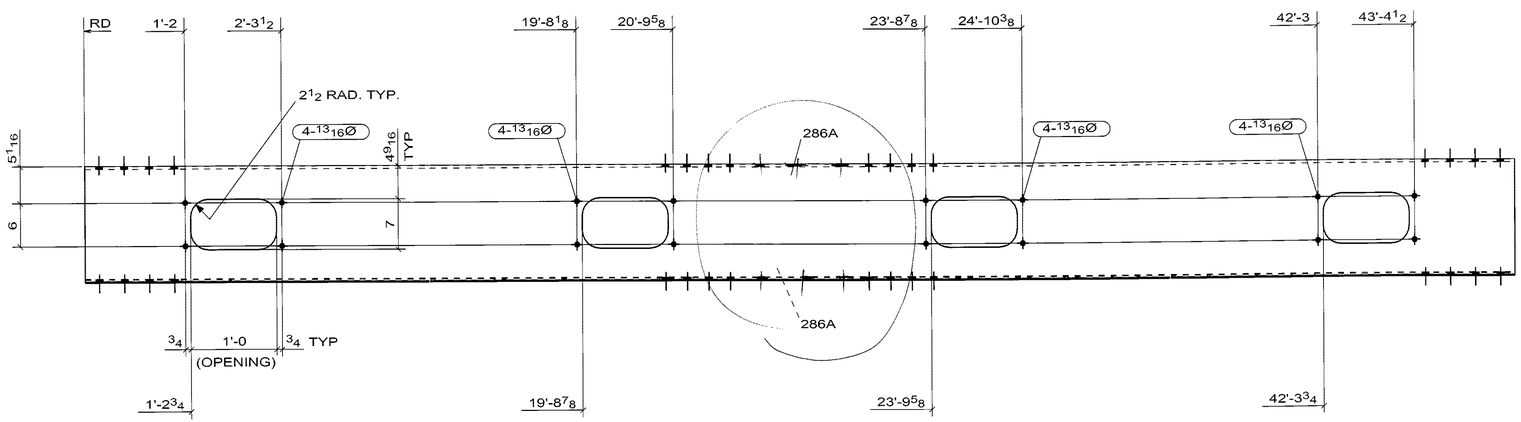

C - C

2 - BOX_BM -286A

☐ CONFORMS TO DESIGN CONCEPT
☒ CONFORMS TO DESIGN CONCEPT WITH REVISIONS AS SHOWN
☐ NON-CONFORMING–REVISE & RESUBMIT

THIS SHOP DRAWING HAS BEEN REVIEWED FOR GENERAL CONFORMANCE WITH DESIGN CONCEPT ONLY AND DOES NOT RELIEVE THE FABRICATOR/VENDOR OF RESPONSIBILITY FOR CONFORMANCE WITH DESIGN DRAWINGS AND SPECIFICATIONS ALL OF WHICH HAVE PRIORITY OVER THIS SHOP DRAWING.

By A.F. 10/13/06

LIN & ASSOCIATES, INC.

CONTRACTOR NOTE:
THIS DRAWING IS BEING SUBMITTED FOR APPROVAL AS REQUIRED. VERIFY OR SUPPLY ALL QUANTITIES, ALL DIMENSIONS, ALL INFORMATION, & ALL CONFIGURATIONS.

PRINT RECORD

NO.	USE	DATE
	APPR.	
	APPR.	
	PURCH	
	FAB	
	FAB. OFFICE	
	Q.A.	
	DIST.	
	ERECT.	

OPEN HOLES 15/16 Ø UIN
WELD BRIDGE WELDING CODE: D1.5
STEEL AS NOTED
BOLTS
SURFACE PREP-SP
PAINT SEE SPECS
REF.DRAWING E4, E5

REV	DATE	DESCRIPTION	VS
0	SEP/10/06	FOR APPROVAL	

RAINIER WELDING

19020 NE 84TH STREET - REDMOND, WA 98053
(425) 868-1300 FAX (425) 868-8872
STEEL AND ALUMINUM FABRICATING

PROJECT TOLT BRIDGE No 1834A
THIS DRAWING INCLUDES
FOR SNOHOMISH COUNTY OFFICIAL
DRAWN DJ DATE 07/31/2006
CHK DSC DATE 09/10/2006
DWG NUMBER 2707 - 286A 0

WELD NOTE FOR ANY ASSEMBLY REQUIRING TACK WELDS:
- ALL TACK WELDS ARE TO BE MADE IN THE WELD JOINT ONLY

PRO DRAFT INC. PD# 676 PH:(604)589-6425
DRAWINGS PREPARED ON 3D-X.sect File Name :- A [286.A]
Model Name: 725_102_TOLT_BRIDGE_541
Plot Date: 09/10/2006 12:17:19