PRO DRAFT INC. PDI# 676 : PH:(604)589-6425
DRAWINGS PREPARED ON 3D-Xsteel File Name :- A [101.A]
Model Name: 725_102_TOLT_BRIDGE_541
Plot Date: 09/10/2006 12:19:05

☐ CONFORMS TO DESIGN CONCEPT
☐ CONFORMS TO DESIGN CONCEPT WITH REVISIONS AS SHOWN
☒ NON-CONFORMING–REVISE & RESUBMIT
THIS SHOP DRAWING HAS BEEN REVIEWED FOR GENERAL CONFORMANCE WITH DESIGN CONCEPT ONLY AND DOES NOT RELIEVE THE FABRICATOR/VENDOR OF RESPONSIBILITY FOR CONFORMANCE WITH DESIGN DRAWINGS AND SPECIFICATIONS ALL OF WHICH HAVE PRIORITY OVER THIS SHOP DRAWING.
By A.F. Date 10/13/06
LIN & ASSOCIATES, INC.

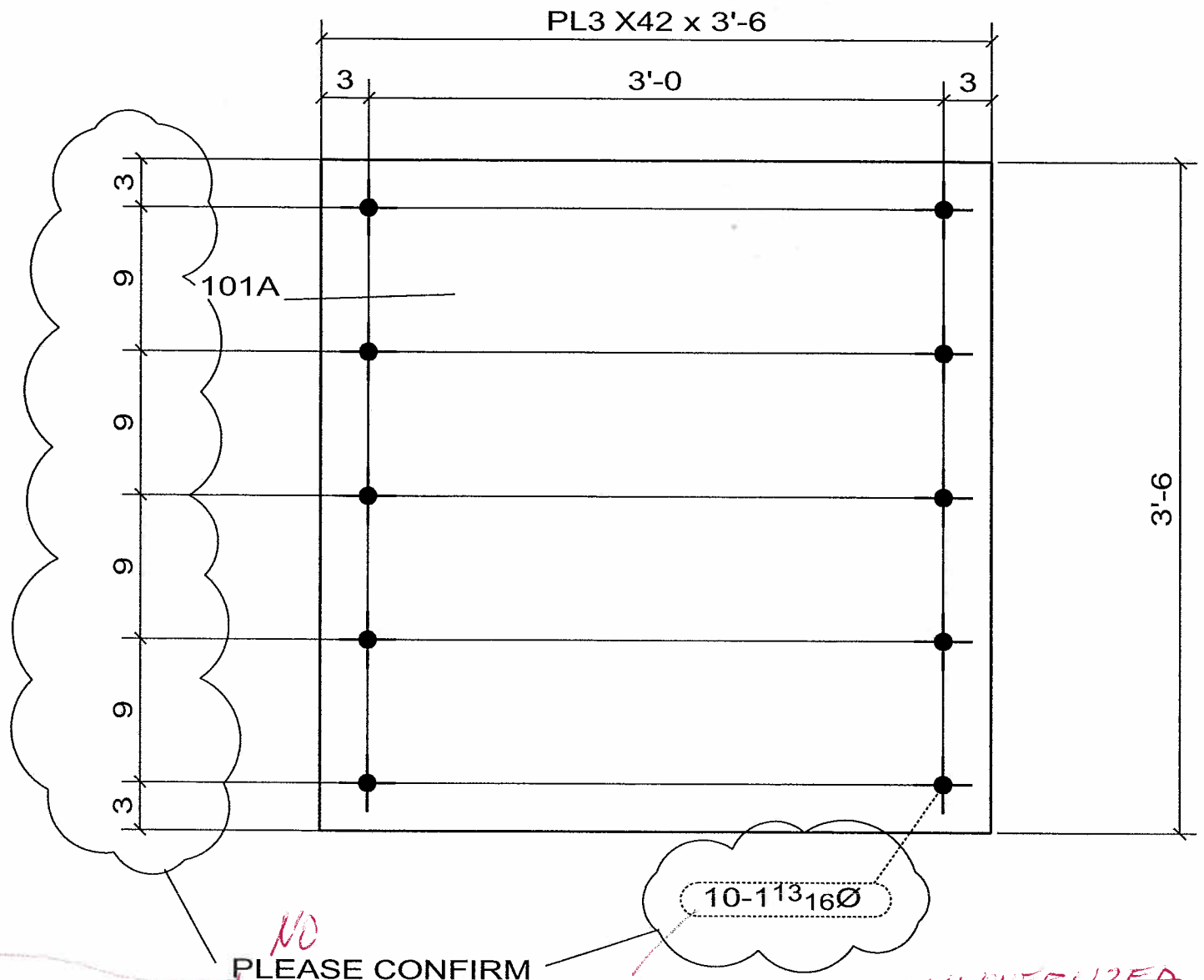

WELD NOTE FOR ANY ASSEMBLY REQUIRING TACK WELDS:
- ALL TACK WELDS ARE TO BE MADE IN THE WELD JOINT ONLY

(FIXED BEARING)

2 - MASONRY_PL -101A

No to SHIP	SHIP MARK	No PIECES	PIECE MARKS	DESCRIPTION	LENGTH	GRADE	REMARKS	WEIGHT	ADVANCE BILL
2	101A			MASONRY_PL				1501	
		2	101A	PL3 X42	3'-6"	AASHTO M 270 GR. 50		1501	

CONTRACTOR NOTE:
THIS DRAWING IS BEING SUBMITTED FOR APPROVAL AS REQUIRED. VERIFY OR SUPPLY ALL QUANTITIES, ALL DIMENSIONS, ALL INFORMATION, & ALL CONFIGURATIONS.

PRINT RECORD

NO.	USE	DATE
	APPR.	
	APPR.	
	PURCH	
	FAB	
	FAB. OFFICE	
	Q.A.	
	DIST.	
	ERECT.	

OPEN HOLES: 15/16 Ø U/N
WELD: BRIDGE WELDING CODE: D1.5
STEEL: AS NOTED
BOLTS:
SURFACE PREP-SP:
PAINT: SEE SPECS
REF.DRAWING: E3

REV	DATE	DESCRIPTION	
0	SEP/10/06	FOR APPROVAL	VS

RAINIER WELDING

19020 NE 84TH STREET - REDMOND, WA 98053
(425) 868-1300 FAX (425) 868-8872
STEEL AND ALUMINUM FABRICATING

PROJECT: TOLT BRIDGE No 1834A
THIS DRAWING INCLUDES:
FOR: SNOHOMISH COUNTY OFFICIAL

DRAWN DJ DATE 07/31/2006 | CHK DSC DATE 09/10/2006 | DWG NUMBER 2707 - 101A | 0

PRO DRAFT INC. PDI# 676 : PH:(604)589-6425
DRAWINGS PREPARED ON 3D-Xsteel File Name :- A [102.A]
Model Name: 725_102_TOLT_BRIDGE_541
Plot Date: 09/10/2006 12:19:06

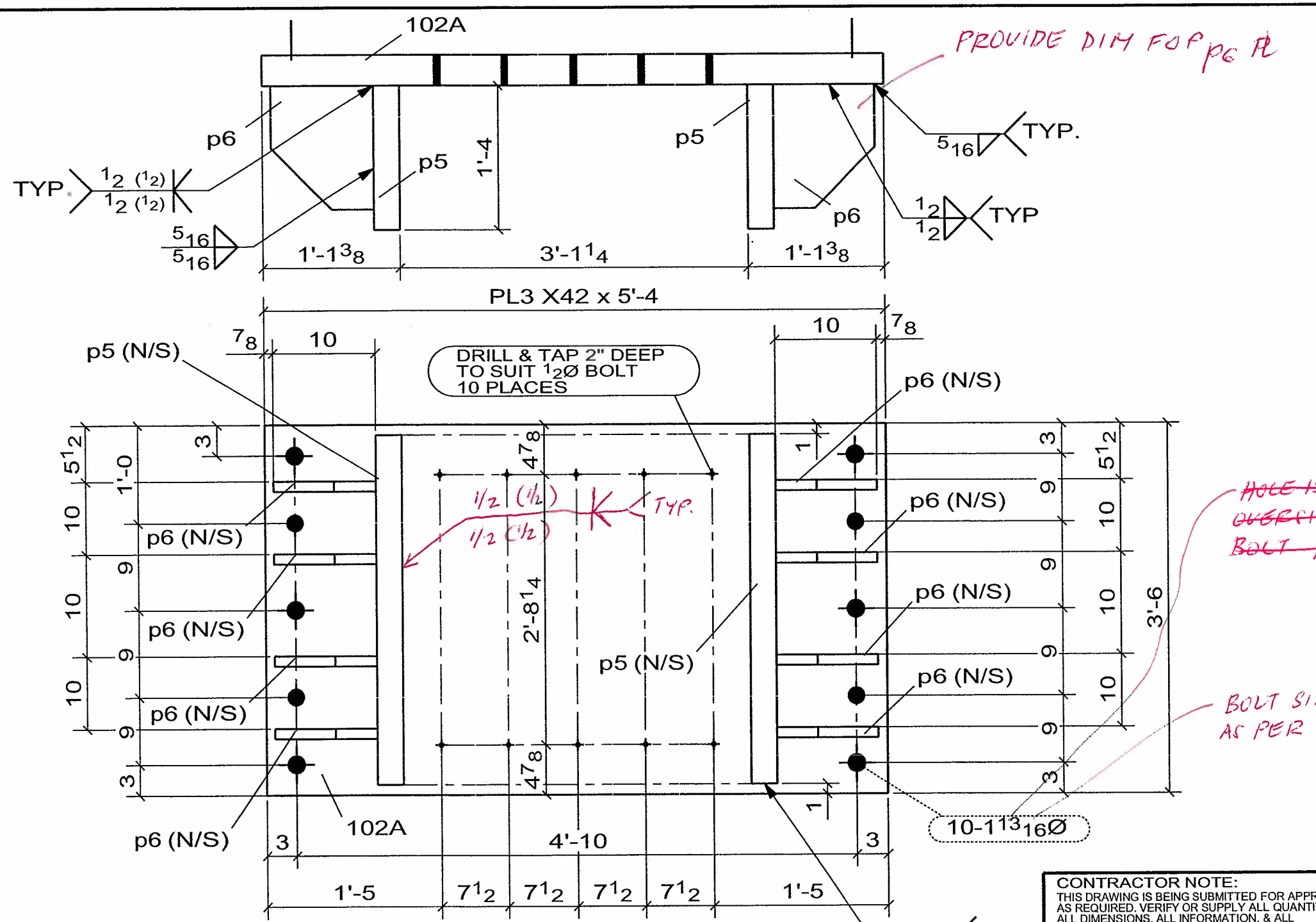

(EXP. BRG)

2 - MASONRY_PL -102A

HOLE IS TOO MUCH OVERSIZED FOR BOLT 1 1/2" OK- A. FURTADO

☐ CONFORMS TO DESIGN CONCEPT
☐ CONFORMS TO DESIGN CONCEPT WITH REVISIONS AS SHOWN
☒ NON-CONFORMING-REVISE & RESUBMIT

THIS SHOP DRAWING HAS BEEN REVIEWED FOR GENERAL CONFORMANCE WITH DESIGN CONCEPT ONLY AND DOES NOT RELIEVE THE FABRICATOR/VENDOR OF RESPONSIBLITY FOR CONFORMANCE WITH DESIGN DRAWINGS AND SPECIFICATIONS ALL OF WHICH HAVE PRIORITY OVER THIS SHOP DRAWING.

By AF Date 10/13/06

LIN & ASSOCIATES, INC.

WELD NOTE FOR ANY ASSEMBLY REQUIRING TACK WELDS:
- ALL TACK WELDS ARE TO BE MADE IN THE WELD JOINT ONLY

No to SHIP	SHIP MARK	No PIECES	PIECE MARKS	DESCRIPTION	LENGTH	GRADE	REMARKS	WEIGHT	ADVANCE BILL
2	102A			MASONRY_PL				3512	
		2	102A	PL3 X42	5'-4"	AASHTO M 270 GR. 50		2287	
		4	p5	PL2 1/2X16	3'-4"	AASHTO M 270 GR. 50		454	
		16	p6	FB1 X10	1'-2"	AASHTO M 270 GR. 50		40	

CONTRACTOR NOTE:
THIS DRAWING IS BEING SUBMITTED FOR APPROVAL AS REQUIRED. VERIFY OR SUPPLY ALL QUANTITIES, ALL DIMENSIONS, ALL INFORMATION, & ALL CONFIGURATIONS.

PRINT RECORD

NO.	USE	DATE
	APPR.	
	APPR.	
	PURCH	
	FAB	
	FAB. OFFICE	
	Q.A.	
	DIST.	
	ERECT	

OPEN HOLES 15/16 Ø U/N
WELD BRIDGE WELDING CODE: D1.5
STEEL AS NOTED
BOLTS
SURFACE PREP-SP
PAINT SEE SPECS
REF.DRAWING E2

REV	DATE	DESCRIPTION	
0	SEP/10/06	FOR APPROVAL	VS

RAINIER WELDING

19020 NE 84TH STREET - REDMOND, WA 98053
(425) 868-1300 FAX (425) 868-8872
STEEL AND ALUMINUM FABRICATING

PROJECT TOLT BRIDGE No 1834A
THIS DRAWING INCLUDES
FOR SNOHOMISH COUNTY OFFICIAL

DRAWN DJ DATE 07/31/2006 CHK DSC DATE 09/10/2006 DWG NUMBER 2707 - 102A 0

PRO DRAFT INC. PDI# 676 : PH:(604)589-6425
DRAWINGS PREPARED ON 3D-Xsteel File.Name :- A [106.A]
Model Name: 725_102_TOLT_BRIDGE_541
Plot Date: 09/10/2006 12:19:07

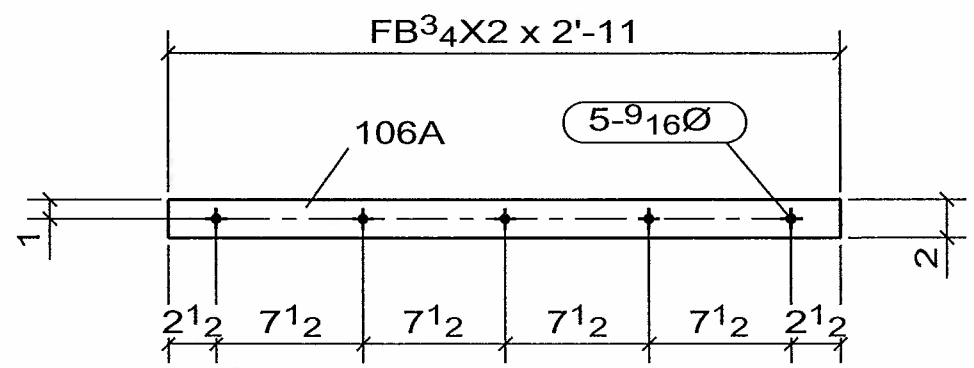

☒ CONFORMS TO DESIGN CONCEPT
☐ CONFORMS TO DESIGN CONCEPT WITH REVISIONS AS SHOWN
☐ NON-CONFORMING–REVISE & RESUBMIT

THIS SHOP DRAWING HAS BEEN REVIEWED FOR GENERAL CONFORMANCE WITH DESIGN CONCEPT ONLY AND DOES NOT RELIEVE THE FABRICATOR/VENDOR OF RESPONSIBLITY FOR CONFORMANCE WITH DESIGN DRAWINGS AND SPECIFICATIONS ALL OF WHICH HAVE PRIORITY OVER THIS SHOP DRAWING.

By A. F. Date 10-13-06

LIN & ASSOCIATES, INC.

WELD NOTE FOR ANY ASSEMBLY REQUIRING TACK WELDS:
- ALL TACK WELDS ARE TO BE MADE IN THE WELD JOINT ONLY

CONTRACTOR NOTE:
THIS DRAWING IS BEING SUBMITTED FOR APPROVAL AS REQUIRED. VERIFY OR SUPPLY ALL QUANTITIES, ALL DIMENSIONS, ALL INFORMATION, & ALL CONFIGURATIONS.

PRINT RECORD			
NO.	USE	DATE	OPEN HOLES 15/16 Ø U/N
	APPR.		WELD BRIDGE WELDING CODE: D1.5
	APPR.		STEEL AS NOTED
	PURCH		BOLTS
	FAB		SURFACE PREP-SP
	FAB. OFFICE		PAINT SEE SPECS
	Q.A.		REF.DRAWING E2
	DIST.		
	ERECT.		

REV	DATE	DESCRIPTION	
0	SEP/10/06	FOR APPROVAL	VS

RAINIER WELDING

19020 NE 84TH STREET - REDMOND, WA 98053
(425) 868-1300 FAX (425) 868-8872
STEEL AND ALUMINUM FABRICATING

PROJECT TOLT BRIDGE No 1834A
THIS DRAWING INCLUDES
FOR SNOHOMISH COUNTY OFFICIAL

DRAWN DJ DATE 07/31/2006 | CHK DSC DATE 09/10/2006 | DWG NUMBER 2707 - 106A △0

4 - KEEPER_BAR - 106A

No to SHIP	SHIP MARK	No PIECES	PIECE MARKS	DESCRIPTION	LENGTH	GRADE	REMARKS	WEIGHT	ADVANCE BILL
4	106A			KEEPER_BAR				15	
		4	106A	FB3/4X2	2'-11"	AASHTO M 270 GR. 50		15	

PRO DRAFT INC. PDI# 676 : PH:(604)589-6425
DRAWINGS PREPARED ON 3D-Xsteel File Name :- A [107.B]
Model Name: 725_102_TOLT_BRIDGE_541
Plot Date: 09/10/2006 12:19:08

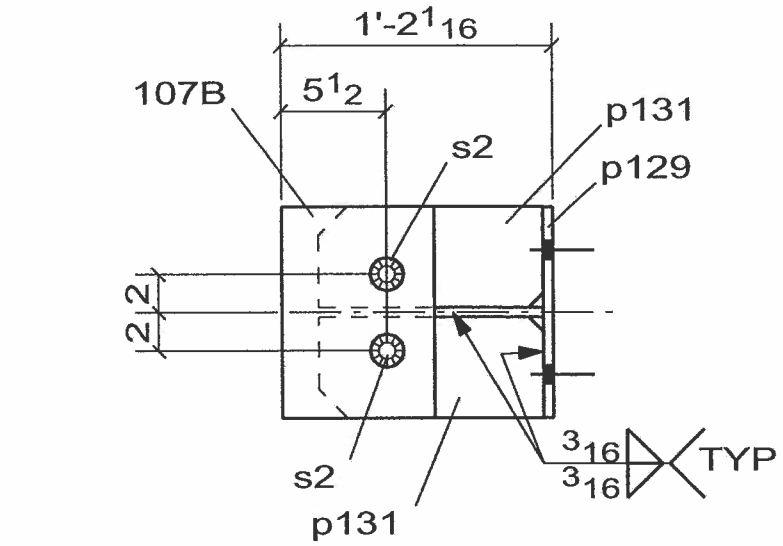

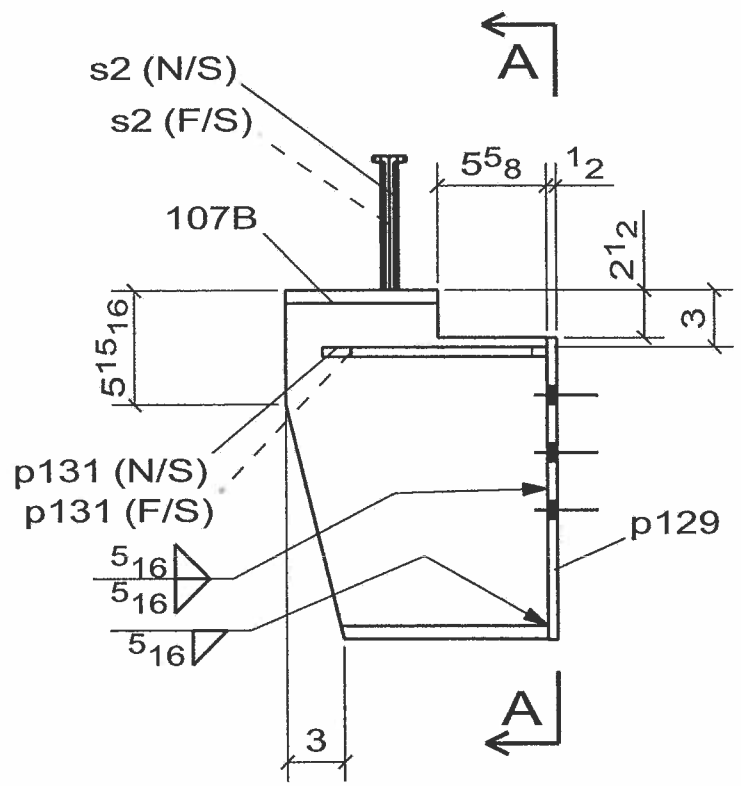

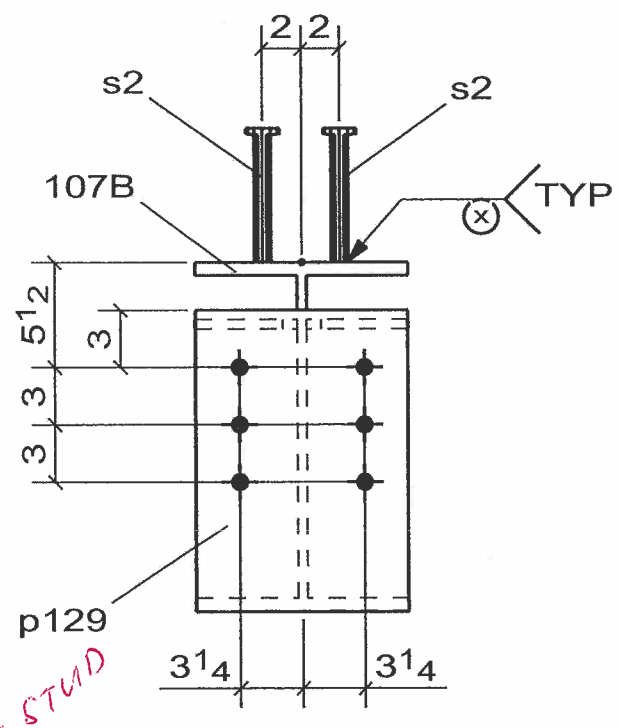

A - A

2 - STRINGER - 107B (SPAN 2)

CHECK STUD LENGTH

No to SHIP	SHIP MARK	No PIECES	PIECE MARKS	DESCRIPTION	LENGTH	GRADE	REMARKS	WEIGHT	ADVANCE BILL
2	107B			STRINGER				130	
		2	107B	W18X76	1'-1 9/16"	AASHTO M 270 GR. 50		86	
		2	p129	FB1/2X11	1'-3 3/4"	AASHTO M 270 GR. 50		25	
		4	p131	PL1/2X5 1/4	0'-11 5/8"	AASHTO M 270 GR. 50		9	
		4	s2	STUD-7/8-DIA	0'-7"	A108		1	

☐ CONFORMS TO DESIGN CONCEPT
☒ CONFORMS TO DESIGN CONCEPT WITH REVISIONS AS SHOWN
☐ NON-CONFORMING–REVISE & RESUBMIT

THIS SHOP DRAWING HAS BEEN REVIEWED FOR GENERAL CONFORMANCE WITH DESIGN CONCEPT ONLY AND DOES NOT RELIEVE THE FABRICATOR/VENDOR OF RESPONSIBLITY FOR CONFORMANCE WITH DESIGN DRAWINGS AND SPECIFICATIONS ALL OF WHICH HAVE PRIORITY OVER THIS SHOP DRAWING.

By A.F. Date 10/13/06

LIN & ASSOCIATES, INC.

WELD NOTE FOR ANY ASSEMBLY REQUIRING TACK WELDS:
- ALL TACK WELDS ARE TO BE MADE IN THE WELD JOINT ONLY

CONTRACTOR NOTE:
THIS DRAWING IS BEING SUBMITTED FOR APPROVAL AS REQUIRED. VERIFY OR SUPPLY ALL QUANTITIES, ALL DIMENSIONS, ALL INFORMATION, & ALL CONFIGURATIONS.

PRINT RECORD

NO.	USE	DATE
	APPR.	
	APPR.	
	PURCH	
	FAB	
	FAB. OFFICE	
	Q.A.	
	DIST.	
	ERECT.	

OPEN HOLES: 15/16 Ø U/N
WELD: BRIDGE WELDING CODE: D1.5
STEEL: AS NOTED
BOLTS:
SURFACE PREP-SP:
PAINT: SEE SPECS
REF.DRAWING: E3

REV	DATE	DESCRIPTION	
0	SEP/10/06	FOR APPROVAL	VS

RAINIER WELDING

19020 NE 84TH STREET - REDMOND, WA 98053
(425) 868-1300 FAX (425) 868-8872
STEEL AND ALUMINUM FABRICATING

PROJECT: TOLT BRIDGE No 1834A
THIS DRAWING INCLUDES:
FOR: SNOHOMISH COUNTY OFFICIAL

DRAWN DJ DATE 08/03/2006 | CHK DSC DATE 09/10/2006 | DWG NUMBER 2707 - 107B | 0

PRO DRAFT INC. PDI# 676 : PH:(604)589-6425
DRAWINGS PREPARED ON 3D-Xsteel File Name :- A [108.B]
Model Name: 725_102_TOLT_BRIDGE_541
Plot Date: 09/10/2006 12:19:09

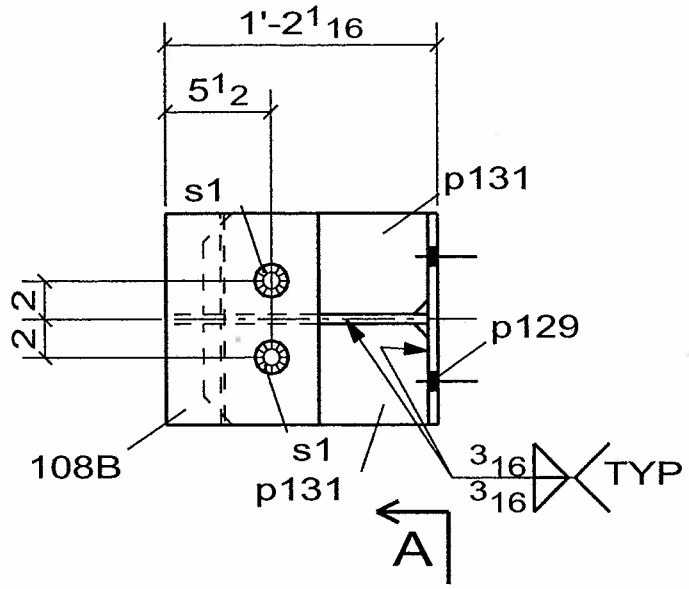

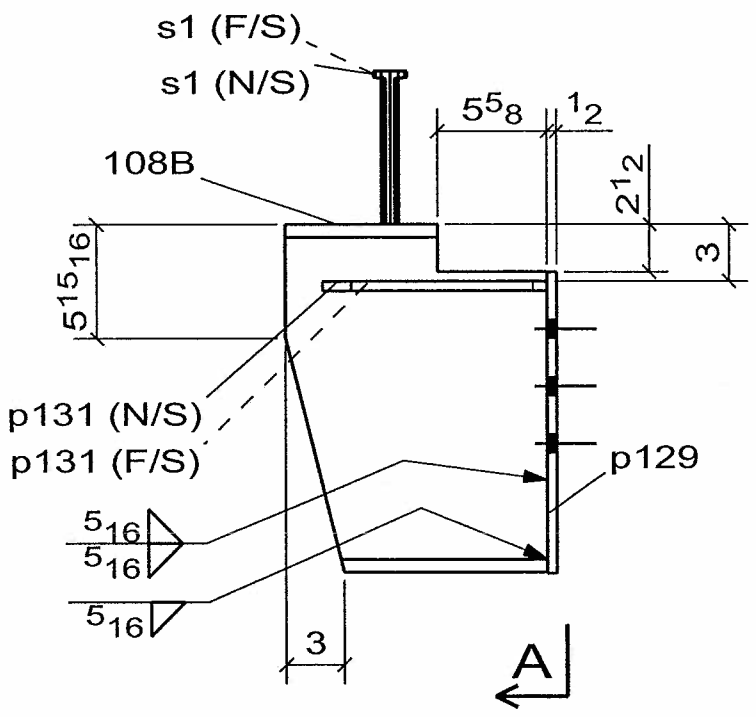

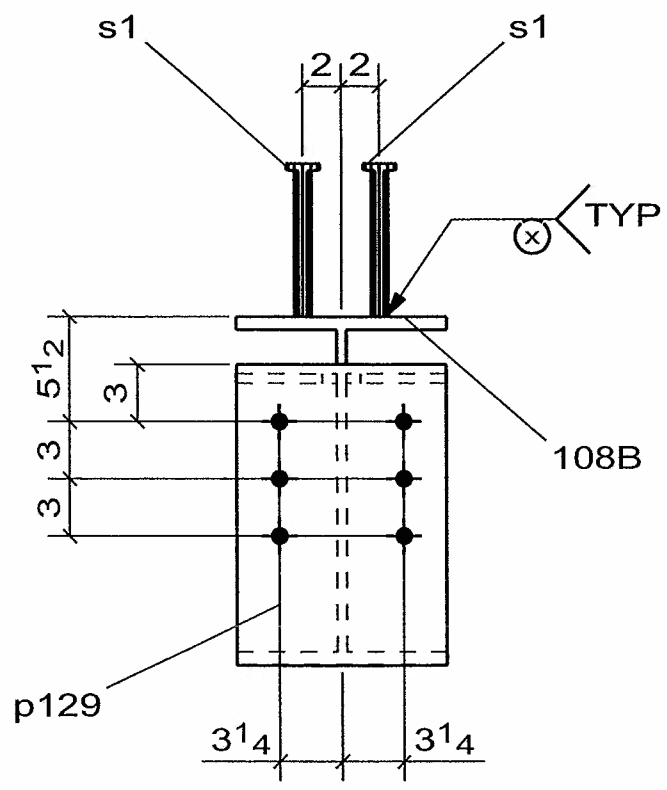

A - A

1 - STRINGER - 108B (SPAN 2)

CHECK STUDS LENGTH

No to SHIP	SHIP MARK	No PIECES	PIECE MARKS	DESCRIPTION	LENGTH	GRADE	REMARKS	WEIGHT	ADVANCE BILL
1	108B			STRINGER				131	
		1	108B	W18X76	1'-1 9/16"	AASHTO M 270 GR. 50		86	
		1	p129	FB1/2X11	1'-3 3/4"	AASHTO M 270 GR. 50		25	
		2	p131	PL1/2X5 1/4	0'-11 5/8"	AASHTO M 270 GR. 50		9	
		2	s1	STUD-7/8-DIA	0'-8"	A108		2	

CONTRACTOR NOTE:
THIS DRAWING IS BEING SUBMITTED FOR APPROVAL AS REQUIRED. VERIFY OR SUPPLY ALL QUANTITIES, ALL DIMENSIONS, ALL INFORMATION, & ALL CONFIGURATIONS.

PRINT RECORD

NO.	USE	DATE
	APPR.	
	APPR.	
	PURCH	
	FAB	
	FAB. OFFICE	
	Q.A.	
	DIST.	
	ERECT.	

OPEN HOLES: 15/16 Ø U/N
WELD: BRIDGE WELDING CODE: D1.5
STEEL: AS NOTED
BOLTS:
SURFACE PREP-SP:
PAINT: SEE SPECS
REF.DRAWING: E3

☐ CONFORMS TO DESIGN CONCEPT
☒ CONFORMS TO DESIGN CONCEPT WITH REVISIONS AS SHOWN
☐ NON-CONFORMING–REVISE & RESUBMIT
THIS SHOP DRAWING HAS BEEN REVIEWED FOR GENERAL CONFORMANCE WITH DESIGN CONCEPT ONLY AND DOES NOT RELIEVE THE FABRICATOR/VENDOR OF RESPONSIBLITY FOR CONFORMANCE WITH DESIGN DRAWINGS AND SPECIFICATIONS ALL OF WHICH HAVE PRIORITY OVER THIS SHOP DRAWING.
By A.F. Date 10/13/06
I.IN & ASSOCIATES, INC.

WELD NOTE FOR ANY ASSEMBLY REQUIRING TACK WELDS:
- ALL TACK WELDS ARE TO BE MADE IN THE WELD JOINT ONLY

REV	DATE	DESCRIPTION	
0	SEP/10/06	FOR APPROVAL	VS

RAINIER WELDING

19020 NE 84TH STREET - REDMOND, WA 98053
(425) 868-1300 FAX (425) 868-8872
STEEL AND ALUMINUM FABRICATING

PROJECT: TOLT BRIDGE No 1834A
THIS DRAWING INCLUDES:
FOR: SNOHOMISH COUNTY OFFICIAL
DRAWN DJ DATE 08/03/2006
CHK DSC DATE 09/10/2006
DWG NUMBER 2707 - 108B 0

PRO DRAFT INC. PDI# 676 : PH:(604)589-6425
DRAWINGS PREPARED ON 3D-Xsteel File Name :- A [109.B]
Model Name: 725_102_TOLT_BRIDGE_541
Plot Date: 09/10/2006 12:19:10

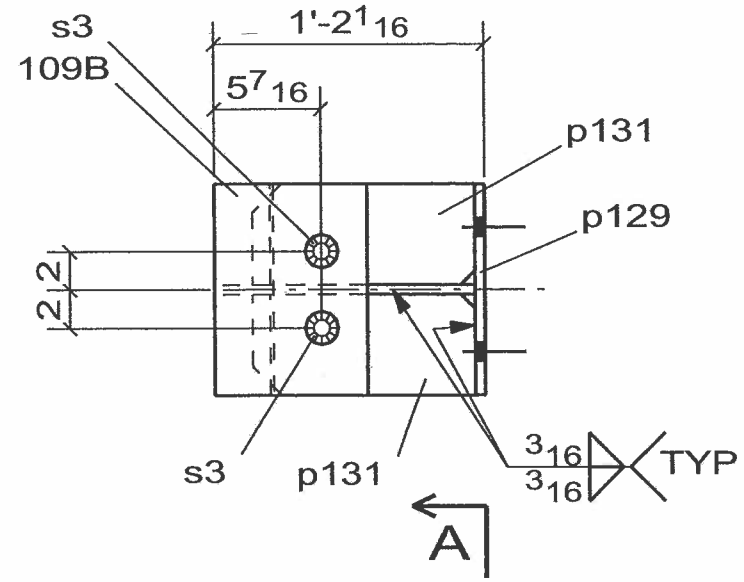

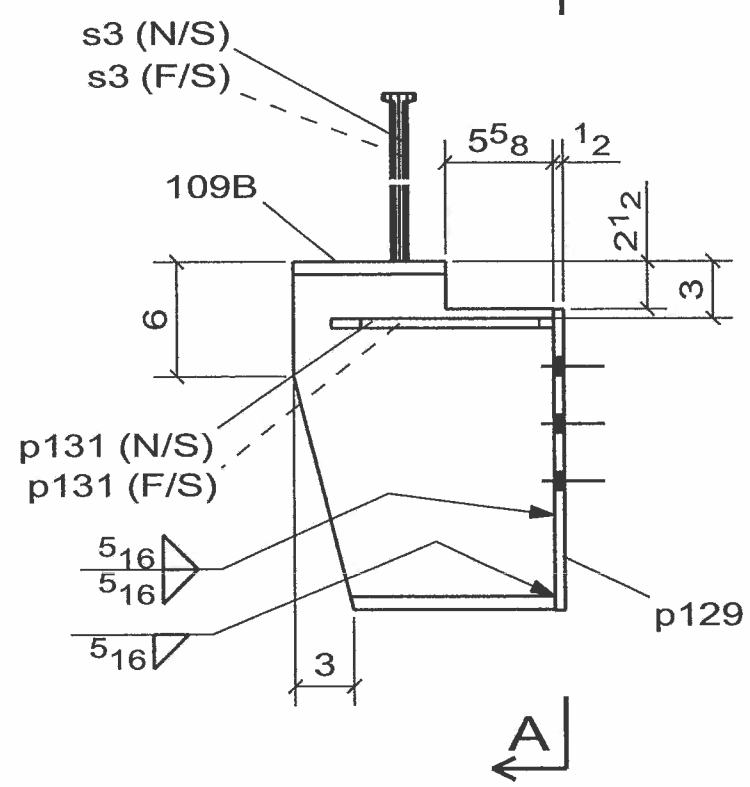

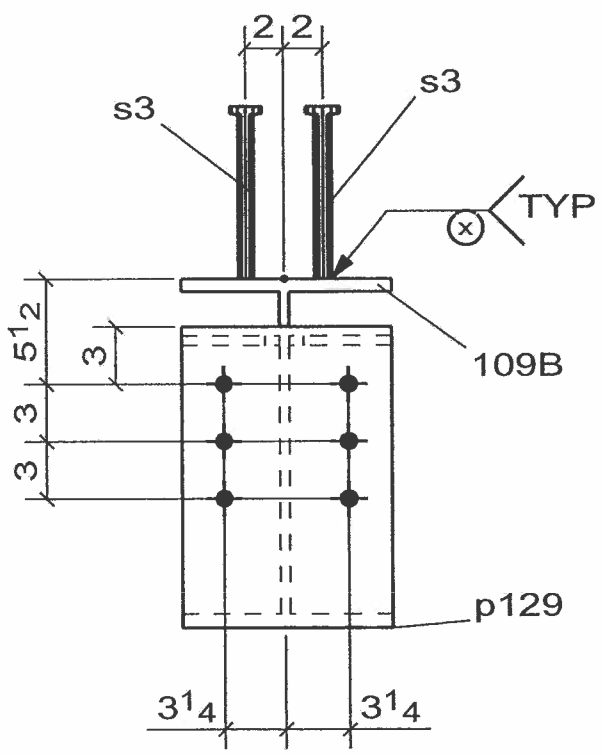

A - A

3 - STRINGER - 109B (SPAN 2)

No to SHIP	SHIP MARK	No PIECES	PIECE MARKS	DESCRIPTION	LENGTH	GRADE	REMARKS	WEIGHT	ADVANCE BILL
3	109B			STRINGER				131	
		3	109B	W18X76	1'-1 9/16"	AASHTO M 270 GR. 50		86	
		3	p129	FB1/2X11	1'-3 3/4"	AASHTO M 270 GR. 50		25	
		6	p131	PL1/2X5 1/4	0'-11 5/8"	AASHTO M 270 GR. 50		9	
		6	s3	STUD-7/8-DIA	0'-9"	A108		2	

CONTRACTOR NOTE:
THIS DRAWING IS BEING SUBMITTED FOR APPROVAL AS REQUIRED. VERIFY OR SUPPLY ALL QUANTITIES, ALL DIMENSIONS, ALL INFORMATION, & ALL CONFIGURATIONS.

PRINT RECORD

NO.	USE	DATE
	APPR.	
	APPR.	
	PURCH	
	FAB	
	FAB. OFFICE	
	Q.A.	
	DIST.	
	ERECT.	

OPEN HOLES: 15/16 Ø U/N
WELD: BRIDGE WELDING CODE: D1.5
STEEL: AS NOTED
BOLTS:
SURFACE PREP-SP:
PAINT: SEE SPECS
REF.DRAWING: E3

☒ CONFORMS TO DESIGN CONCEPT
☐ CONFORMS TO DESIGN CONCEPT WITH REVISIONS AS SHOWN
☐ NON-CONFORMING–REVISE & RESUBMIT
THIS SHOP DRAWING HAS BEEN REVIEWED FOR GENERAL CONFORMANCE WITH DESIGN CONCEPT ONLY AND DOES NOT RELIEVE THE FABRICATOR/VENDOR OF RESPONSIBLITY FOR CONFORMANCE WITH DESIGN DRAWINGS AND SPECIFICATIONS ALL OF WHICH HAVE PRIORITY OVER THIS SHOP DRAWING.
By A. F. Date 10-13-06
LIN & ASSOCIATES, INC.

WELD NOTE FOR ANY ASSEMBLY REQUIRING TACK WELDS:
- ALL TACK WELDS ARE TO BE MADE IN THE WELD JOINT ONLY

REV	DATE	DESCRIPTION	
0	SEP/10/06	FOR APPROVAL	VS

RAINIER WELDING
19020 NE 84TH STREET - REDMOND, WA 98053
(425) 868-1300 FAX (425) 868-8872
STEEL AND ALUMINUM FABRICATING

PROJECT: TOLT BRIDGE No 1834A
THIS DRAWING INCLUDES:
FOR: SNOHOMISH COUNTY OFFICIAL
DRAWN DJ DATE 08/03/2006 CHK DSC DATE 09/10/2006 DWG NUMBER 2707 - 109B 0

PRO DRAFT INC. PDI# 676 : PH:(604)589-6425
DRAWINGS PREPARED ON 3D-Xsteel File Name :- A [110.B]
Model Name: 725_102_TOLT_BRIDGE_541
Plot Date: 09/10/2006 12:19:11

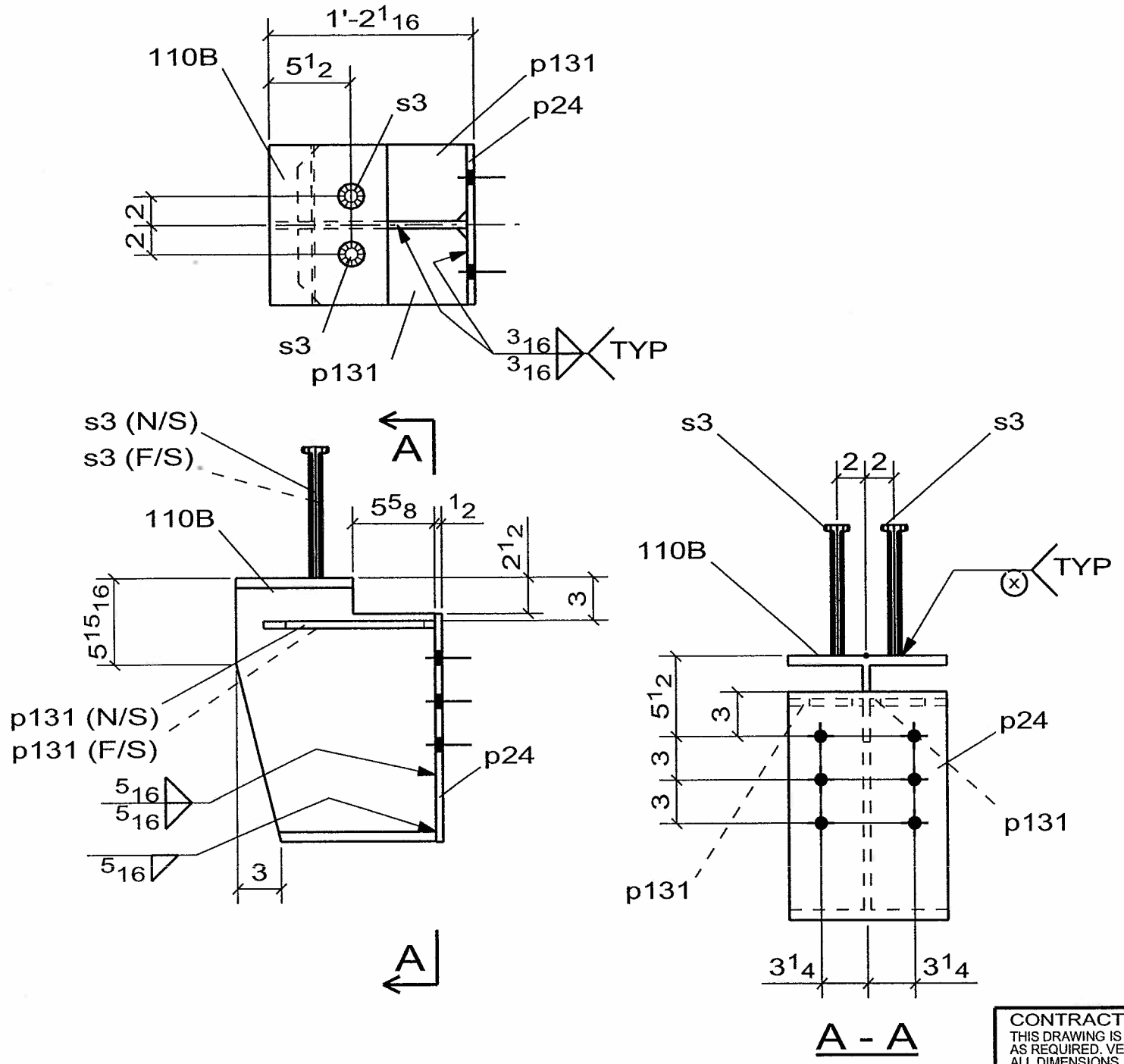

1 - STRINGER -110B (SPAN 2)

No to SHIP	SHIP MARK	No PIECES	PIECE MARKS	DESCRIPTION	LENGTH	GRADE	REMARKS	WEIGHT	ADVANCE BILL
1	110B			STRINGER				131	
		1	110B	W18X76	1'-1 9/16"	AASHTO M 270 GR. 50		86	
		1	p24	FB1/2X11	1'-3 3/4"	AASHTO M 270 GR. 50		25	
		2	p131	PL1/2X5 1/4	0'-11 5/8"	AASHTO M 270 GR. 50		9	
		2	s3	STUD-7/8-DIA	0'-9"	A108		2	

CONTRACTOR NOTE:
THIS DRAWING IS BEING SUBMITTED FOR APPROVAL AS REQUIRED. VERIFY OR SUPPLY ALL QUANTITIES, ALL DIMENSIONS, ALL INFORMATION, & ALL CONFIGURATIONS.

PRINT RECORD

NO.	USE	DATE
	APPR.	
	APPR.	
	PURCH	
	FAB	
	FAB. OFFICE	
	Q.A.	
	DIST.	
	ERECT.	

OPEN HOLES 15/16 Ø U/N
WELD BRIDGE WELDING CODE: D1.5
STEEL AS NOTED
BOLTS
SURFACE PREP-SP
PAINT SEE SPECS
REF.DRAWING E3

☒ CONFORMS TO DESIGN CONCEPT
☐ CONFORMS TO DESIGN CONCEPT WITH REVISIONS AS SHOWN
☐ NON-CONFORMING–REVISE & RESUBMIT
THIS SHOP DRAWING HAS BEEN REVIEWED FOR GENERAL CONFORMANCE WITH DESIGN CONCEPT ONLY AND DOES NOT RELIEVE THE FABRICATOR/VENDOR OF RESPONSIBLITY FOR CONFORMANCE WITH DESIGN DRAWINGS AND SPECIFICATIONS ALL OF WHICH HAVE PRIORITY OVER THIS SHOP DRAWING.
By A.F. Date 10/13/06
LIN & ASSOCIATES, INC.

WELD NOTE FOR ANY ASSEMBLY REQUIRING TACK WELDS:
- ALL TACK WELDS ARE TO BE MADE IN THE WELD JOINT ONLY

REV	DATE	DESCRIPTION	
0	SEP/10/06	FOR APPROVAL	VS

RAINIER WELDING
19020 NE 84TH STREET - REDMOND, WA 98053
(425) 868-1300 FAX (425) 868-8872
STEEL AND ALUMINUM FABRICATING

PROJECT TOLT BRIDGE No 1834A
THIS DRAWING INCLUDES
FOR SNOHOMISH COUNTY OFFICIAL
DRAWN DJ DATE 08/03/2006
CHK DSC DATE 09/10/2006
DWG NUMBER 2707 - 110B
0

PRO DRAFT INC. PDI# 676 : PH:(604)589-6425
DRAWINGS PREPARED ON 3D-Xsteel File Name :- A [115.A]
Model Name: 725_102_TOLT_BRIDGE_541
Plot Date: 09/10/2006 12:19:12

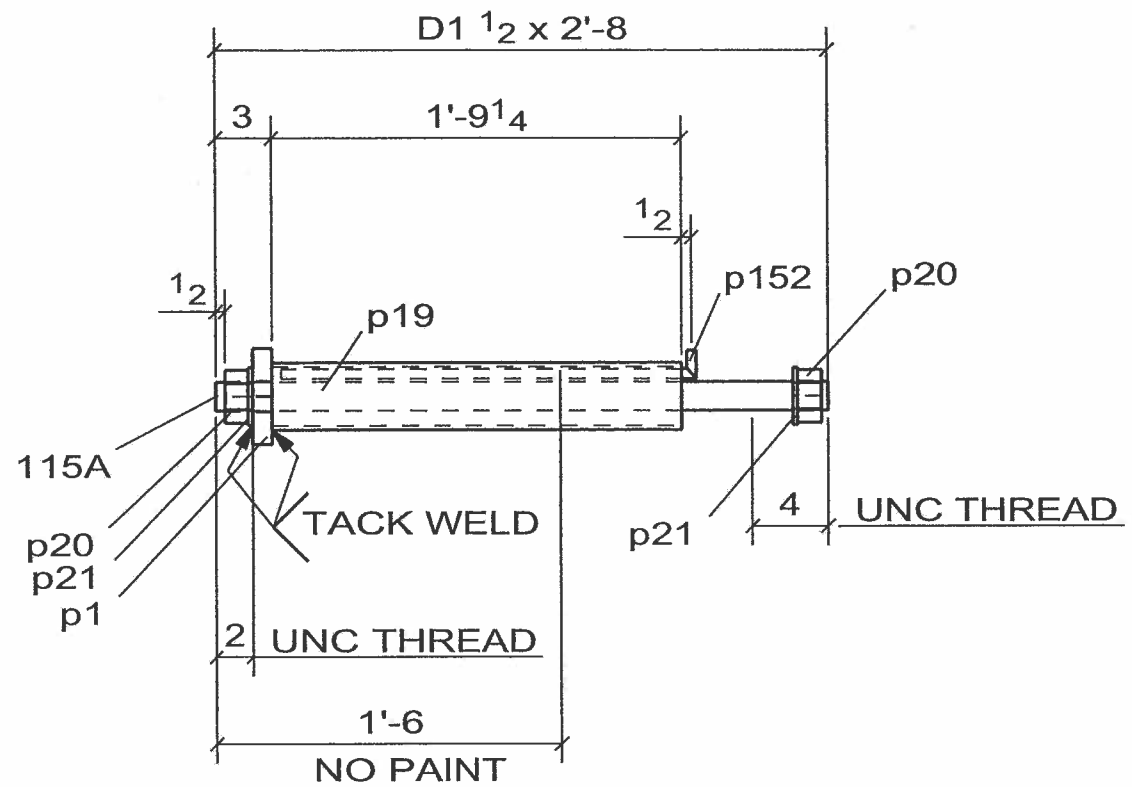

20 - PIER 1

20 - PIER 2 (EXP. BRG)

20 - PIER 3

☐ CONFORMS TO DESIGN CONCEPT
☒ CONFORMS TO DESIGN CONCEPT WITH REVISIONS AS SHOWN
☐ NON-CONFORMING–REVISE & RESUBMIT

THIS SHOP DRAWING HAS BEEN REVIEWED FOR GENERAL CONFORMANCE WITH DESIGN CONCEPT ONLY AND DOES NOT RELIEVE THE FABRICATOR/VENDOR OF RESPONSIBLITY FOR CONFORMANCE WITH DESIGN DRAWINGS AND SPECIFICATIONS ALL OF WHICH HAVE PRIORITY OVER THIS SHOP DRAWING.

By A. F. 10/13/06

LIN & ASSOCIATES, INC.

WELD NOTE FOR ANY ASSEMBLY REQUIRING TACK WELDS:
- ALL TACK WELDS ARE TO BE MADE IN THE WELD JOINT ONLY

20 - A_BOLT -115A

No to SHIP	SHIP MARK	No PIECES	PIECE MARKS	DESCRIPTION	LENGTH	GRADE	REMARKS	WEIGHT	ADVANCE BILL
20	115A			A_BOLT				41	
		20	115A	D1 1/2 ROD	2'-8"	F1554 T2E		16	
		20	p1	FB1 X5	0'-5"	AASHTO M 270 GR. 50		7	
		20	p19	PIPE_3"Ø_SCH._40	1'-9 1/4"	A53-GR.B		13	
		40	p20	1-1/2_HEAVY_HEX_NUT	0'-1 1/4"	F1554		1	
		40	p21	1-1/2Ø_WASHER	0'-0 1/4"	F1554		0	
		20	p152	D1/2 PLASTIC GROUT TUBE	1'-10 1/2"	MATERIAL AS PER.SPEC		1	

CONTRACTOR NOTE:
THIS DRAWING IS BEING SUBMITTED FOR APPROVAL AS REQUIRED. VERIFY OR SUPPLY ALL QUANTITIES, ALL DIMENSIONS, ALL INFORMATION, & ALL CONFIGURATIONS.

PRINT RECORD

NO.	USE	DATE
	APPR.	
	APPR.	
	PURCH	
	FAB	
	FAB. OFFICE	
	Q.A.	
	DIST.	
	ERECT.	

OPEN HOLES 15/16 Ø U/N
WELD BRIDGE WELDING CODE: D1.5
STEEL AS NOTED
BOLTS
SURFACE PREP-SP
PAINT SEE S2
REF.DRAWING E2

REV	DATE	DESCRIPTION	
0	SEP/10/06	FOR APPROVAL	VS

RAINIER WELDING

19020 NE 84TH STREET - REDMOND, WA 98053
(425) 868-1300 FAX (425) 868-8872
STEEL AND ALUMINUM FABRICATING

PROJECT TOLT BRIDGE No 1834A
THIS DRAWING INCLUDES
FOR SNOHOMISH COUNTY OFFICIAL

DRAWN DJ DATE 07/31/2006 | CHK DSC DATE 09/10/2006 | DWG NUMBER 2707 - 115A | 0

PRO DRAFT INC. PDI# 676 : PH:(604)589-6425
DRAWINGS PREPARED ON 3D-Xsteel File Name :- A [116.A]
Model Name: 725_102_TOLT_BRIDGE_541
Plot Date: 09/10/2006 12:19:13

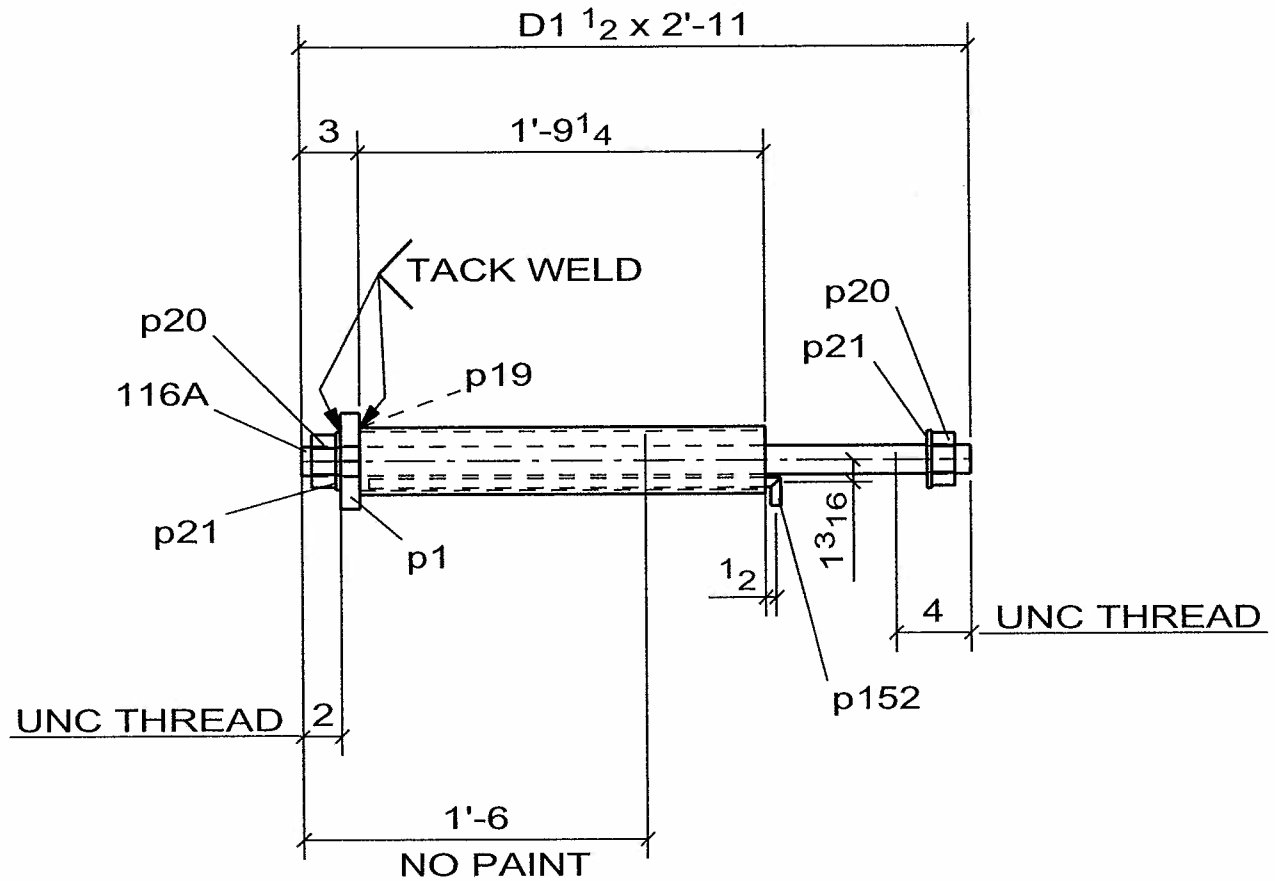

☐ CONFORMS TO DESIGN CONCEPT
☒ CONFORMS TO DESIGN CONCEPT WITH REVISIONS AS SHOWN
☐ NON-CONFORMING–REVISE & RESUBMIT

THIS SHOP DRAWING HAS BEEN REVIEWED FOR GENERAL CONFORMANCE WITH DESIGN CONCEPT ONLY AND DOES NOT RELIEVE THE FABRICATOR/VENDOR OF RESPONSIBLITY FOR CONFORMANCE WITH DESIGN DRAWINGS AND SPECIFICATIONS ALL OF WHICH HAVE PRIORITY OVER THIS SHOP DRAWING.

By A.F. Date 10/13/06

LIN & ASSOCIATES, INC.

PIER #2 (FIXED BRG.)

WELD NOTE FOR ANY ASSEMBLY REQUIRING TACK WELDS:
- ALL TACK WELDS ARE TO BE MADE IN THE WELD JOINT ONLY

20 - A_BOLT -116A

No to SHIP	SHIP MARK	No PIECES	PIECE MARKS	DESCRIPTION	LENGTH	GRADE	REMARKS	WEIGHT	ADVANCE BILL
20	116A			A_BOLT				42	
		20	116A	D1 1/2 ROD	2'-11"	F1554 T2E		17	
		20	p1	FB1 X5	0'-5"	AASHTO M 270 GR. 50		7	
		20	p19	PIPE_3"Ø_SCH._40	1'-9 1/4"	A53-GR.B		13	
		40	p20	1-1/2_HEAVY_HEX_NUT	0'-1 1/4"	F1554		1	
		40	p21	1-1/2Ø_WASHER	0'-0 1/4"	F1554		0	
		20	p152	D1/2 PLASTIC GROUT TUBE	1'-10 1/2"	MATERIAL AS PER.SPEC		1	

CONTRACTOR NOTE:
THIS DRAWING IS BEING SUBMITTED FOR APPROVAL AS REQUIRED. VERIFY OR SUPPLY ALL QUANTITIES, ALL DIMENSIONS, ALL INFORMATION, & ALL CONFIGURATIONS.

PRINT RECORD

NO.	USE	DATE
	APPR.	
	APPR.	
	PURCH	
	FAB	
	FAB. OFFICE	
	Q.A.	
	DIST.	
	ERECT.	

OPEN HOLES 15/16 Ø U/N
WELD BRIDGE WELDING CODE: D1.5
STEEL AS NOTED
BOLTS
SURFACE PREP-SP
PAINT SEE S2
REF.DRAWING E3

REV	DATE	DESCRIPTION	
0	SEP/10/06	FOR APPROVAL	VS

RAINIER WELDING

19020 NE 84TH STREET - REDMOND, WA 98053
(425) 868-1300 FAX (425) 868-8872
STEEL AND ALUMINUM FABRICATING

PROJECT TOLT BRIDGE No 1834A
THIS DRAWING INCLUDES
FOR SNOHOMISH COUNTY OFFICIAL

DRAWN DJ DATE 08/18/2006
CHK DSC DATE 09/10/2006
DWG NUMBER 2707 - 116A △0

PRO DRAFT INC. PDI# 676 : PH:(604)589-6425
DRAWINGS PREPARED ON 3D-Xsteel File Name :- A [117.A]
Model Name: 725_102_TOLT_BRIDGE_541
Plot Date: 09/10/2006 12:19:15

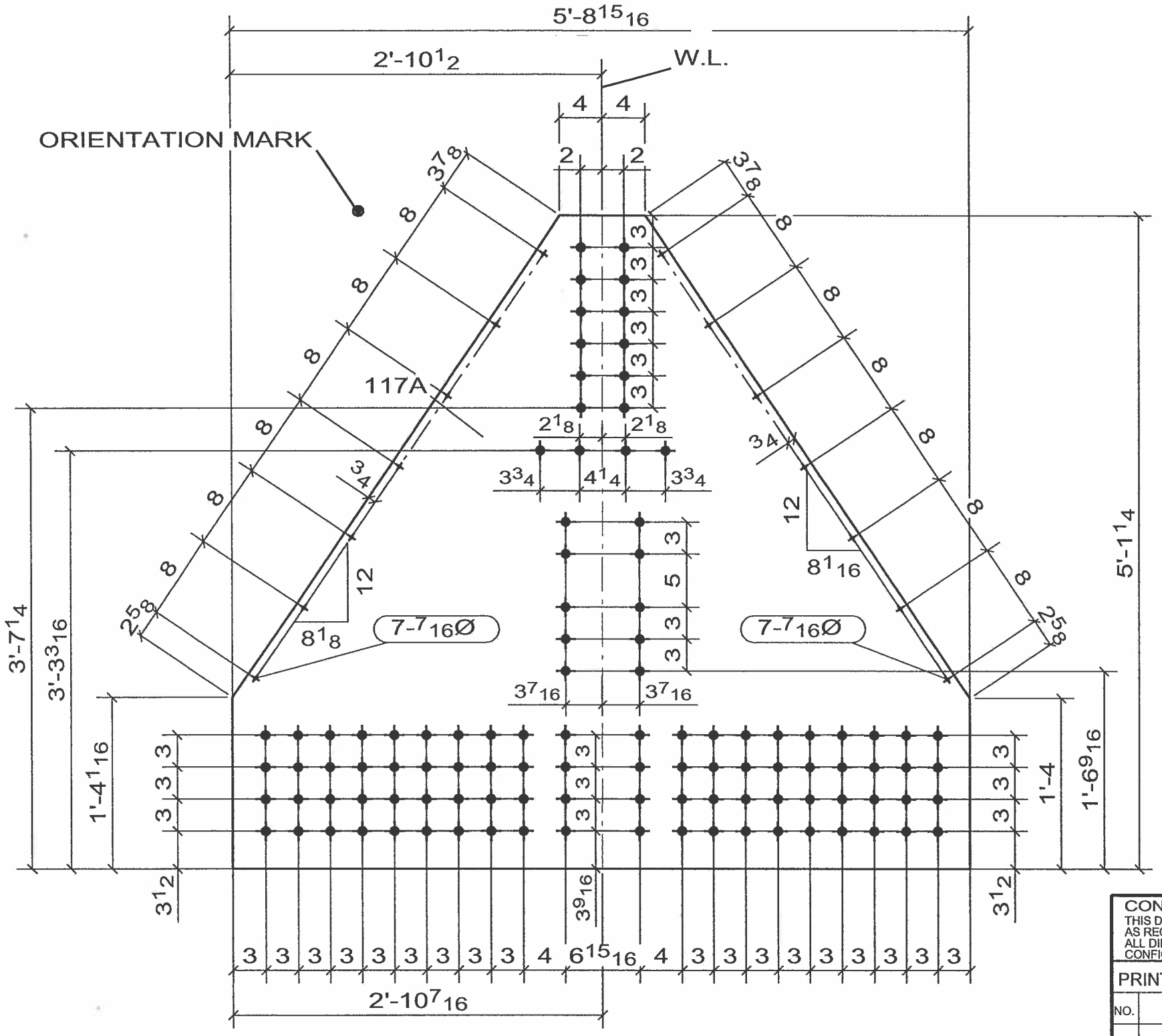

2 - GUSSET_PL -117A

No to SHIP	SHIP MARK	No PIECES	PIECE MARKS	DESCRIPTION	LENGTH	GRADE	REMARKS	WEIGHT	ADVANCE BILL
2	117A			GUSSET_PL				1046	
		2	117A	PL7/8X61 1/4	5'-8 15/16"	AASHTO M 270 GR. 50	FCM/V	1046	

CONTRACTOR NOTE:
THIS DRAWING IS BEING SUBMITTED FOR APPROVAL AS REQUIRED. VERIFY OR SUPPLY ALL QUANTITIES, ALL DIMENSIONS, ALL INFORMATION, & ALL CONFIGURATIONS.

PRINT RECORD

NO.	USE	DATE
	APPR.	
	APPR.	
	PURCH	
	FAB	
	FAB. OFFICE	
	Q.A.	
	DIST.	
	ERECT.	

OPEN HOLES 15/16 Ø U/N
WELD BRIDGE WELDING CODE: D1.5
STEEL AS NOTED
BOLTS
SURFACE PREP-SP
PAINT SEE SPECS
REF.DRAWING E6, E8

☒ CONFORMS TO DESIGN CONCEPT
☐ CONFORMS TO DESIGN CONCEPT WITH REVISIONS AS SHOWN
☐ NON-CONFORMING-REVISE & RESUBMIT
THIS SHOP DRAWING HAS BEEN REVIEWED FOR GENERAL CONFORMANCE WITH DESIGN CONCEPT ONLY AND DOES NOT RELIEVE THE FABRICATOR/VENDOR OF RESPONSIBLITY FOR CONFORMANCE WITH DESIGN DRAWINGS AND SPECIFICATIONS ALL OF WHICH HAVE PRIORITY OVER THIS SHOP DRAWING.
By K. F. Date 10-13-06
LIN & ASSOCIATES, INC.

WELD NOTE FOR ANY ASSEMBLY REQUIRING TACK WELDS:
- ALL TACK WELDS ARE TO BE MADE IN THE WELD JOINT ONLY

REV	DATE	DESCRIPTION	
0	SEP/10/06	FOR APPROVAL	VS

RAINIER WELDING

19020 NE 84TH STREET - REDMOND, WA 98053
(425) 868-1300 FAX (425) 868-8872
STEEL AND ALUMINUM FABRICATING

PROJECT TOLT BRIDGE No 1834A
THIS DRAWING INCLUDES
FOR SNOHOMISH COUNTY OFFICIAL
DRAWN DJ DATE 07/31/2006 CHK DSC DATE 09/10/2006 DWG NUMBER 2707 - 117A 0

PRO DRAFT INC. PDI# 676 : PH:(604)589-6425
DRAWINGS PREPARED ON 3D-Xsteel File Name :- A [118.A]
Model Name: 725_102_TOLT_BRIDGE_541
Plot Date: 09/10/2006 12:19:17

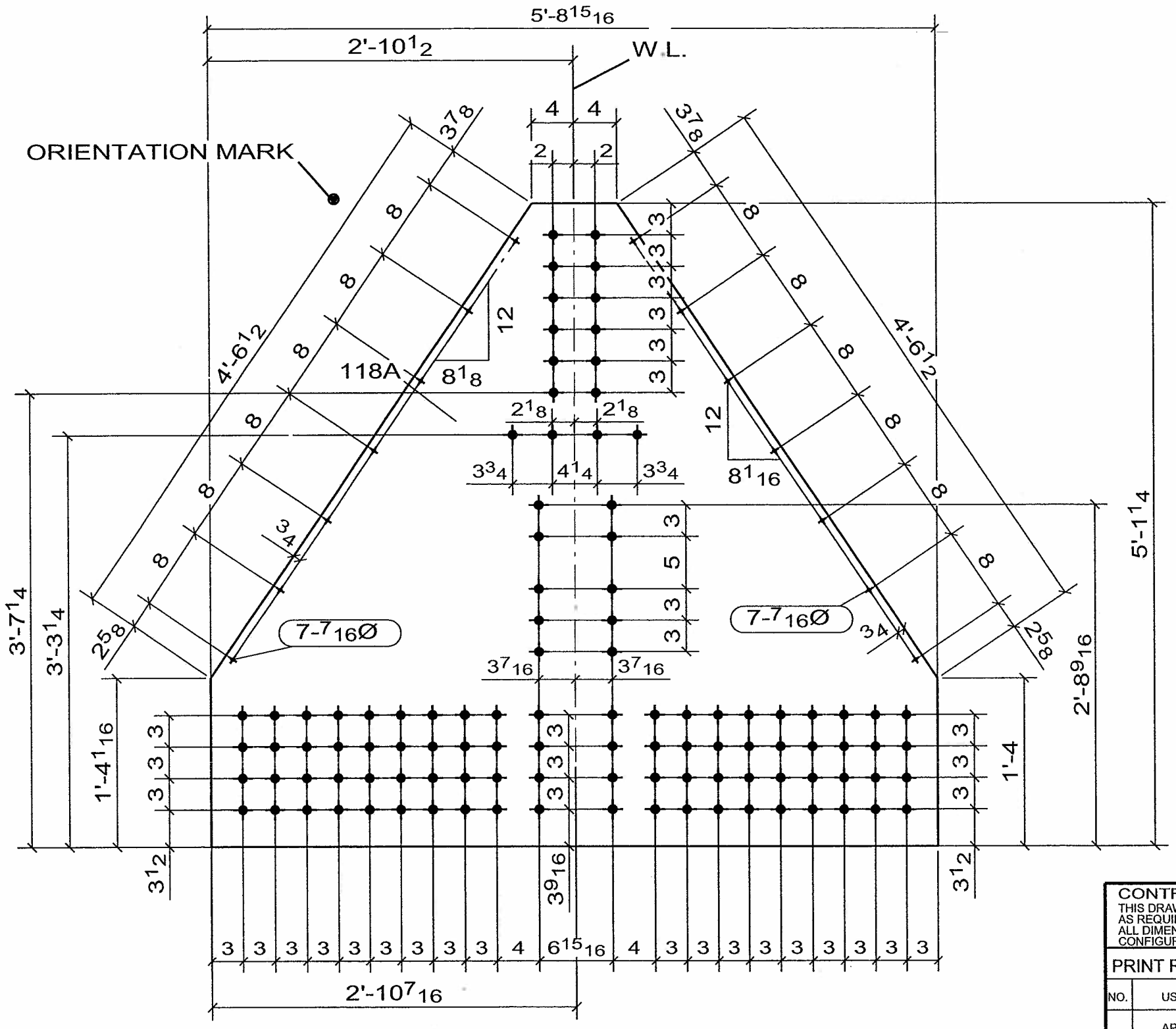

2 - GUSSET_PL -118A

COORDINATE WITH SS COVER PL SHOP DWG'S

CONFORMS TO DESIGN CONCEPT
☒ CONFORMS TO DESIGN CONCEPT WITH REVISIONS AS SHOWN
☐ NON-CONFORMING-REVISE & RESUBMIT
THIS SHOP DRAWING HAS BEEN REVIEWED FOR GENERAL CONFORMANCE WITH DESIGN CONCEPT ONLY AND DOES NOT RELIEVE THE FABRICATOR/VENDOR OF RESPONSIBLITY FOR CONFORMANCE WITH DESIGN DRAWINGS AND SPECIFICATIONS ALL OF WHICH HAVE PRIORITY OVER THIS SHOP DRAWING.
By A.F. Date 10/13/06
LIN & ASSOCIATES, INC.

WELD NOTE FOR ANY ASSEMBLY REQUIRING TACK WELDS:
- ALL TACK WELDS ARE TO BE MADE IN THE WELD JOINT ONLY

No to SHIP	SHIP MARK	No PIECES	PIECE MARKS	DESCRIPTION	LENGTH	GRADE	REMARKS	WEIGHT	ADVANCE BILL
2	118A			GUSSET_PL				1046	
		2	118A	PL7/8X61 1/4	5'-8 15/16"	AASHTO M 270 GR. 50	FCM/V	1046	

CONTRACTOR NOTE:
THIS DRAWING IS BEING SUBMITTED FOR APPROVAL AS REQUIRED. VERIFY OR SUPPLY ALL QUANTITIES, ALL DIMENSIONS, ALL INFORMATION, & ALL CONFIGURATIONS.

PRINT RECORD

NO.	USE	DATE
	APPR.	
	APPR.	
	PURCH	
	FAB	
	FAB. OFFICE	
	Q.A.	
	DIST.	
	ERECT.	

OPEN HOLES 15/16 Ø U/N
WELD BRIDGE WELDING CODE: D1.5
STEEL AS NOTED
BOLTS
SURFACE PREP-SP
PAINT SEE SPECS
REF.DRAWING E6, E8

REV	DATE	DESCRIPTION	
0	SEP/10/06	FOR APPROVAL	VS

RAINIER WELDING

19020 NE 84TH STREET - REDMOND, WA 98053
(425) 868-1300 FAX (425) 868-8872
STEEL AND ALUMINUM FABRICATING

PROJECT TOLT BRIDGE No 1834A
THIS DRAWING INCLUDES
FOR SNOHOMISH COUNTY OFFICIAL

DRAWN DJ DATE 07/31/2006 CHK DSC DATE 09/10/2006 DWG NUMBER 2707 - 118A 0

PRO DRAFT INC. PDI# 676 : PH:(604)589-6425
DRAWINGS PREPARED ON 3D-Xsteel File Name :- A [119.A]
Model Name: 725_102_TOLT_BRIDGE_541
Plot Date: 09/10/2006 12:19:18

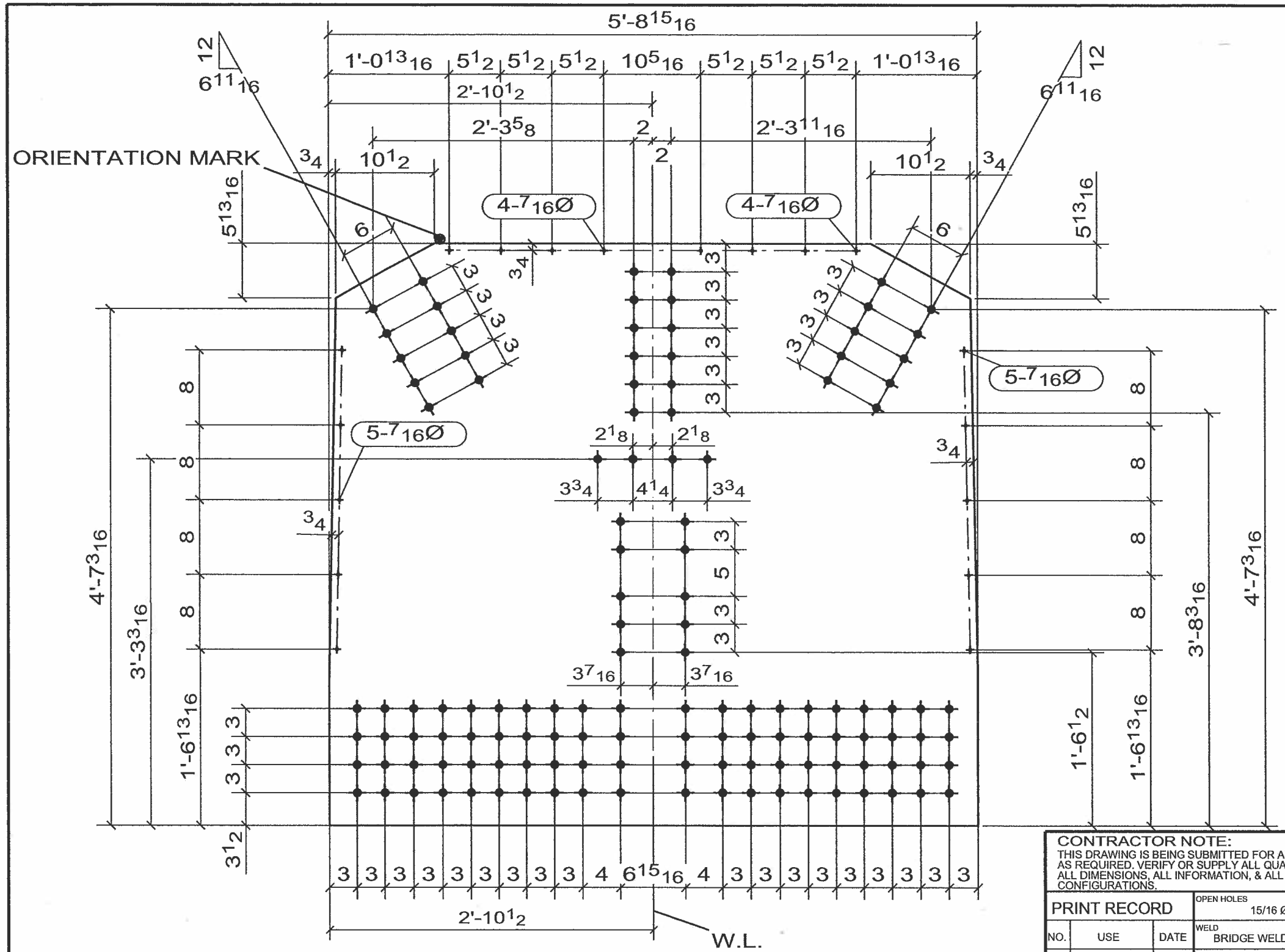

COORDINATE WITH ST COVER PL
SHOP DWG'S

CONFORMS TO DESIGN CONCEPT
☒ CONFORMS TO DESIGN CONCEPT WITH REVISIONS AS SHOWN
☐ NON-CONFORMING–REVISE & RESUBMIT
THIS SHOP DRAWING HAS BEEN REVIEWED FOR GENERAL CONFORMANCE WITH DESIGN CONCEPT ONLY AND DOES NOT RELIEVE THE FABRICATOR/VENDOR OF RESPONSIBLITY FOR CONFORMANCE WITH DESIGN DRAWINGS AND SPECIFICATIONS ALL OF WHICH HAVE PRIORITY OVER THIS SHOP DRAWING.
By A.F. Date 10/13/06
LIN & ASSOCIATES, INC.

WELD NOTE FOR ANY ASSEMBLY REQUIRING TACK WELDS:
- ALL TACK WELDS ARE TO BE MADE IN THE WELD JOINT ONLY

1 - GUSSET_PL -119A

No to SHIP	SHIP MARK	No PIECES	PIECE MARKS	DESCRIPTION	LENGTH	GRADE	REMARKS	WEIGHT	ADVANCE BILL
1	119A			GUSSET_PL				1063	
		1	119A	PL7/8X62 3/16	5'-8 15/16"	AASHTO M 270 GR. 50	FCM/V	1063	

CONTRACTOR NOTE:
THIS DRAWING IS BEbeing SUBMITTED FOR APPROVAL AS REQUIRED. VERIFY OR SUPPLY ALL QUANTITIES, ALL DIMENSIONS, ALL INFORMATION, & ALL CONFIGURATIONS.

PRINT RECORD

NO.	USE	DATE
	APPR.	
	APPR.	
	PURCH	
	FAB	
	FAB. OFFICE	
	Q.A.	
	DIST.	
	ERECT.	

OPEN HOLES 15/16 Ø U/N
WELD BRIDGE WELDING CODE: D1.5
STEEL AS NOTED
BOLTS
SURFACE PREP-SP
PAINT SEE SPECS
REF.DRAWING E8

REV	DATE	DESCRIPTION	
0	SEP/10/06	FOR APPROVAL	VS

RAINIER WELDING

19020 NE 84TH STREET - REDMOND, WA 98053
(425) 868-1300 FAX (425) 868-8872
STEEL AND ALUMINUM FABRICATING

PROJECT TOLT BRIDGE No 1834A
THIS DRAWING INCLUDES
FOR SNOHOMISH COUNTY OFFICIAL
DRAWN DJ DATE 07/31/2006 CHK DSC DATE 09/10/2006 DWG NUMBER 2707 - 119A 0

PRO DRAFT INC. PDI# 676 PH:(604)589-6425
DRAWINGS PREPARED ON 3D-Xsteel File Name :- A [120.A]
Model Name: 725_102_TOLT_BRIDGE_541
Plot Date: 09/10/2006 12:19:20

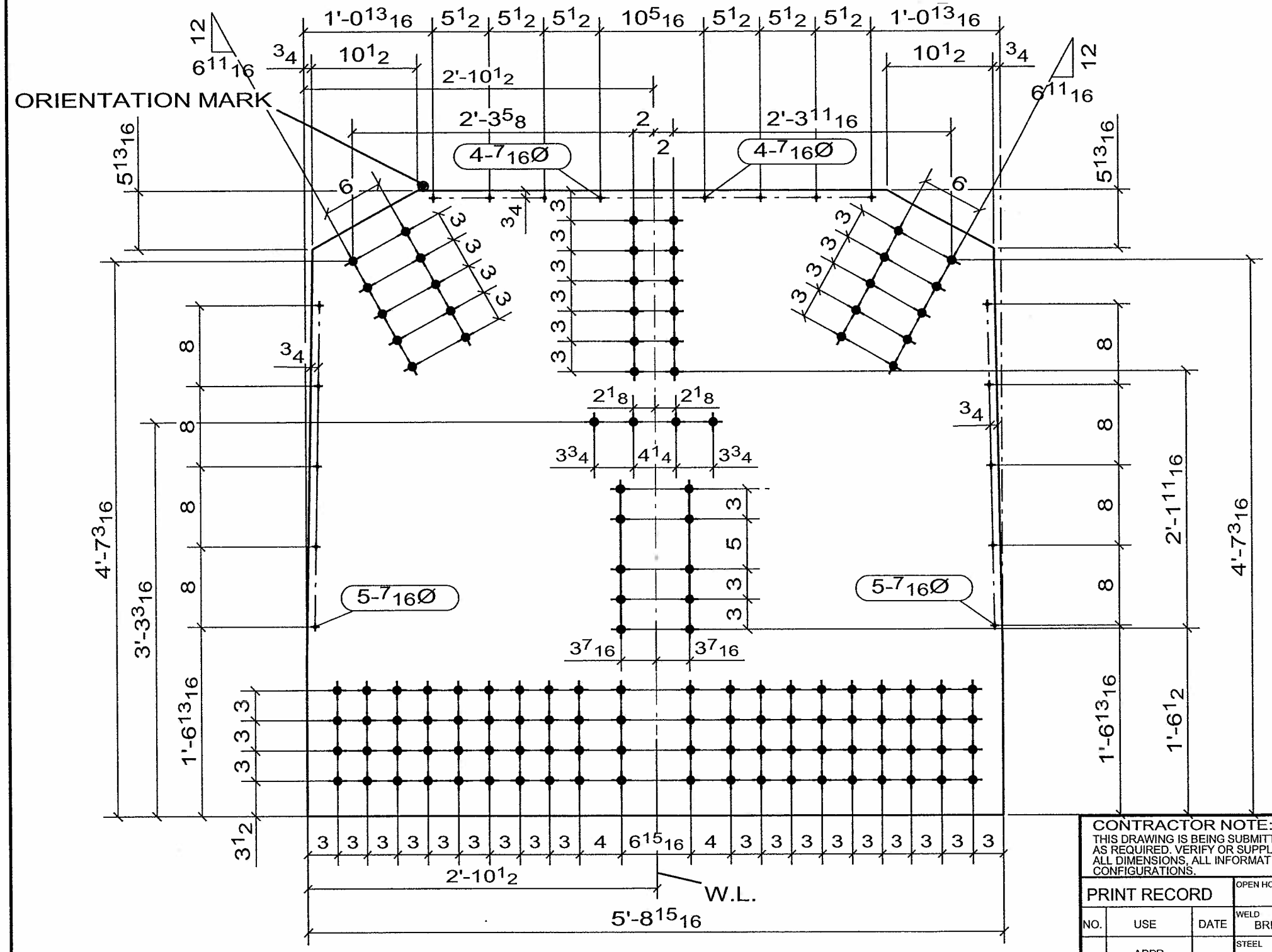

1 - GUSSET_PL -120A

No to SHIP	SHIP MARK	No PIECES	PIECE MARKS	DESCRIPTION	LENGTH	GRADE	REMARKS	WEIGHT	ADVANCE BILL
1	120A			GUSSET_PL				1063	
		1	120A	PL7/8X62 3/16	5'-8 15/16"	AASHTO M 270 GR. 50	FCM/V	1063	

CONTRACTOR NOTE:
THIS DRAWING IS BEING SUBMITTED FOR APPROVAL AS REQUIRED. VERIFY OR SUPPLY ALL QUANTITIES, ALL DIMENSIONS, ALL INFORMATION, & ALL CONFIGURATIONS.

PRINT RECORD

NO.	USE	DATE
	APPR.	
	APPR.	
	PURCH	
	FAB	
	FAB. OFFICE	
	Q.A.	
	DIST.	
	ERECT.	

OPEN HOLES 15/16 Ø U/N
WELD BRIDGE WELDING CODE: D1.5
STEEL AS NOTED
BOLTS
SURFACE PREP-SP
PAINT SEE SPECS
REF.DRAWING E6

☒ CONFORMS TO DESIGN CONCEPT
☐ CONFORMS TO DESIGN CONCEPT WITH REVISIONS AS SHOWN
☐ NON-CONFORMING-REVISE & RESUBMIT
THIS SHOP DRAWING HAS BEEN REVIEWED FOR GENERAL CONFORMANCE WITH DESIGN CONCEPT ONLY AND DOES NOT RELIEVE THE FABRICATOR/VENDOR OF RESPONSIBLITY FOR CONFORMANCE WITH DESIGN DRAWINGS AND SPECIFICATIONS ALL OF WHICH HAVE PRIORITY OVER THIS SHOP DRAWING.
By A. F. Date 10-13-06
LIN & ASSOCIATES, INC.

WELD NOTE FOR ANY ASSEMBLY REQUIRING TACK WELDS:
- ALL TACK WELDS ARE TO BE MADE IN THE WELD JOINT ONLY

REV	DATE	DESCRIPTION	
0	SEP/10/06	FOR APPROVAL	VS

RAINIER WELDING

19020 NE 84TH STREET - REDMOND, WA 98053
(425) 868-1300 FAX (425) 868-8872
STEEL AND ALUMINUM FABRICATING

PROJECT TOLT BRIDGE No 1834A
THIS DRAWING INCLUDES
FOR SNOHOMISH COUNTY OFFICIAL

DRAWN DJ DATE 07/31/2006
CHK DSC DATE 09/10/2006
DWG NUMBER 2707 - 120A △0

PRO DRAFT INC. PDI# 676 : PH:(604)589-6425
DRAWINGS PREPARED ON 3D-Xsteel File Name :- A [121.A]
Model Name: 725_102_TOLT_BRIDGE_541
Plot Date: 09/10/2006 12:19:21

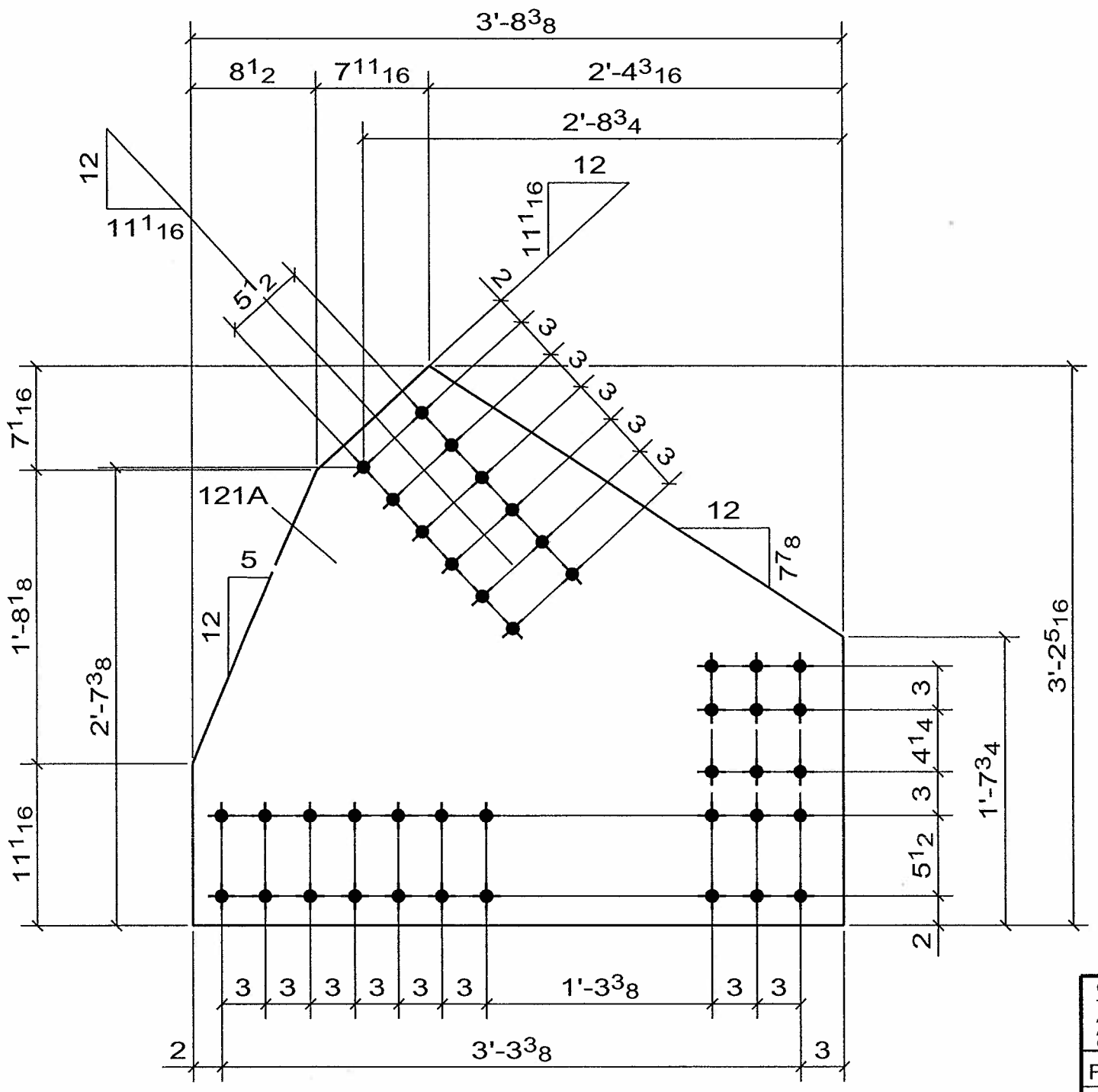

13 - GUSSET_PL -121A

No to SHIP	SHIP MARK	No PIECES	PIECE MARKS	DESCRIPTION	LENGTH	GRADE	REMARKS	WEIGHT	ADVANCE BILL
13	121A			GUSSET_PL				422	
		13	121A	PL7/8X38 5/16	3'-8 3/8"	AASHTO M 270 GR. 50	FCM/V	422	

CONTRACTOR NOTE:
THIS DRAWING IS BEING SUBMITTED FOR APPROVAL AS REQUIRED. VERIFY OR SUPPLY ALL QUANTITIES, ALL DIMENSIONS, ALL INFORMATION, & ALL CONFIGURATIONS.

PRINT RECORD

NO.	USE	DATE
	APPR.	
	APPR.	
	PURCH	
	FAB	
	FAB. OFFICE	
	Q.A.	
	DIST.	
	ERECT.	

OPEN HOLES: 15/16 Ø U/N
WELD: BRIDGE WELDING CODE: D1.5
STEEL: AS NOTED
BOLTS:
SURFACE PREP-SP:
PAINT: SEE SPECS
REF.DRAWING: E2, E3

☒ CONFORMS TO DESIGN CONCEPT
☐ CONFORMS TO DESIGN CONCEPT WITH REVISIONS AS SHOWN
☐ NON-CONFORMING–REVISE & RESUBMIT
THIS SHOP DRAWING HAS BEEN REVIEWED FOR GENERAL CONFORMANCE WITH DESIGN CONCEPT ONLY AND DOES NOT RELIEVE THE FABRICATOR/VENDOR OF RESPONSIBILITY FOR CONFORMANCE WITH DESIGN DRAWINGS AND SPECIFICATIONS ALL OF WHICH HAVE PRIORITY OVER THIS SHOP DRAWING.
By A.F. Date 10-13-06
LIN & ASSOCIATES, INC.

WELD NOTE FOR ANY ASSEMBLY REQUIRING TACK WELDS:
- ALL TACK WELDS ARE TO BE MADE IN THE WELD JOINT ONLY

REV	DATE	DESCRIPTION	
0	SEP/10/06	FOR APPROVAL	VS

RAINIER WELDING

19020 NE 84TH STREET - REDMOND, WA 98053
(425) 868-1300 FAX (425) 868-8872
STEEL AND ALUMINUM FABRICATING

PROJECT: TOLT BRIDGE No 1834A
THIS DRAWING INCLUDES:
FOR: SNOHOMISH COUNTY OFFICIAL

DRAWN	CHK	DWG NUMBER
DJ	DSC	2707 - 121A
DATE 07/31/2006	DATE 09/10/2006	0

PRO DRAFT INC. PDI# 676 : PH:(604)589-6425
DRAWINGS PREPARED ON 3D-Xsteel File Name :- A [122.A]
Model Name: 725_102_TOLT_BRIDGE_541
Plot Date: 09/10/2006 12:19:22

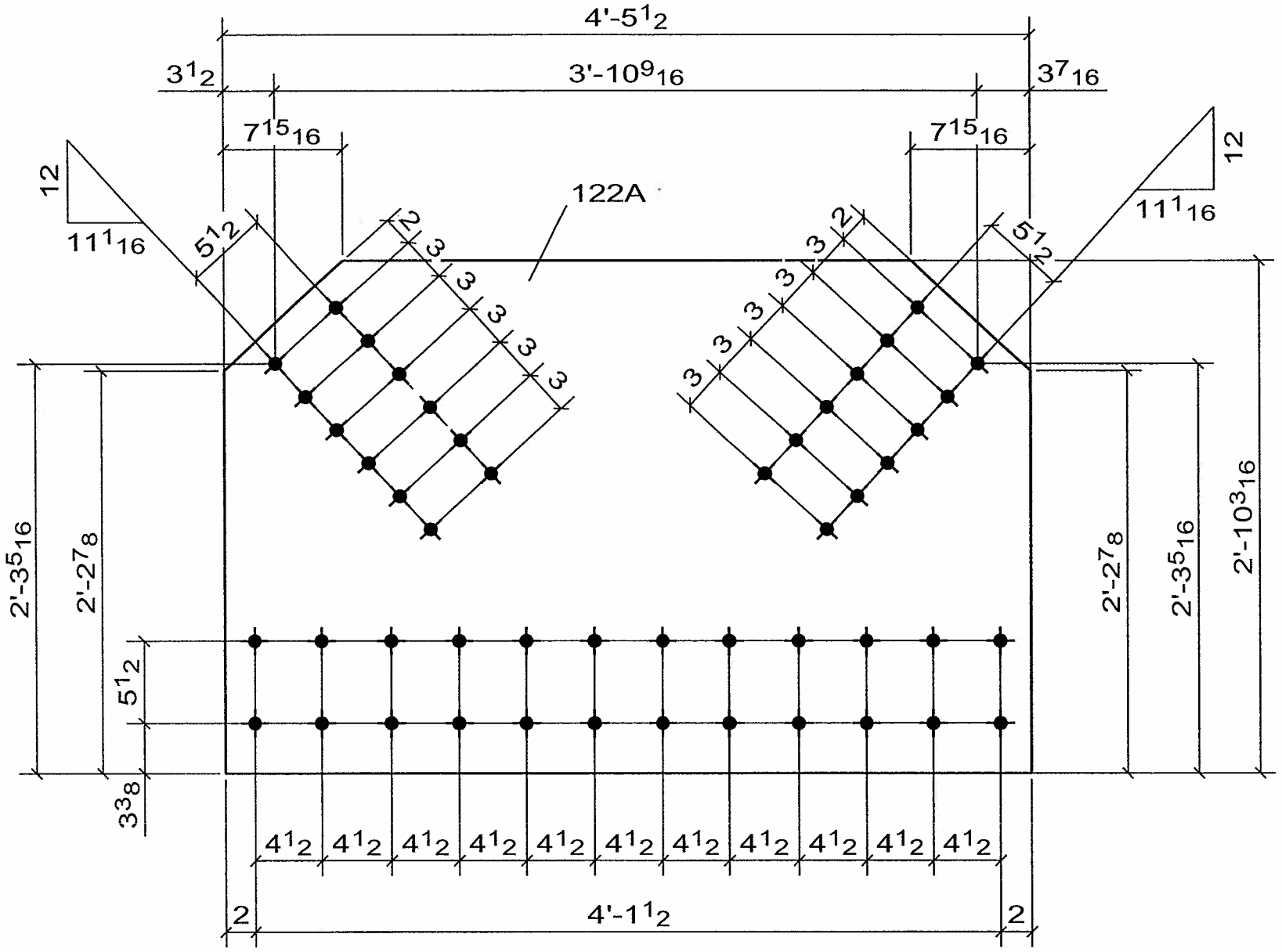

CONFORMS TO DESIGN CONCEPT
☐ CONFORMS TO DESIGN CONCEPT WITH REVISIONS AS SHOWN
☐ NON-CONFORMING–REVISE & RESUBMIT
THIS SHOP DRAWING HAS BEEN REVIEWED FOR GENERAL CONFORMANCE WITH DESIGN CONCEPT ONLY AND DOES NOT RELIEVE THE FABRICATOR/VENDOR OF RESPONSIBLITY FOR CONFORMANCE WITH DESIGN DRAWINGS AND SPECIFICATIONS ALL OF WHICH HAVE PRIORITY OVER THIS SHOP DRAWING.
By A. F. Date 10-13-06
LIN & ASSOCIATES, INC.

WELD NOTE FOR ANY ASSEMBLY REQUIRING TACK WELDS:
- ALL TACK WELDS ARE TO BE MADE IN THE WELD JOINT ONLY

CONTRACTOR NOTE:
THIS DRAWING IS BEING SUBMITTED FOR APPROVAL AS REQUIRED. VERIFY OR SUPPLY ALL QUANTITIES, ALL DIMENSIONS, ALL INFORMATION, & ALL CONFIGURATIONS.

PRINT RECORD

NO.	USE	DATE
	APPR.	
	APPR.	
	PURCH	
	FAB	
	FAB. OFFICE	
	Q.A.	
	DIST.	
	ERECT.	

OPEN HOLES: 15/16 Ø U/N
WELD: BRIDGE WELDING CODE: D1.5
STEEL: AS NOTED
BOLTS:
SURFACE PREP-SP:
PAINT: SEE SPECS
REF.DRAWING: E2, E3

REV	DATE	DESCRIPTION	
0	SEP/10/06	FOR APPROVAL	VS

RAINIER WELDING

19020 NE 84TH STREET - REDMOND, WA 98053
(425) 868-1300 FAX (425) 868-8872
STEEL AND ALUMINUM FABRICATING

PROJECT: TOLT BRIDGE No 1834A
THIS DRAWING INCLUDES:
FOR: SNOHOMISH COUNTY OFFICIAL

DRAWN DJ DATE 07/31/2006 | CHK DSC DATE 09/10/2006 | DWG NUMBER 2707 - 122A | 0

6 - GUSSET_PL - 122A

No to SHIP	SHIP MARK	No PIECES	PIECE MARKS	DESCRIPTION	LENGTH	GRADE	REMARKS	WEIGHT	ADVANCE BILL
6	122A			GUSSET_PL				453	
		6	122A	PL7/8X34 3/16	4'-5 1/2"	AASHTO M 270 GR. 50		453	

PRO DRAFT INC. PDI# 676 : PH:(604)589-6425
DRAWINGS PREPARED ON 3D-Xsteel File Name :- A [123.A]
Model Name: 725_102_TOLT_BRIDGE_541
Plot Date: 09/10/2006 12:19:23

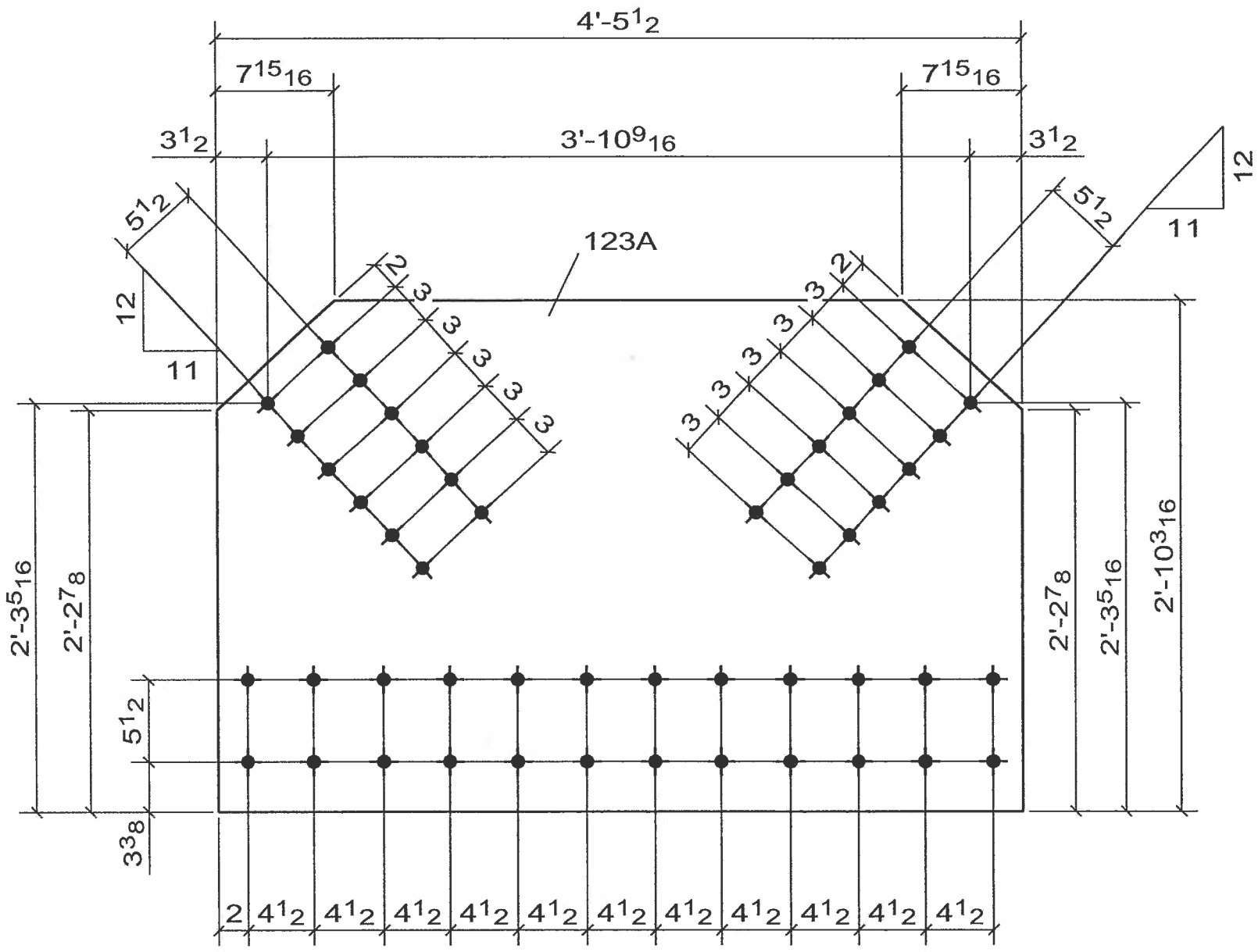

☒ CONFORMS TO DESIGN CONCEPT
☐ CONFORMS TO DESIGN CONCEPT WITH REVISIONS AS SHOWN
☐ NON-CONFORMING–REVISE & RESUBMIT

THIS SHOP DRAWING HAS BEEN REVIEWED FOR GENERAL CONFORMANCE WITH DESIGN CONCEPT ONLY AND DOES NOT RELIEVE THE FABRICATOR/VENDOR OF RESPONSIBLITY FOR CONFORMANCE WITH DESIGN DRAWINGS AND SPECIFICATIONS ALL OF WHICH HAVE PRIORITY OVER THIS SHOP DRAWING.

By A.F. Date 10-13-06

LIN & ASSOCIATES, INC.

WELD NOTE FOR ANY ASSEMBLY REQUIRING TACK WELDS:
- ALL TACK WELDS ARE TO BE MADE IN THE WELD JOINT ONLY

4 - GUSSET_PL - 123A

No to SHIP	SHIP MARK	No PIECES	PIECE MARKS	DESCRIPTION	LENGTH	GRADE	REMARKS	WEIGHT	ADVANCE BILL
4	123A			GUSSET_PL				453	
		4	123A	PL7/8X34 3/16	4'-5 1/2"	AASHTO M 270 GR. 50		453	

CONTRACTOR NOTE:
THIS DRAWING IS BEING SUBMITTED FOR APPROVAL AS REQUIRED. VERIFY OR SUPPLY ALL QUANTITIES, ALL DIMENSIONS, ALL INFORMATION, & ALL CONFIGURATIONS.

PRINT RECORD

NO.	USE	DATE
	APPR.	
	APPR.	
	PURCH	
	FAB	
	FAB. OFFICE	
	Q.A.	
	DIST.	
	ERECT.	

OPEN HOLES: 15/16 Ø U/N
WELD: BRIDGE WELDING CODE: D1.5
STEEL: AS NOTED
BOLTS:
SURFACE PREP-SP:
PAINT: SEE SPECS
REF.DRAWING: E2, E3

REV	DATE	DESCRIPTION	
0	SEP/10/06	FOR APPROVAL	VS

RAINIER WELDING

19020 NE 84TH STREET - REDMOND, WA 98053
(425) 868-1300 FAX (425) 868-8872
STEEL AND ALUMINUM FABRICATING

PROJECT: TOLT BRIDGE No 1834A
THIS DRAWING INCLUDES:
FOR: SNOHOMISH COUNTY OFFICIAL

DRAWN DJ DATE 07/31/2006 | CHK DSC DATE 09/10/2006 | DWG NUMBER 2707 - 123A | 0

PRO DRAFT INC. PD# 676 : PH:(604)589-6425
DRAWINGS PREPARED ON 3D-Xsteel File Name :- A [124.A]
Model Name: 725_102_TOLT_BRIDGE_541
Plot Date: 09/10/2006 12:19:24

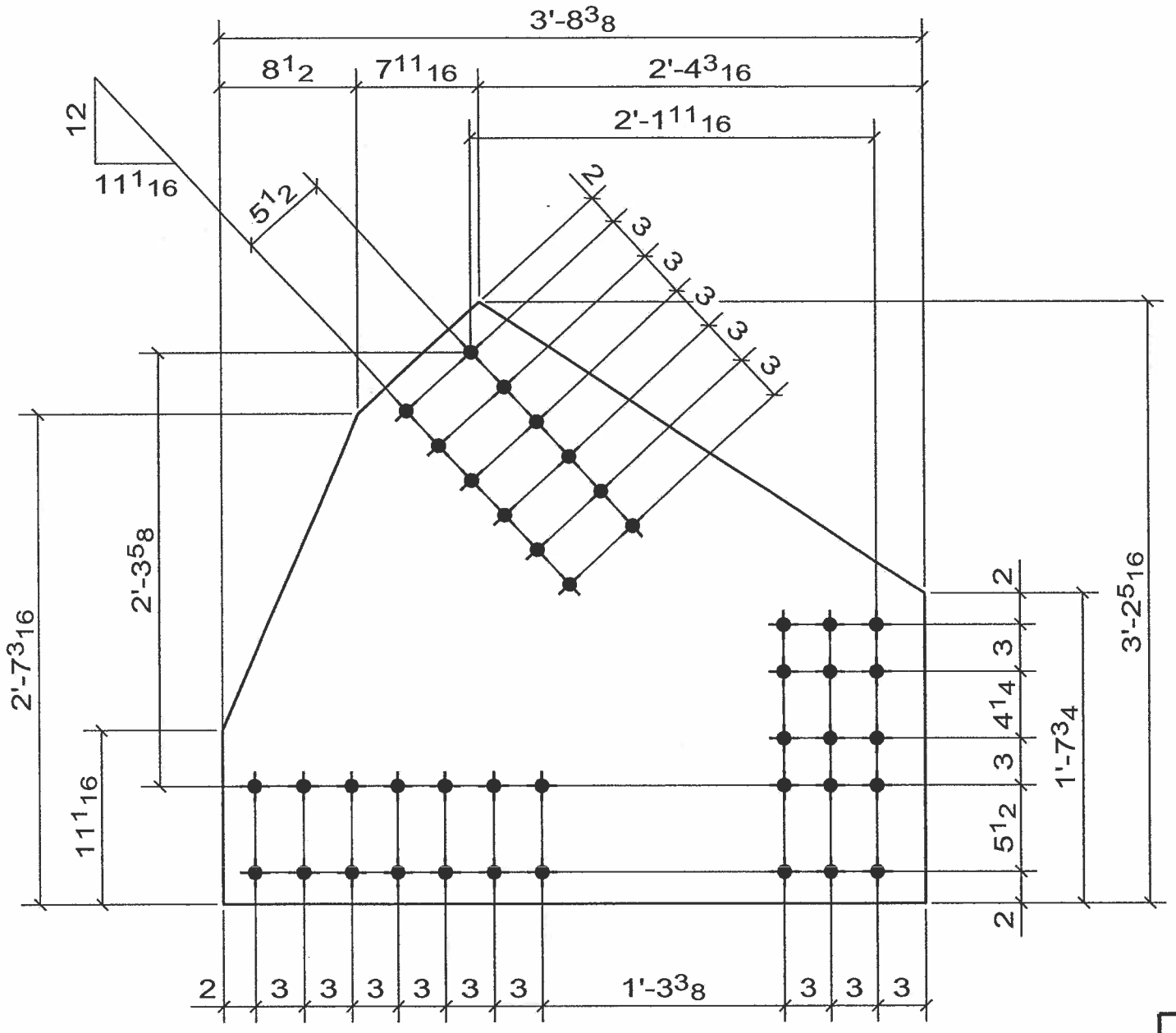

CONFORMS TO DESIGN CONCEPT
☐ CONFORMS TO DESIGN CONCEPT WITH REVISIONS AS SHOWN
☐ NON-CONFORMING–REVISE & RESUBMIT
THIS SHOP DRAWING HAS BEEN REVIEWED FOR GENERAL CONFORMANCE WITH DESIGN CONCEPT ONLY AND DOES NOT RELIEVE THE FABRICATOR/VENDOR OF RESPONSIBLITY FOR CONFORMANCE WITH DESIGN DRAWINGS AND SPECIFICATIONS ALL OF WHICH HAVE PRIORITY OVER THIS SHOP DRAWING.
By A.F. Date 10-13-06
LIN & ASSOCIATES, INC.

WELD NOTE FOR ANY ASSEMBLY REQUIRING TACK WELDS:
- ALL TACK WELDS ARE TO BE MADE IN THE WELD JOINT ONLY

CONTRACTOR NOTE:
THIS DRAWING IS BEING SUBMITTED FOR APPROVAL AS REQUIRED. VERIFY OR SUPPLY ALL QUANTITIES, ALL DIMENSIONS, ALL INFORMATION, & ALL CONFIGURATIONS.

PRINT RECORD			OPEN HOLES 15/16 Ø U/N
NO.	USE	DATE	WELD BRIDGE WELDING CODE: D1.5
	APPR.		STEEL AS NOTED
	APPR.		BOLTS
	PURCH		SURFACE PREP-SP
	FAB		PAINT SEE SPECS
	FAB. OFFICE		REF.DRAWING
	Q.A.		
	DIST.		
	ERECT.		

REV	DATE	DESCRIPTION	
0	SEP/10/06	FOR APPROVAL	VS

RAINIER WELDING

19020 NE 84TH STREET - REDMOND, WA 98053
(425) 868-1300 FAX (425) 868-8872
STEEL AND ALUMINUM FABRICATING

PROJECT TOLT BRIDGE No 1834A
THIS DRAWING INCLUDES
FOR SNOHOMISH COUNTY OFFICIAL
DRAWN DJ DATE 07/31/2006 CHK DSC DATE 09/10/2006 DWG NUMBER 2707 - 124A △0

3 - GUSSET_PL -124A

No to SHIP	SHIP MARK	No PIECES	PIECE MARKS	DESCRIPTION	LENGTH	GRADE	REMARKS	WEIGHT	ADVANCE BILL
3	124A			GUSSET_PL				422	
		3	124A	PL7/8X38 5/16	3'-8 3/8"	AASHTO M 270 GR. 50	FCM/V	422	

PRO DRAFT INC. PDI# 676 : PH:(604)589-6425
DRAWINGS PREPARED ON 3D-Xsteel File Name :- A [125.A]
Model Name: 725_102_TOLT_BRIDGE_541
Plot Date: 09/10/2006 12:19:26

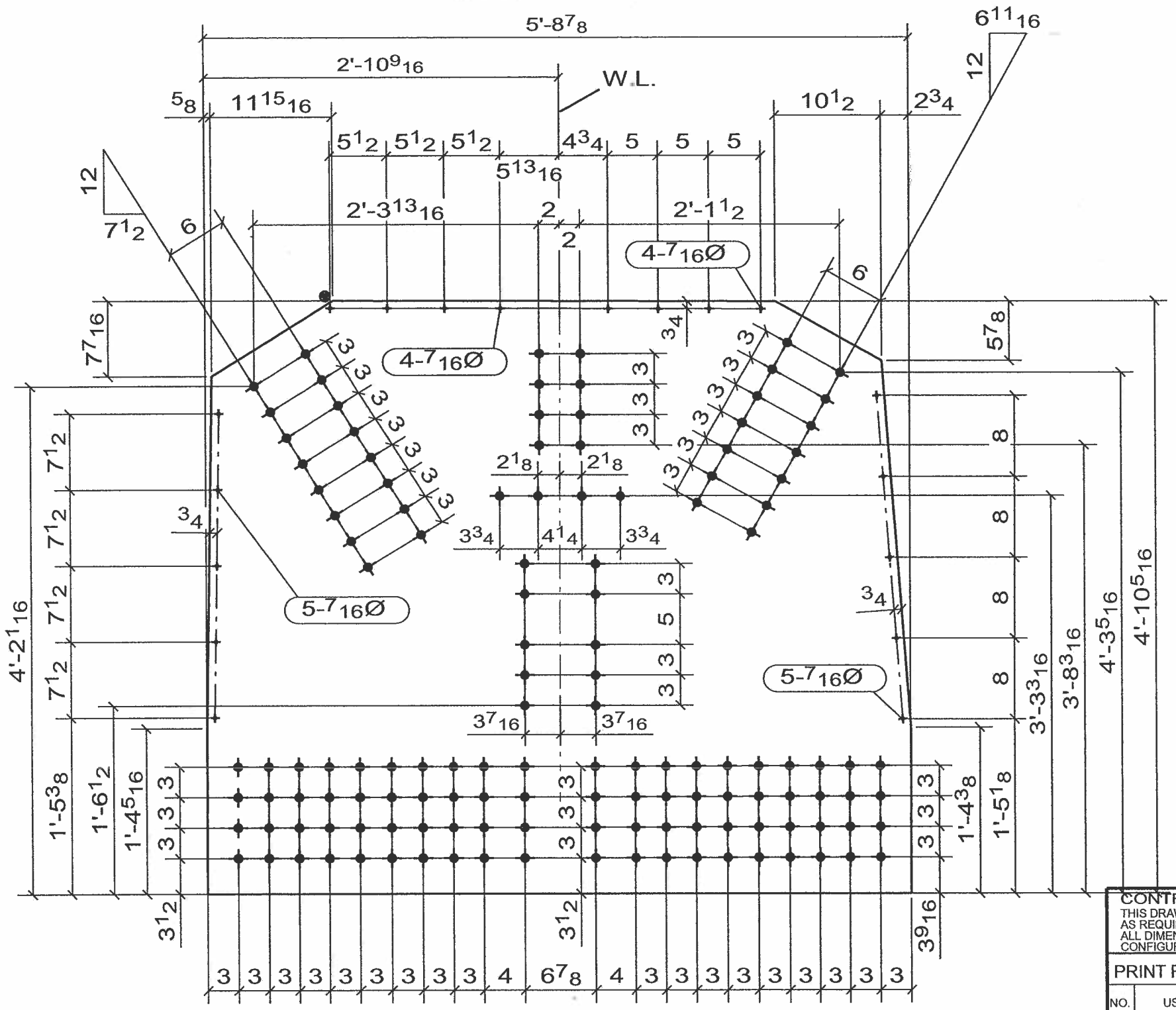

4 - GUSSET_PL - 125A

No to SHIP	SHIP MARK	No PIECES	PIECE MARKS	DESCRIPTION	LENGTH	GRADE	REMARKS	WEIGHT	ADVANCE BILL
4	125A			GUSSET_PL				998	
		4	125A	PL7/8X58 7/16	5'-8 15/16"	AASHTO M 270 GR. 50	FCM/V	998	

CONTRACTOR NOTE:
THIS DRAWING IS BEING SUBMITTED FOR APPROVAL AS REQUIRED. VERIFY OR SUPPLY ALL QUANTITIES, ALL DIMENSIONS, ALL INFORMATION, & ALL CONFIGURATIONS.

PRINT RECORD

NO.	USE	DATE
	APPR.	
	APPR.	
	PURCH	
	FAB	
	FAB. OFFICE	
	Q.A.	
	DIST.	
	ERECT.	

OPEN HOLES 15/16 Ø U/N.
WELD BRIDGE WELDING CODE: D1.5
STEEL AS NOTED
BOLTS
SURFACE PREP-SP
PAINT SEE SPECS
REF.DRAWING E6, E7, E8, E9

☒ CONFORMS TO DESIGN CONCEPT
☐ CONFORMS TO DESIGN CONCEPT WITH REVISIONS AS SHOWN
☐ NON-CONFORMING–REVISE & RESUBMIT
THIS SHOP DRAWING HAS BEEN REVIEWED FOR GENERAL CONFORMANCE WITH DESIGN CONCEPT ONLY AND DOES NOT RELIEVE THE FABRICATOR/VENDOR OF RESPONSIBLITY FOR CONFORMANCE WITH DESIGN DRAWINGS AND SPECIFICATIONS ALL OF WHICH HAVE PRIORITY OVER THIS SHOP DRAWING.
By A.F. Date 10-13-06
I.IN & ASSOCIATES, INC.

WELD NOTE FOR ANY ASSEMBLY REQUIRING TACK WELDS:
- ALL TACK WELDS ARE TO BE MADE IN THE WELD JOINT ONLY

REV	DATE	DESCRIPTION	
0	SEP/10/06	FOR APPROVAL	VS

RAINIER WELDING

19020 NE 84TH STREET - REDMOND, WA 98053
(425) 868-1300 FAX (425) 868-8872
STEEL AND ALUMINUM FABRICATING

PROJECT TOLT BRIDGE No 1834A
THIS DRAWING INCLUDES
FOR SNOHOMISH COUNTY OFFICIAL
DRAWN DJ DATE 07/31/2006 CHK DSC DATE 09/10/2006 DWG NUMBER 2707 - 125A △0

PRO DRAFT INC. PDI# 676 : PH:(604)589-6425
DRAWINGS PREPARED ON 3D-Xsteel File Name :- A [126.A]
Model Name: 725_102_TOLT_BRIDGE_541
Plot Date: 09/10/2006 12:19:28

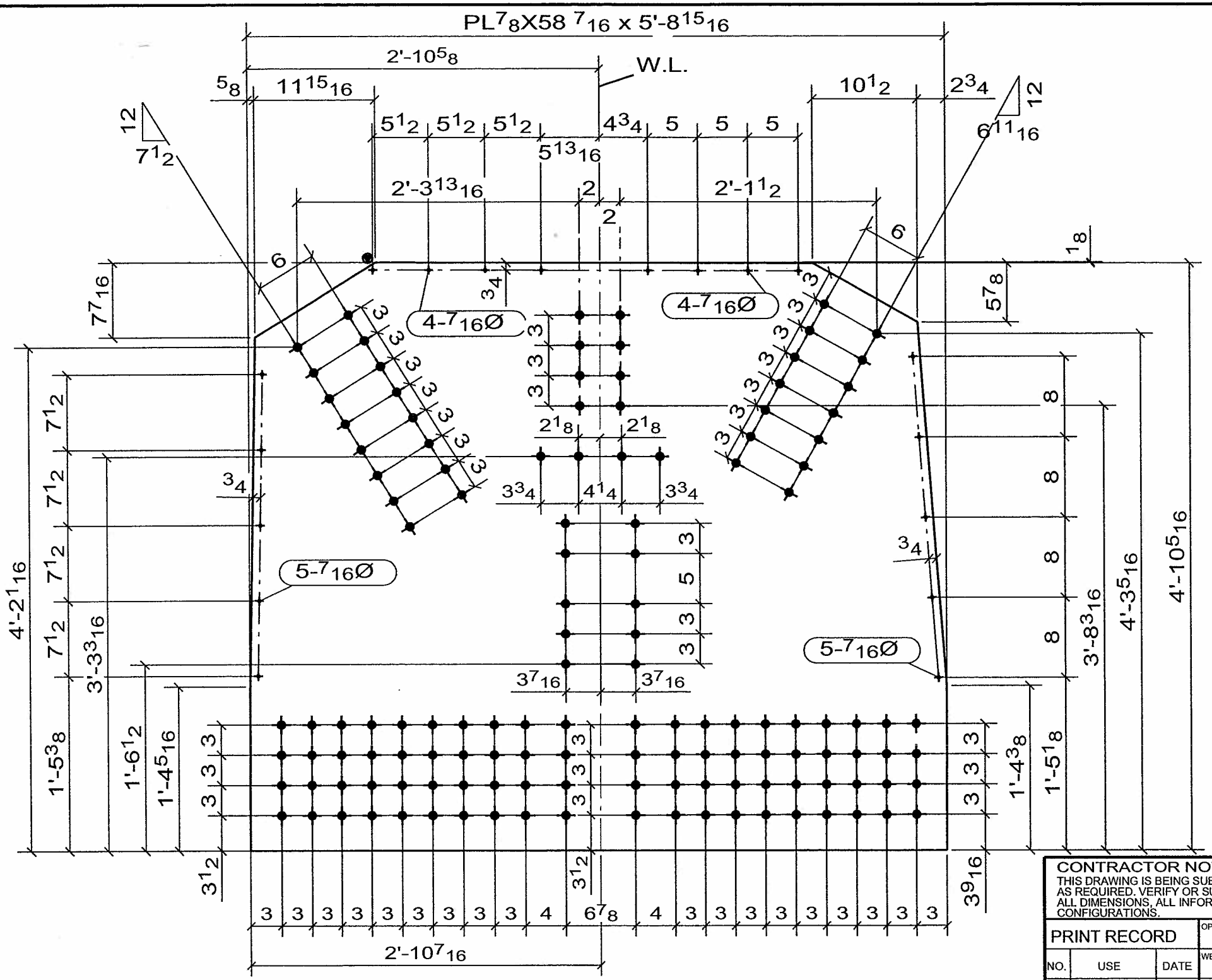

2 - GUSSET_PL -126A

No to SHIP	SHIP MARK	No PIECES	PIECE MARKS	DESCRIPTION	LENGTH	GRADE	REMARKS	WEIGHT	ADVANCE BILL
2	126A			GUSSET_PL				998	
		2	126A	PL7/8X58 7/16	5'-8 15/16"	AASHTO M 270 GR. 50	FCM/V	998	

CONTRACTOR NOTE:
THIS DRAWING IS BEING SUBMITTED FOR APPROVAL AS REQUIRED. VERIFY OR SUPPLY ALL QUANTITIES, ALL DIMENSIONS, ALL INFORMATION, & ALL CONFIGURATIONS.

PRINT RECORD

NO.	USE	DATE
	APPR.	
	APPR.	
	PURCH	
	FAB	
	FAB. OFFICE	
	Q.A.	
	DIST.	
	ERECT.	

OPEN HOLES: 15/16 Ø U/N
WELD: BRIDGE WELDING CODE: D1.5
STEEL: AS NOTED
BOLTS:
SURFACE PREP-SP:
PAINT: SEE SPECS
REF.DRAWING: E6, E9

☒ CONFORMS TO DESIGN CONCEPT
☐ CONFORMS TO DESIGN CONCEPT WITH REVISIONS AS SHOWN
☐ NON-CONFORMING–REVISE & RESUBMIT

THIS SHOP DRAWING HAS BEEN REVIEWED FOR GENERAL CONFORMANCE WITH DESIGN CONCEPT ONLY AND DOES NOT RELIEVE THE FABRICATOR/VENDOR OF RESPONSIBLITY FOR CONFORMANCE WITH DESIGN DRAWINGS AND SPECIFICATIONS ALL OF WHICH HAVE PRIORITY OVER THIS SHOP DRAWING.

By A.F. Date 10-13-06

LIN & ASSOCIATES, INC.

WELD NOTE FOR ANY ASSEMBLY REQUIRING TACK WELDS:
- ALL TACK WELDS ARE TO BE MADE IN THE WELD JOINT ONLY

REV	DATE	DESCRIPTION	
0	SEP/10/06	FOR APPROVAL	VS

RAINIER WELDING

19020 NE 84TH STREET - REDMOND, WA 98053
(425) 868-1300 FAX (425) 868-8872
STEEL AND ALUMINUM FABRICATING

PROJECT: TOLT BRIDGE No 1834A
THIS DRAWING INCLUDES:
FOR: SNOHOMISH COUNTY OFFICIAL

DRAWN DJ DATE 07/31/2006 | CHK DSC DATE 09/10/2006 | DWG NUMBER 2707 - 126A | 0

PRO DRAFT INC. PDI# 676 : PH:(604)589-6425
DRAWINGS PREPARED ON 3D-Xsteel File Name :- A [127.A]
Model Name: 725_102_TOLT_BRIDGE_541
Plot Date: 09/10/2006 12:19:30

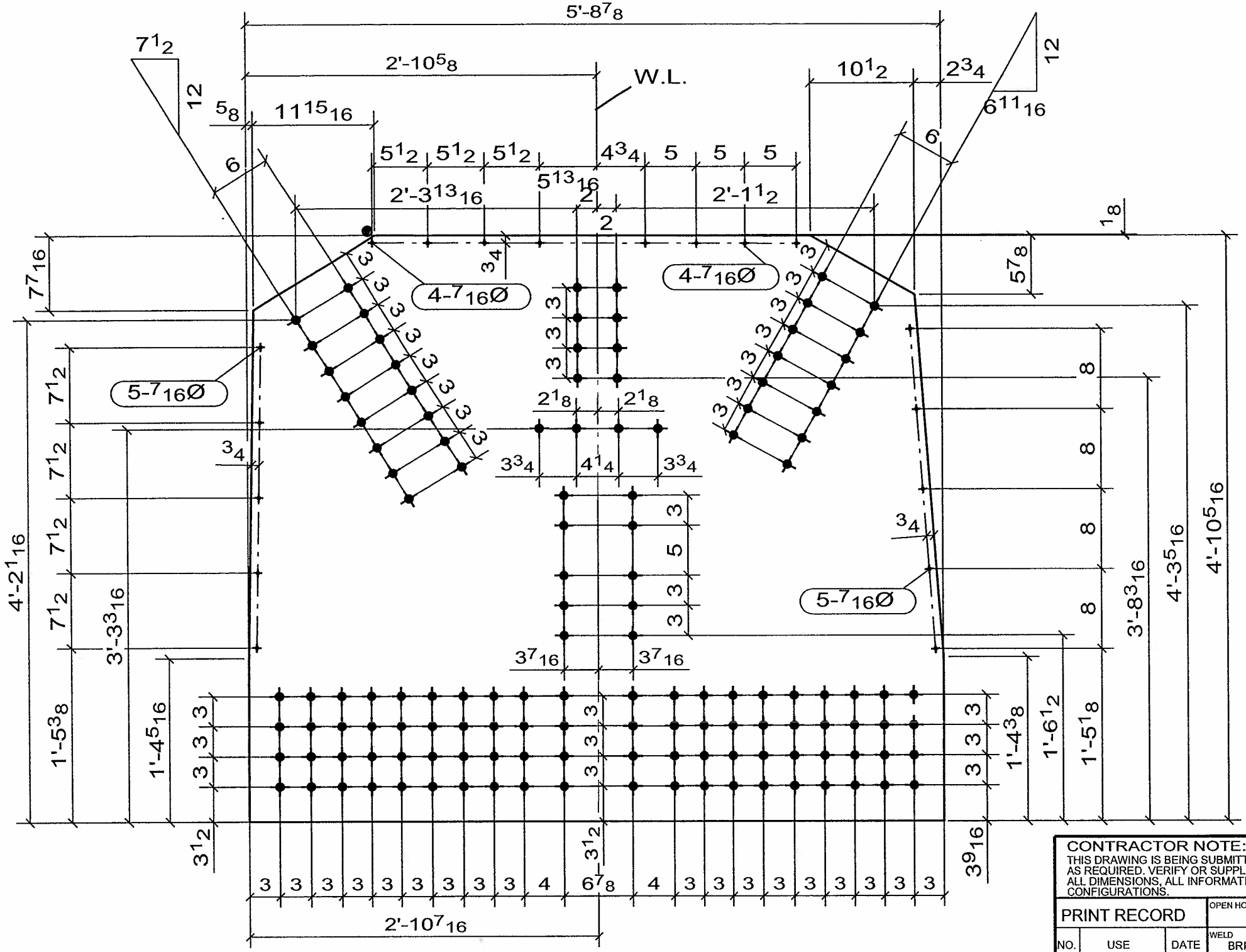

☒ CONFORMS TO DESIGN CONCEPT
☐ CONFORMS TO DESIGN CONCEPT WITH REVISIONS AS SHOWN
☐ NON-CONFORMING–REVISE & RESUBMIT

THIS SHOP DRAWING HAS BEEN REVIEWED FOR GENERAL CONFORMANCE WITH DESIGN CONCEPT ONLY AND DOES NOT RELIEVE THE FABRICATOR/VENDOR OF RESPONSIBLITY FOR CONFORMANCE WITH DESIGN DRAWINGS AND SPECIFICATIONS ALL OF WHICH HAVE PRIORITY OVER THIS SHOP DRAWING.

By A.F Date 10-13-06

LIN & ASSOCIATES, INC.

WELD NOTE FOR ANY ASSEMBLY REQUIRING TACK WELDS:
- ALL TACK WELDS ARE TO BE MADE IN THE WELD JOINT ONLY

CONTRACTOR NOTE:
THIS DRAWING IS BEING SUBMITTED FOR APPROVAL AS REQUIRED. VERIFY OR SUPPLY ALL QUANTITIES, ALL DIMENSIONS, ALL INFORMATION, & ALL CONFIGURATIONS.

PRINT RECORD

NO.	USE	DATE
	APPR.	
	APPR.	
	PURCH	
	FAB	
	FAB. OFFICE	
	Q.A.	
	DIST.	
	ERECT.	

OPEN HOLES: 15/16 Ø U/N
WELD: BRIDGE WELDING CODE: D1.5
STEEL: AS NOTED
BOLTS:
SURFACE PREP-SP:
PAINT: SEE SPECS
REF.DRAWING: E7, E8

REV	DATE	DESCRIPTION	
0	SEP/10/06	FOR APPROVAL	VS

RAINIER WELDING

19020 NE 84TH STREET - REDMOND, WA 98053
(425) 868-1300 FAX (425) 868-8872
STEEL AND ALUMINUM FABRICATING

PROJECT: TOLT BRIDGE No 1834A
THIS DRAWING INCLUDES:
FOR: SNOHOMISH COUNTY OFFICIAL

DRAWN DJ DATE 07/31/2006 | CHK DSC DATE 09/10/2006 | DWG NUMBER 2707 - 127A | 0

2 - GUSSET_PL -127A

No to SHIP	SHIP MARK	No PIECES	PIECE MARKS	DESCRIPTION	LENGTH	GRADE	REMARKS	WEIGHT	ADVANCE BILL
2	127A			GUSSET_PL				998	
		2	127A	PL7/8X58 7/16	5'-8 15/16"	AASHTO M 270 GR. 50	FCM/V	998	

PRO DRAFT INC. PDI# 676 : PH:(604)589-6425
DRAWINGS PREPARED ON 3D-Xsteel File Name :- A [130.A]
Model Name: 725_102_TOLT_BRIDGE_541
Plot Date: 09/10/2006 12:19:33

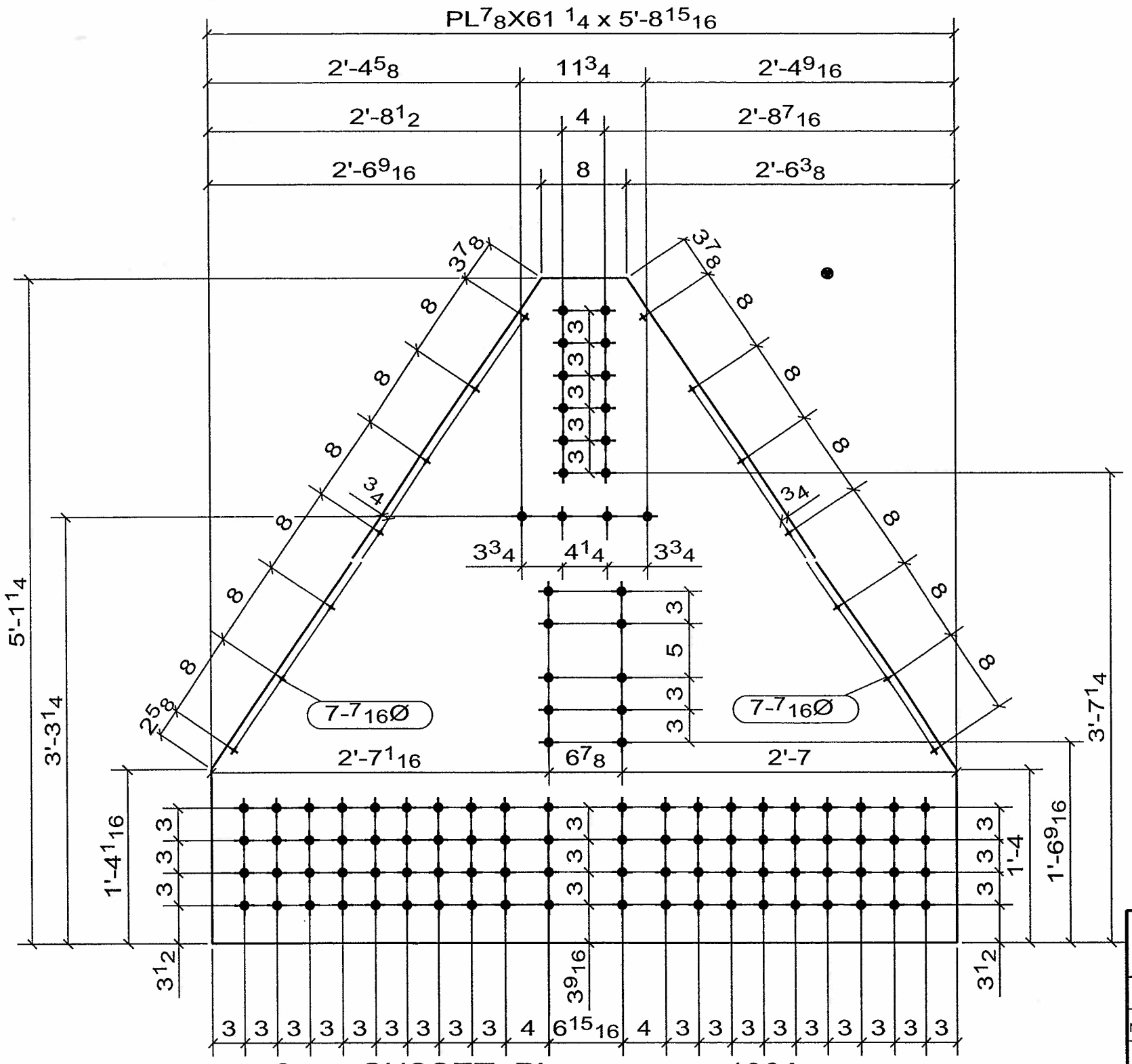

2 - GUSSET_PL -130A

No to SHIP	SHIP MARK	No PIECES	PIECE MARKS	DESCRIPTION	LENGTH	GRADE	REMARKS	WEIGHT	ADVANCE BILL
2	130A			GUSSET_PL				1046	
		2	130A	PL7/8X61 1/4	5'-8 15/16"	AASHTO M 270 GR. 50	FCM/V	1046	

☒ CONFORMS TO DESIGN CONCEPT
☐ CONFORMS TO DESIGN CONCEPT WITH REVISIONS AS SHOWN
☐ NON-CONFORMING–REVISE & RESUBMIT

THIS SHOP DRAWING HAS BEEN REVIEWED FOR GENERAL CONFORMANCE WITH DESIGN CONCEPT ONLY AND DOES NOT RELIEVE THE FABRICATOR/VENDOR OF RESPONSIBLITY FOR CONFORMANCE WITH DESIGN DRAWINGS AND SPECIFICATIONS ALL OF WHICH HAVE PRIORITY OVER THIS SHOP DRAWING.

By A.F. Date 10-13-06

LIN & ASSOCIATES, INC.

WELD NOTE FOR ANY ASSEMBLY REQUIRING TACK WELDS:
- ALL TACK WELDS ARE TO BE MADE IN THE WELD JOINT ONLY

CONTRACTOR NOTE:
THIS DRAWING IS BEING SUBMITTED FOR APPROVAL AS REQUIRED. VERIFY OR SUPPLY ALL QUANTITIES, ALL DIMENSIONS, ALL INFORMATION, & ALL CONFIGURATIONS.

PRINT RECORD

NO.	USE	DATE
	APPR.	
	APPR.	
	PURCH	
	FAB	
	FAB. OFFICE	
	Q.A.	
	DIST.	
	ERECT.	

OPEN HOLES: 15/16 Ø U/N
WELD: BRIDGE WELDING CODE: D1.5
STEEL: AS NOTED
BOLTS:
SURFACE PREP-SP:
PAINT: SEE SPECS
REF.DRAWING: E7, E9

REV	DATE	DESCRIPTION	
0	SEP/10/06	FOR APPROVAL	VS

RAINIER WELDING

19020 NE 84TH STREET - REDMOND, WA 98053
(425) 868-1300 FAX (425) 868-8872
STEEL AND ALUMINUM FABRICATING

PROJECT: TOLT BRIDGE No 1834A
THIS DRAWING INCLUDES:
FOR: SNOHOMISH COUNTY OFFICIAL

DRAWN DJ DATE 07/31/2006 | CHK DSC DATE 09/10/2006 | DWG NUMBER 2707 - 130A △0

PRO DRAFT INC PDI# 676 : PH:(604)589-6425
DRAWINGS PREPARED ON 3D-Xsteel File Name :- A [131.A]
Model Name: 725_102_TOLT_BRIDGE_541
Plot Date: 09/10/2006 12:19:35

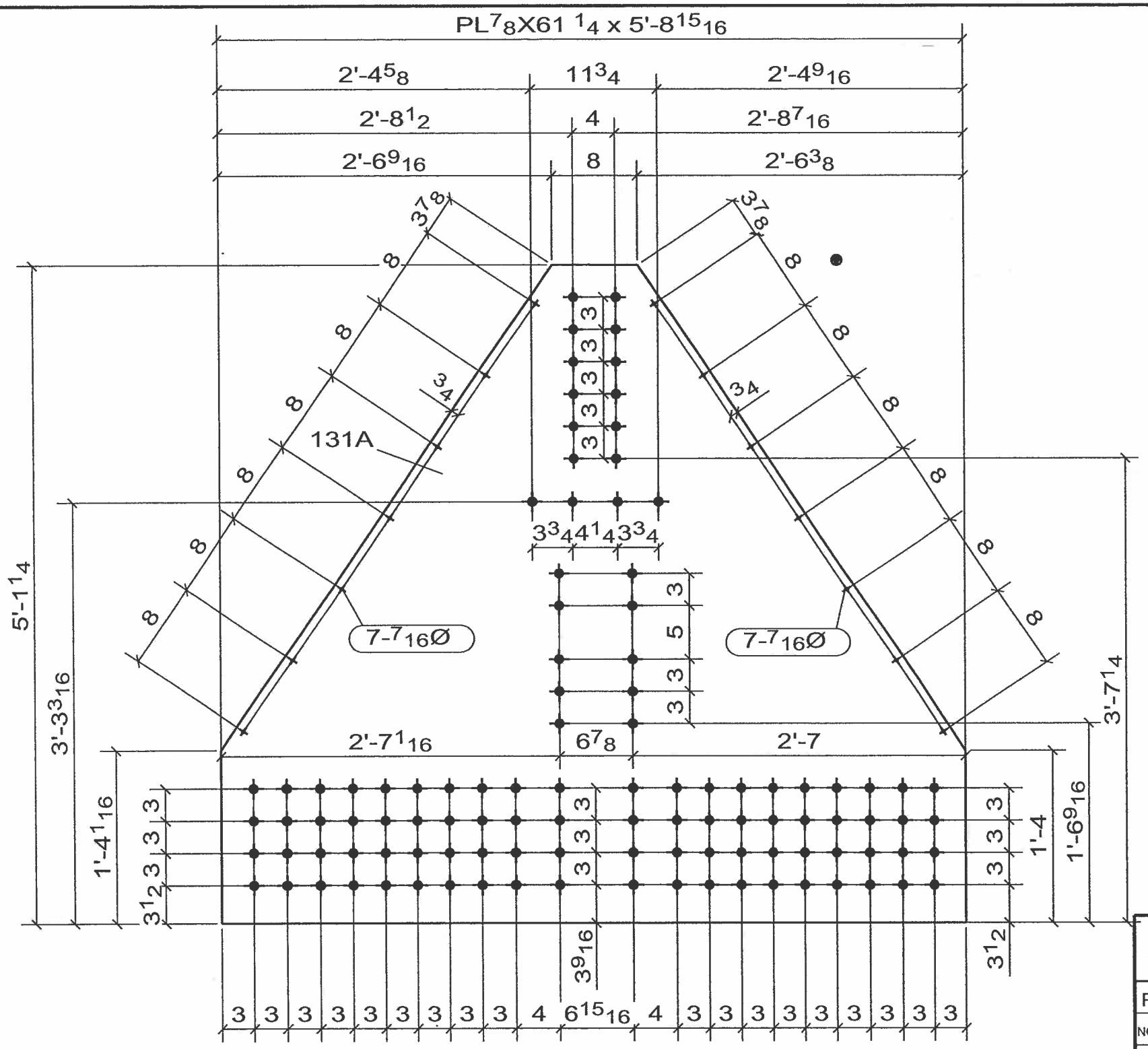

2 - GUSSET_PL -131A

No to SHIP	SHIP MARK	No PIECES	PIECE MARKS	DESCRIPTION	LENGTH	GRADE	REMARKS	WEIGHT	ADVANCE BILL
2	131A			GUSSET_PL				1046	
		2	131A	PL7/8X61 1/4	5'-8 15/16"	AASHTO M 270 GR. 50	FCM/V	1046	

CONTRACTOR NOTE:
THIS DRAWING IS BEING SUBMITTED FOR APPROVAL AS REQUIRED. VERIFY OR SUPPLY ALL QUANTITIES, ALL DIMENSIONS, ALL INFORMATION, & ALL CONFIGURATIONS.

PRINT RECORD

NO.	USE	DATE
	APPR.	
	APPR.	
	PURCH	
	FAB	
	FAB. OFFICE	
	Q.A.	
	DIST.	
	ERECT.	

OPEN HOLES 15/16 Ø U/N
WELD BRIDGE WELDING CODE: D1.5
STEEL AS NOTED
BOLTS
SURFACE PREP-SP
PAINT SEE SPECS
REF.DRAWING E7, E9

☒ CONFORMS TO DESIGN CONCEPT
☐ CONFORMS TO DESIGN CONCEPT WITH REVISIONS AS SHOWN
☐ NON-CONFORMING-REVISE & RESUBMIT
THIS SHOP DRAWING HAS BEEN REVIEWED FOR GENERAL CONFORMANCE WITH DESIGN CONCEPT ONLY AND DOES NOT RELIEVE THE FABRICATOR/VENDOR OF RESPONSIBLITY FOR CONFORMANCE WITH DESIGN DRAWINGS AND SPECIFICATIONS ALL OF WHICH HAVE PRIORITY OVER THIS SHOP DRAWING.
By A. F. Date 10-13-06
LIN & ASSOCIATES, INC.

WELD NOTE FOR ANY ASSEMBLY REQUIRING TACK WELDS:
- ALL TACK WELDS ARE TO BE MADE IN THE WELD JOINT ONLY

REV	DATE	DESCRIPTION	
0	SEP/10/06	FOR APPROVAL	VS

RAINIER WELDING

19020 NE 84TH STREET - REDMOND, WA 98053
(425) 868-1300 FAX (425) 868-8872
STEEL AND ALUMINUM FABRICATING

PROJECT TOLT BRIDGE No 1834A
THIS DRAWING INCLUDES
FOR SNOHOMISH COUNTY OFFICIAL
DRAWN DJ DATE 07/31/2006
CHK DSC DATE 09/10/2006
DWG NUMBER 2707 - 131A
0

PRO DRAFT INC. PDI# 676 : PH:(604)589-6425
DRAWINGS PREPARED ON 3D-Xsteel File Name :- A [132.A]
Model Name: 725_102_TOLT_BRIDGE_541
Plot Date: 09/10/2006 12:19:37

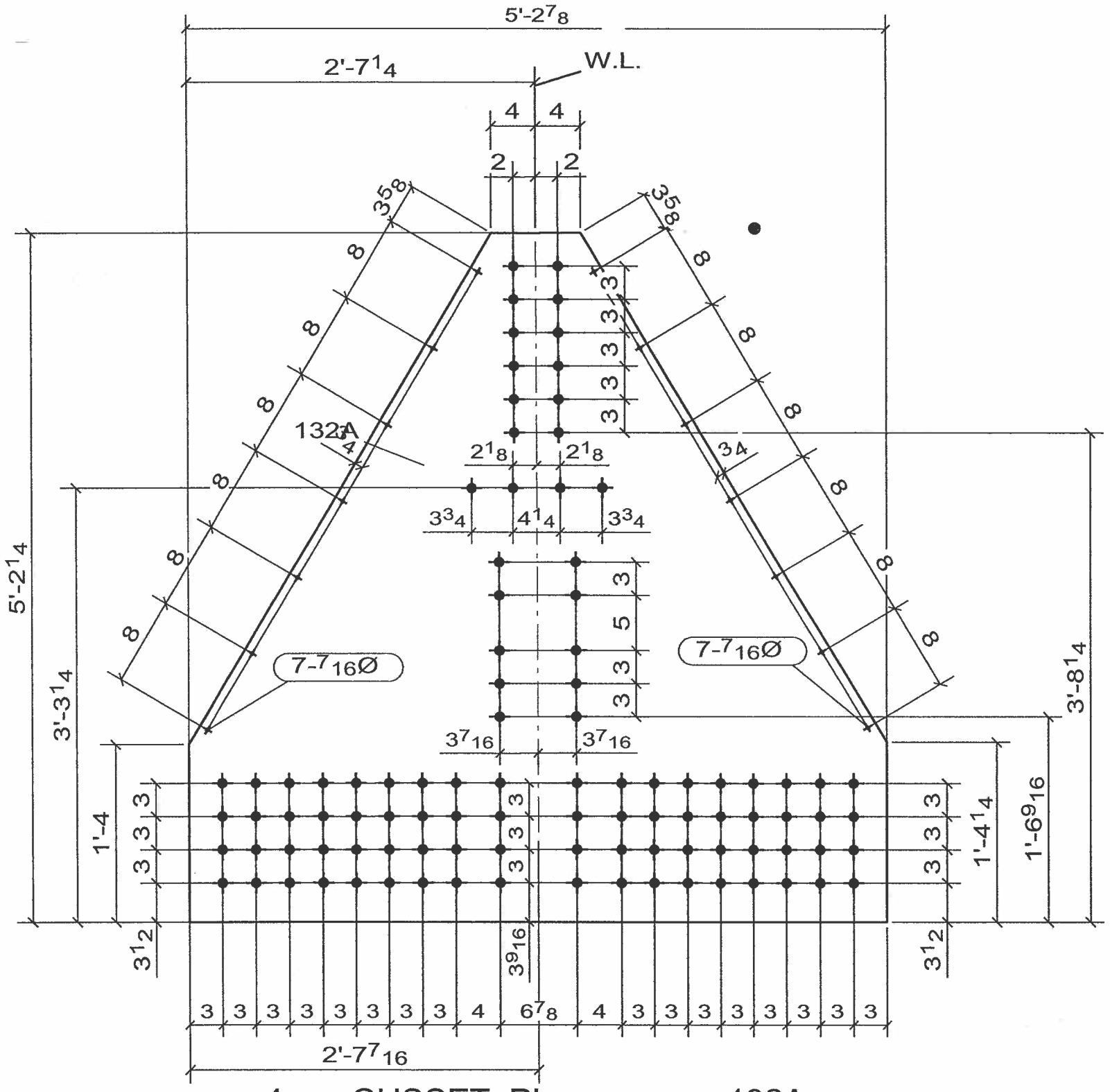

4 - GUSSET_PL -132A

No to SHIP	SHIP MARK	No PIECES	PIECE MARKS	DESCRIPTION	LENGTH	GRADE	REMARKS	WEIGHT	ADVANCE BILL
4	132A			GUSSET_PL				970	
		4	132A	PL7/8X62 1/4	5'-2 7/8"	AASHTO M 270 GR. 50	FCM/V	970	

☒ CONFORMS TO DESIGN CONCEPT
☐ CONFORMS TO DESIGN CONCEPT WITH REVISIONS AS SHOWN
☐ NON-CONFORMING–REVISE & RESUBMIT

THIS SHOP DRAWING HAS BEEN REVIEWED FOR GENERAL CONFORMANCE WITH DESIGN CONCEPT ONLY AND DOES NOT RELIEVE THE FABRICATOR/VENDOR OF RESPONSIBLITY FOR CONFORMANCE WITH DESIGN DRAWINGS AND SPECIFICATIONS ALL OF WHICH HAVE PRIORITY OVER THIS SHOP DRAWING.

By A.F. Date 10-13-06

LIN & ASSOCIATES, INC.

WELD NOTE FOR ANY ASSEMBLY REQUIRING TACK WELDS:
- ALL TACK WELDS ARE TO BE MADE IN THE WELD JOINT ONLY

CONTRACTOR NOTE:
THIS DRAWING IS BEING SUBMITTED FOR APPROVAL AS REQUIRED. VERIFY OR SUPPLY ALL QUANTITIES, ALL DIMENSIONS, ALL INFORMATION, & ALL CONFIGURATIONS.

PRINT RECORD

NO.	USE	DATE
	APPR.	
	APPR.	
	PURCH	
	FAB	
	FAB. OFFICE	
	Q.A.	
	DIST.	
	ERECT.	

OPEN HOLES 15/16 Ø U/N
WELD BRIDGE WELDING CODE: D1.5
STEEL AS NOTED
BOLTS
SURFACE PREP-SP
PAINT SEE SPECS
REF.DRAWING E6, E7, E8, E9

REV	DATE	DESCRIPTION	
0	SEP/10/06	FOR APPROVAL	VS

RAINIER WELDING

19020 NE 84TH STREET - REDMOND, WA 98053
(425) 868-1300 FAX (425) 868-8872
STEEL AND ALUMINUM FABRICATING

PROJECT TOLT BRIDGE No 1834A
THIS DRAWING INCLUDES
FOR SNOHOMISH COUNTY OFFICIAL

DRAWN DJ DATE 07/31/2006 | CHK DSC DATE 09/10/2006 | DWG NUMBER 2707 - 132A △0

PRO DRAFT INC. PDI# 676 : PH:(604)589-6425
DRAWINGS PREPARED ON 3D-Xsteel File Name :- A [133.A]
Model Name: 725_102_TOLT_BRIDGE_541
Plot Date: 09/10/2006 12:19:39

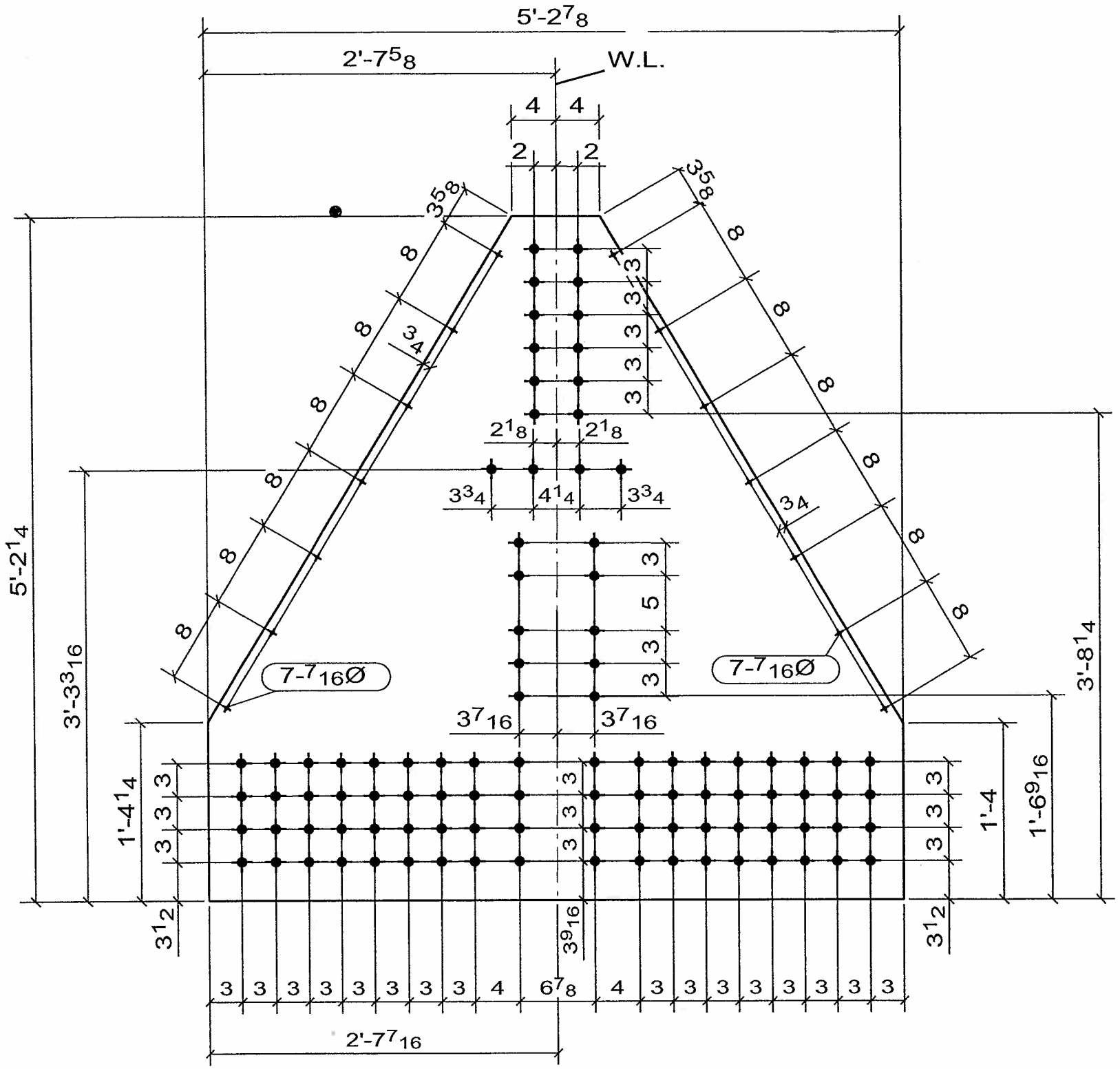

2 - GUSSET_PL -133A

No to SHIP	SHIP MARK	No PIECES	PIECE MARKS	DESCRIPTION	LENGTH	GRADE	REMARKS	WEIGHT	ADVANCE BILL
2	133A			GUSSET_PL				970	
		2	133A	PL7/8X62 1/4	5'-2 7/8"	AASHTO M 270 GR. 50	FCM/V	970	

CONTRACTOR NOTE:
THIS DRAWING IS BEING SUBMITTED FOR APPROVAL AS REQUIRED. VERIFY OR SUPPLY ALL QUANTITIES, ALL DIMENSIONS, ALL INFORMATION, & ALL CONFIGURATIONS.

PRINT RECORD

NO.	USE	DATE
	APPR.	
	APPR.	
	PURCH	
	FAB	
	FAB. OFFICE	
	Q.A.	
	DIST.	
	ERECT.	

OPEN HOLES 15/16 Ø U/N
WELD BRIDGE WELDING CODE: D1.5
STEEL AS NOTED
BOLTS
SURFACE PREP-SP
PAINT SEE SPECS
REF.DRAWING E6, E9

☒ CONFORMS TO DESIGN CONCEPT
☐ CONFORMS TO DESIGN CONCEPT WITH REVISIONS AS SHOWN
☐ NON-CONFORMING-REVISE & RESUBMIT

THIS SHOP DRAWING HAS BEEN REVIEWED FOR GENERAL CONFORMANCE WITH DESIGN CONCEPT ONLY AND DOES NOT RELIEVE THE FABRICATOR/VENDOR OF RESPONSIBLITY FOR CONFORMANCE WITH DESIGN DRAWINGS AND SPECIFICATIONS ALL OF WHICH HAVE PRIORITY OVER THIS SHOP DRAWING.

By A.F. Date 10-13-06

LIN & ASSOCIATES, INC.

WELD NOTE FOR ANY ASSEMBLY REQUIRING TACK WELDS:
- ALL TACK WELDS ARE TO BE MADE IN THE WELD JOINT ONLY

REV	DATE	DESCRIPTION	
0	SEP/10/06	FOR APPROVAL	VS

RAINIER WELDING

19020 NE 84TH STREET - REDMOND, WA 98053
(425) 868-1300 FAX (425) 868-8872
STEEL AND ALUMINUM FABRICATING

PROJECT TOLT BRIDGE No 1834A
THIS DRAWING INCLUDES
FOR SNOHOMISH COUNTY OFFICIAL

DRAWN DJ DATE 07/31/2006
CHK DSC DATE 09/10/2006
DWG NUMBER 2707 - 133A △0

PRO DRAFT INC. PDI# 676 : PH:(604)589-6425
DRAWINGS PREPARED ON 3D-Xsteel File Name :- A [134.A]
Model Name: 725_102_TOLT_BRIDGE_541
Plot Date: 09/10/2006 12:19:40

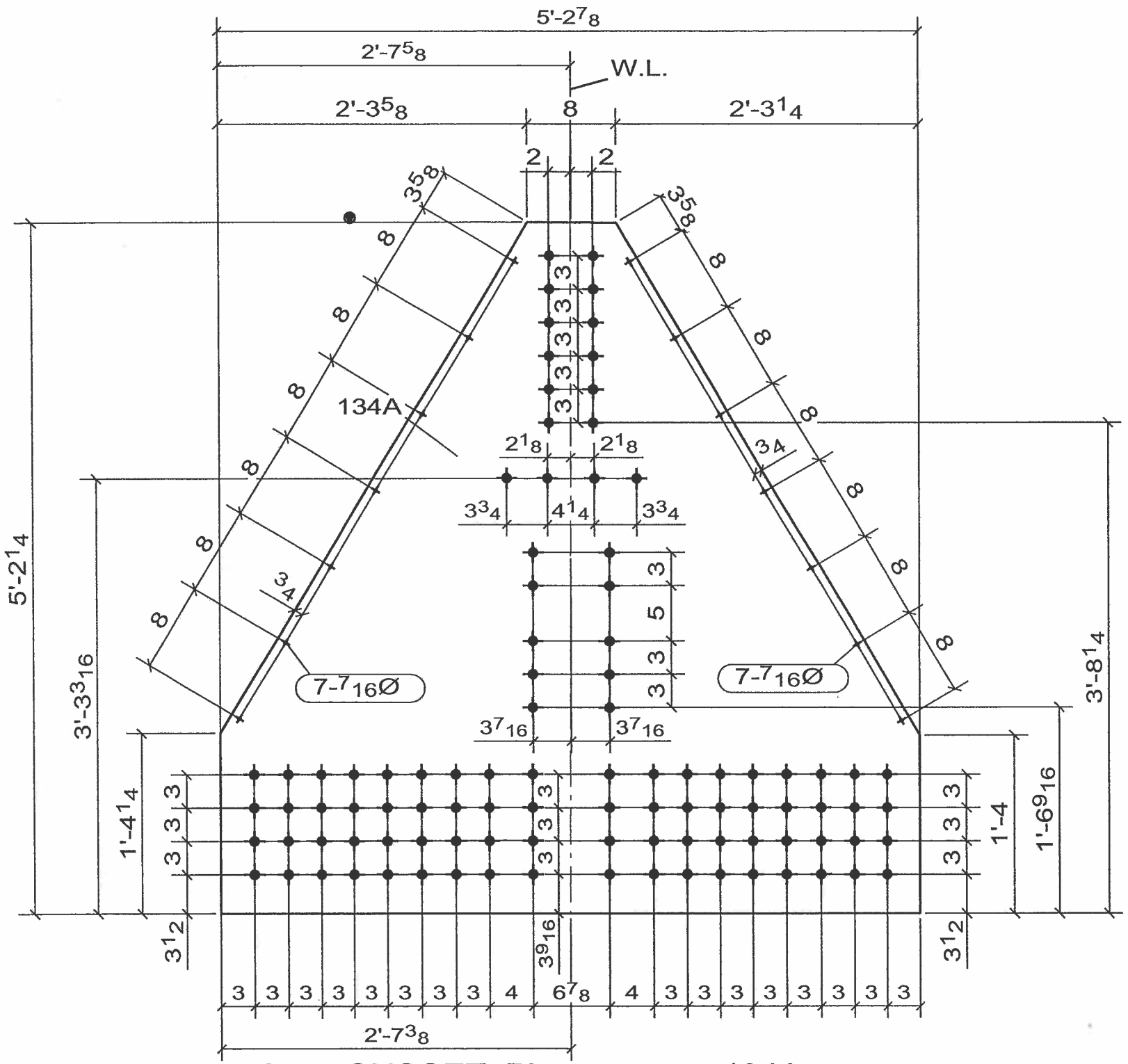

2 - GUSSET_PL -134A

No to SHIP	SHIP MARK	No PIECES	PIECE MARKS	DESCRIPTION	LENGTH	GRADE	REMARKS	WEIGHT	ADVANCE BILL
2	134A			GUSSET_PL				970	
		2	134A	PL7/8X62 1/4	5'-2 7/8"	AASHTO M 270 GR. 50	FCM/V	970	

CONTRACTOR NOTE:
THIS DRAWING IS BEING SUBMITTED FOR APPROVAL AS REQUIRED. VERIFY OR SUPPLY ALL QUANTITIES, ALL DIMENSIONS, ALL INFORMATION, & ALL CONFIGURATIONS.

PRINT RECORD

NO.	USE	DATE
	APPR.	
	APPR.	
	PURCH	
	FAB	
	FAB. OFFICE	
	Q.A.	
	DIST.	
	ERECT.	

OPEN HOLES 15/16 Ø U/N
WELD BRIDGE WELDING CODE: D1.5
STEEL AS NOTED
BOLTS
SURFACE PREP-SP
PAINT SEE SPECS
REF.DRAWING E7, E8

☒ CONFORMS TO DESIGN CONCEPT
☐ CONFORMS TO DESIGN CONCEPT WITH REVISIONS AS SHOWN
☐ NON-CONFORMING–REVISE & RESUBMIT
THIS SHOP DRAWING HAS BEEN REVIEWED FOR GENERAL CONFORMANCE WITH DESIGN CONCEPT ONLY AND DOES NOT RELIEVE THE FABRICATOR/VENDOR OF RESPONSIBLITY FOR CONFORMANCE WITH DESIGN DRAWINGS AND SPECIFICATIONS ALL OF WHICH HAVE PRIORITY OVER THIS SHOP DRAWING.
By A.F. Date 10-13-06
LIN & ASSOCIATES, INC.

WELD NOTE FOR ANY ASSEMBLY REQUIRING TACK WELDS:
- ALL TACK WELDS ARE TO BE MADE IN THE WELD JOINT ONLY

REV	DATE	DESCRIPTION	
0	SEP/10/06	FOR APPROVAL	VS

RAINIER WELDING

19020 NE 84TH STREET - REDMOND, WA 98053
(425) 868-1300 FAX (425) 868-8872
STEEL AND ALUMINUM FABRICATING

PROJECT TOLT BRIDGE No 1834A
THIS DRAWING INCLUDES
FOR SNOHOMISH COUNTY OFFICIAL
DRAWN DJ DATE 07/31/2006
CHK DSC DATE 09/10/2006
DWG NUMBER 2707 - 134A △0

PRO DRAFT INC. PD# 676 : PH:(604)589-6425
DRAWINGS PREPARED ON 3D-Xsteel File Name :- A [135.A]
Model Name: 725_102_TOLT_BRIDGE_541
Plot Date: 09/10/2006 12:19:42

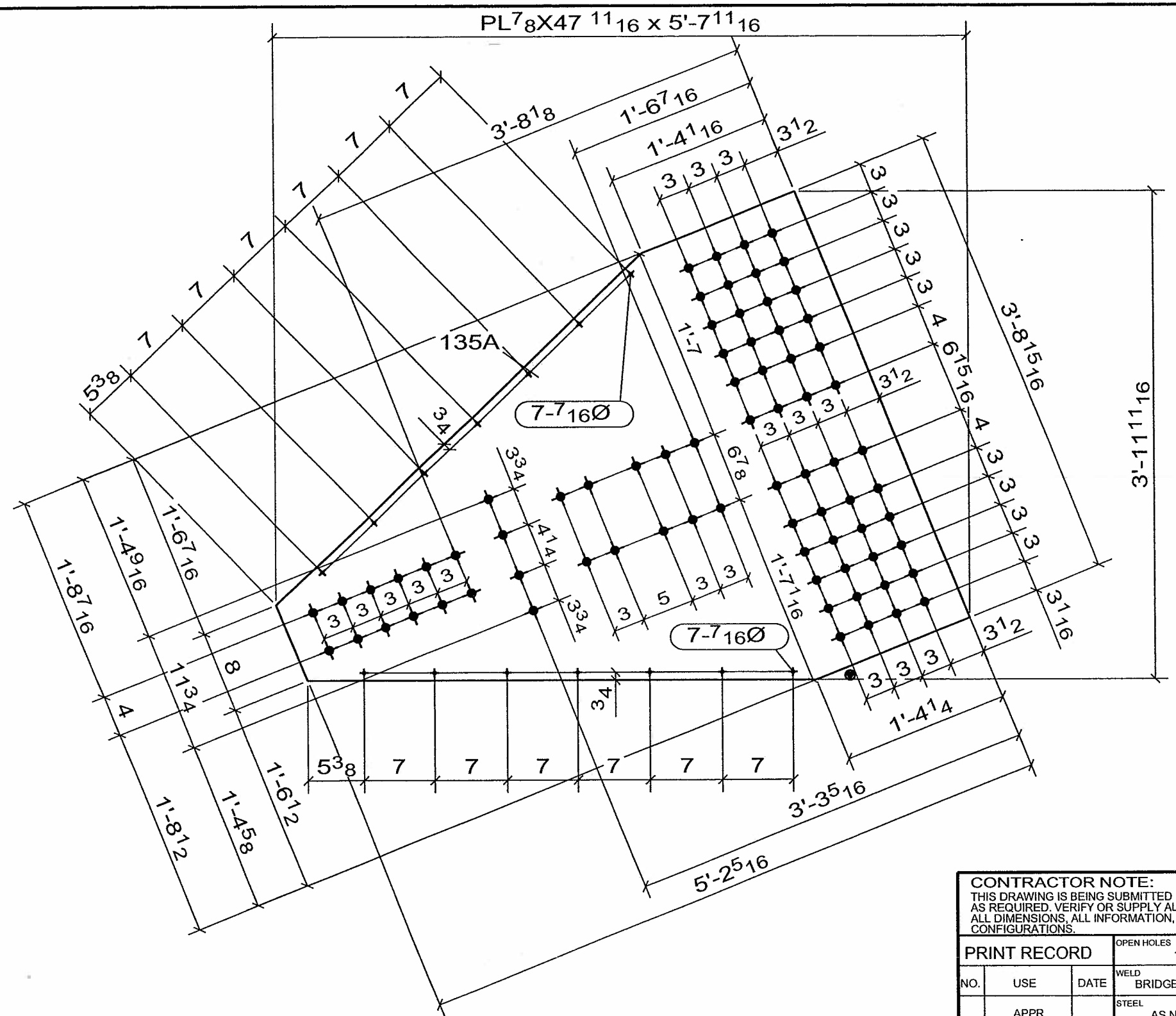

COORDINATE WITH SS COVER PL SHOP DWG'S

☐ CONFORMS TO DESIGN CONCEPT
☒ CONFORMS TO DESIGN CONCEPT WITH REVISIONS AS SHOWN
☐ NON-CONFORMING–REVISE & RESUBMIT

THIS SHOP DRAWING HAS BEEN REVIEWED FOR GENERAL CONFORMANCE WITH DESIGN CONCEPT ONLY AND DOES NOT RELIEVE THE FABRICATOR/VENDOR OF RESPONSIBLITY FOR CONFORMANCE WITH DESIGN DRAWINGS AND SPECIFICATIONS ALL OF WHICH HAVE PRIORITY OVER THIS SHOP DRAWING.

By A.F. Date 10-13-06

LIN & ASSOCIATES, INC.

WELD NOTE FOR ANY ASSEMBLY REQUIRING TACK WELDS:
- ALL TACK WELDS ARE TO BE MADE IN THE WELD JOINT ONLY

4 - GUSSET_PL - 135A

No to SHIP	SHIP MARK	No PIECES	PIECE MARKS	DESCRIPTION	LENGTH	GRADE	REMARKS	WEIGHT	ADVANCE BILL
4	135A			GUSSET_PL				800	
		4	135A	PL7/8X47 11/16	5'-7 11/16"	AASHTO M 270 GR. 50	FCM/V	800	

CONTRACTOR NOTE:
THIS DRAWING IS BEING SUBMITTED FOR APPROVAL AS REQUIRED. VERIFY OR SUPPLY ALL QUANTITIES, ALL DIMENSIONS, ALL INFORMATION, & ALL CONFIGURATIONS.

PRINT RECORD

NO.	USE	DATE
	APPR.	
	APPR.	
	PURCH	
	FAB	
	FAB. OFFICE	
	Q.A.	
	DIST	
	ERECT.	

OPEN HOLES: 15/16 Ø U/N
WELD: BRIDGE WELDING CODE: D1.5
STEEL: AS NOTED
BOLTS:
SURFACE PREP-SP:
PAINT: SEE SPECS
REF.DRAWING: E6, E7, E8, E9

REV	DATE	DESCRIPTION	
0	SEP/10/06	FOR APPROVAL	VS

RAINIER WELDING

19020 NE 84TH STREET - REDMOND, WA 98053
(425) 868-1300 FAX (425) 868-8872
STEEL AND ALUMINUM FABRICATING

PROJECT: TOLT BRIDGE No 1834A
THIS DRAWING INCLUDES:
FOR: SNOHOMISH COUNTY OFFICIAL

DRAWN DJ DATE 07/31/2006 | CHK DSC DATE 09/10/2006 | DWG NUMBER 2707 - 135A | 0

PRO DRAFT INC. PDI# 676 : PH:(604)589-6425
DRAWINGS PREPARED ON 3D-Xsteel File Name :- A [136.A]
Model Name: 725_102_TOLT_BRIDGE_541
Plot Date: 09/10/2006 12:19:43

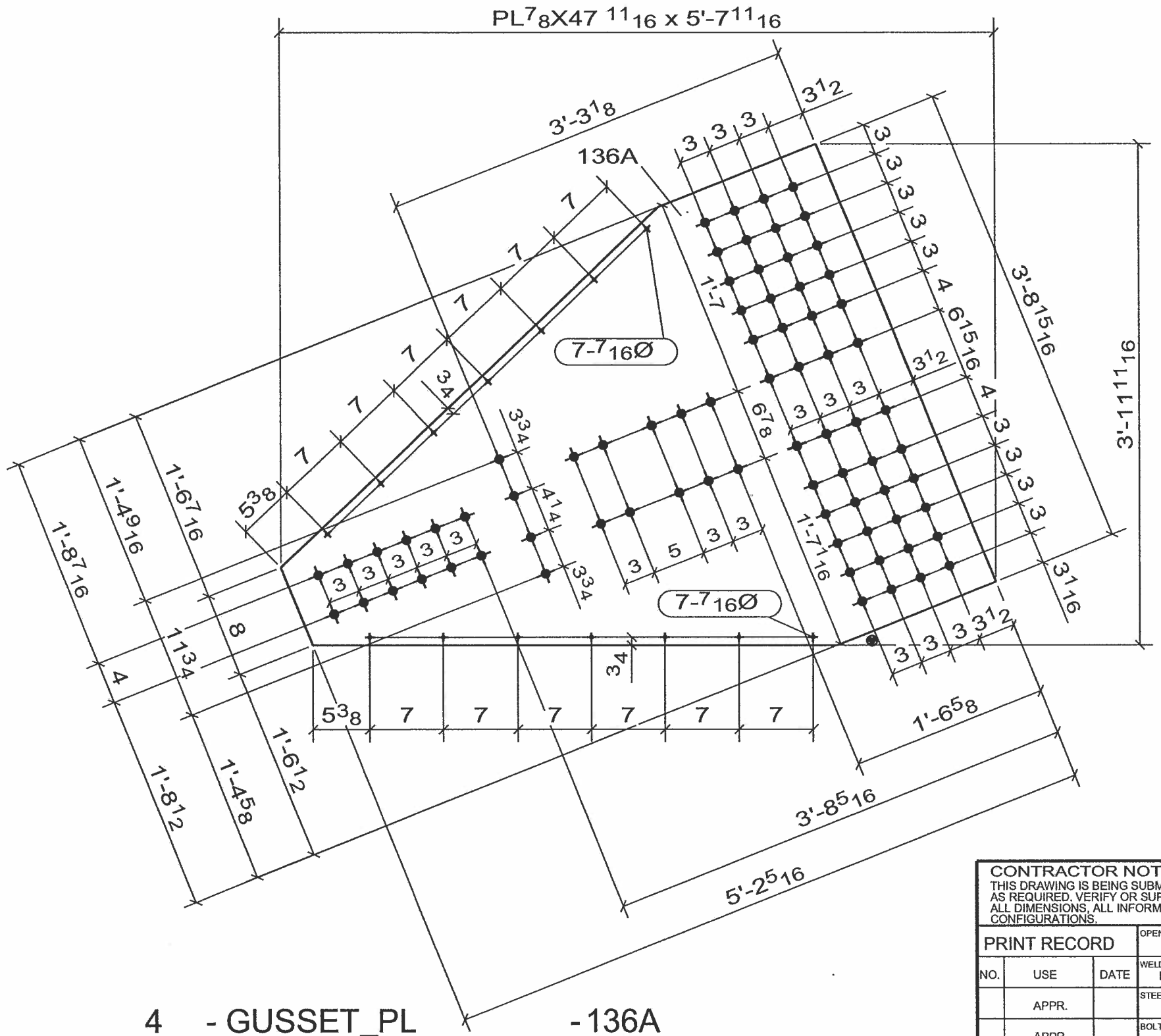

COORDINATE WITH SS COVER PL SHOP DWG'S

☐ CONFORMS TO DESIGN CONCEPT
☒ CONFORMS TO DESIGN CONCEPT WITH REVISIONS AS SHOWN
☐ NON-CONFORMING–REVISE & RESUBMIT

THIS SHOP DRAWING HAS BEEN REVIEWED FOR GENERAL CONFORMANCE WITH DESIGN CONCEPT ONLY AND DOES NOT RELIEVE THE FABRICATOR/VENDOR OF RESPONSIBLITY FOR CONFORMANCE WITH DESIGN DRAWINGS AND SPECIFICATIONS ALL OF WHICH HAVE PRIORITY OVER THIS SHOP DRAWING.

By A.F. Date 10-13-06

I.IN & ASSOCIATES, INC.

WELD NOTE FOR ANY ASSEMBLY REQUIRING TACK WELDS:
- ALL TACK WELDS ARE TO BE MADE IN THE WELD JOINT ONLY

4 - GUSSET_PL - 136A

No to SHIP	SHIP MARK	No PIECES	PIECE MARKS	DESCRIPTION	LENGTH	GRADE	REMARKS	WEIGHT	ADVANCE BILL
4	136A			GUSSET_PL				800	
		4	136A	PL7/8X47 11/16	5'-7 11/16"	AASHTO M 270 GR. 50	FCM/V	800	

CONTRACTOR NOTE:
THIS DRAWING IS BEING SUBMITTED FOR APPROVAL AS REQUIRED. VERIFY OR SUPPLY ALL QUANTITIES, ALL DIMENSIONS, ALL INFORMATION, & ALL CONFIGURATIONS.

PRINT RECORD

NO.	USE	DATE
	APPR.	
	APPR.	
	PURCH	
	FAB	
	FAB. OFFICE	
	Q.A.	
	DIST.	
	ERECT.	

OPEN HOLES: 15/16 Ø U/N
WELD: BRIDGE WELDING CODE: D1.5
STEEL: AS NOTED
BOLTS:
SURFACE PREP-SP:
PAINT: SEE SPECS
REF.DRAWING: E6, E7, E8, E9

REV	DATE	DESCRIPTION	
0	SEP/10/06	FOR APPROVAL	VS

RAINIER WELDING

19020 NE 84TH STREET - REDMOND, WA 98053
(425) 868-1300 FAX (425) 868-8872
STEEL AND ALUMINUM FABRICATING

PROJECT: TOLT BRIDGE No 1834A
THIS DRAWING INCLUDES:
FOR: SNOHOMISH COUNTY OFFICIAL

DRAWN DJ DATE 07/31/2006 | CHK DSC DATE 09/10/2006 | DWG NUMBER 2707 - 136A | 0

PRO DRAFT INC. PDI# 676 : PH:(604)589-6425
DRAWINGS PREPARED ON 3D-Xsteel File Name :- A [137.A]
Model Name: 725_102_TOLT_BRIDGE_541
Plot Date: 09/10/2006 12:19:44

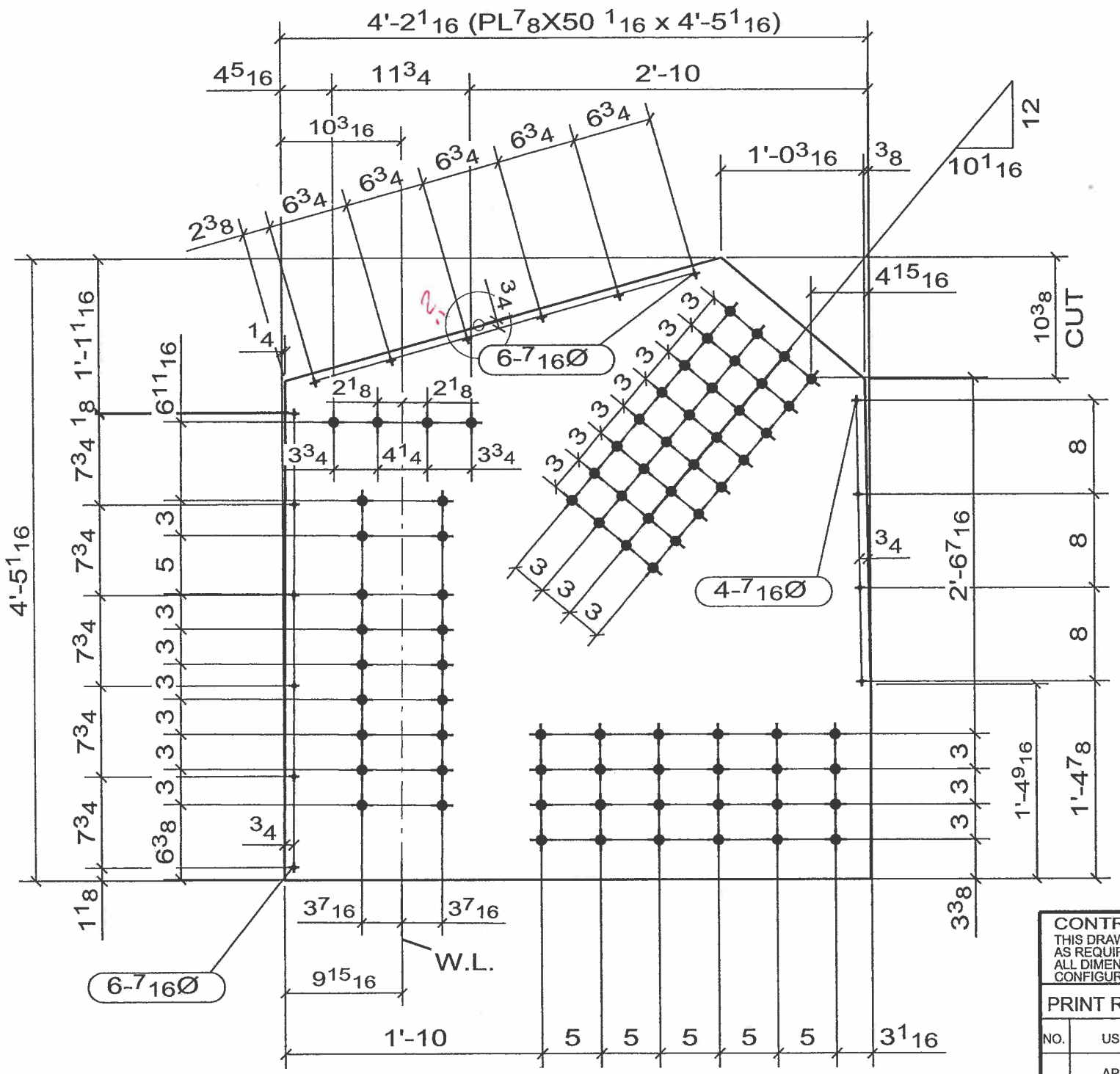

8 - GUSSET_PL -137A

No to SHIP	SHIP MARK	No PIECES	PIECE MARKS	DESCRIPTION	LENGTH	GRADE	REMARKS	WEIGHT	ADVANCE BILL
8	137A			GUSSET_PL				697	
		8	137A	PL7/8X50 1/16	4'-5 1/16"	AASHTO M 270 GR. 50	FCM/V	697	

CONTRACTOR NOTE:
THIS DRAWING IS BEING SUBMITTED FOR APPROVAL AS REQUIRED. VERIFY OR SUPPLY ALL QUANTITIES, ALL DIMENSIONS, ALL INFORMATION, & ALL CONFIGURATIONS.

PRINT RECORD

NO.	USE	DATE
	APPR.	
	APPR.	
	PURCH	
	FAB	
	FAB. OFFICE	
	Q.A.	
	DIST.	
	ERECT.	

OPEN HOLES 15/16 Ø U/N
WELD BRIDGE WELDING CODE: D1.5
STEEL AS NOTED
BOLTS
SURFACE PREP-SP
PAINT SEE SPECS
REF.DRAWING E6, E7, E8, E9

☒ CONFORMS TO DESIGN CONCEPT
☐ CONFORMS TO DESIGN CONCEPT WITH REVISIONS AS SHOWN
☐ NON-CONFORMING–REVISE & RESUBMIT
THIS SHOP DRAWING HAS BEEN REVIEWED FOR GENERAL CONFORMANCE WITH DESIGN CONCEPT ONLY AND DOES NOT RELIEVE THE FABRICATOR/VENDOR OF RESPONSIBLITY FOR CONFORMANCE WITH DESIGN DRAWINGS AND SPECIFICATIONS ALL OF WHICH HAVE PRIORITY OVER THIS SHOP DRAWING.
By A. F. Date 10-13-06
LIN & ASSOCIATES, INC.

WELD NOTE FOR ANY ASSEMBLY REQUIRING TACK WELDS:
- ALL TACK WELDS ARE TO BE MADE IN THE WELD JOINT ONLY

REV	DATE	DESCRIPTION	
0	SEP/10/06	FOR APPROVAL	VS

RAINIER WELDING
19020 NE 84TH STREET - REDMOND, WA 98053
(425) 868-1300 FAX (425) 868-8872
STEEL AND ALUMINUM FABRICATING

PROJECT TOLT BRIDGE No 1834A
THIS DRAWING INCLUDES
FOR SNOHOMISH COUNTY OFFICIAL
DRAWN DJ DATE 07/31/2006 CHK DSC DATE 09/10/2006 DWG NUMBER 2707 - 137A 0

PRO DRAFT INC. PDI# 676 : PH:(604)589-6425
DRAWINGS PREPARED ON 3D-Xsteel File Name :- A [138.A]
Model Name: 725_102_TOLT_BRIDGE_541
Plot Date: 09/10/2006 12:19:46

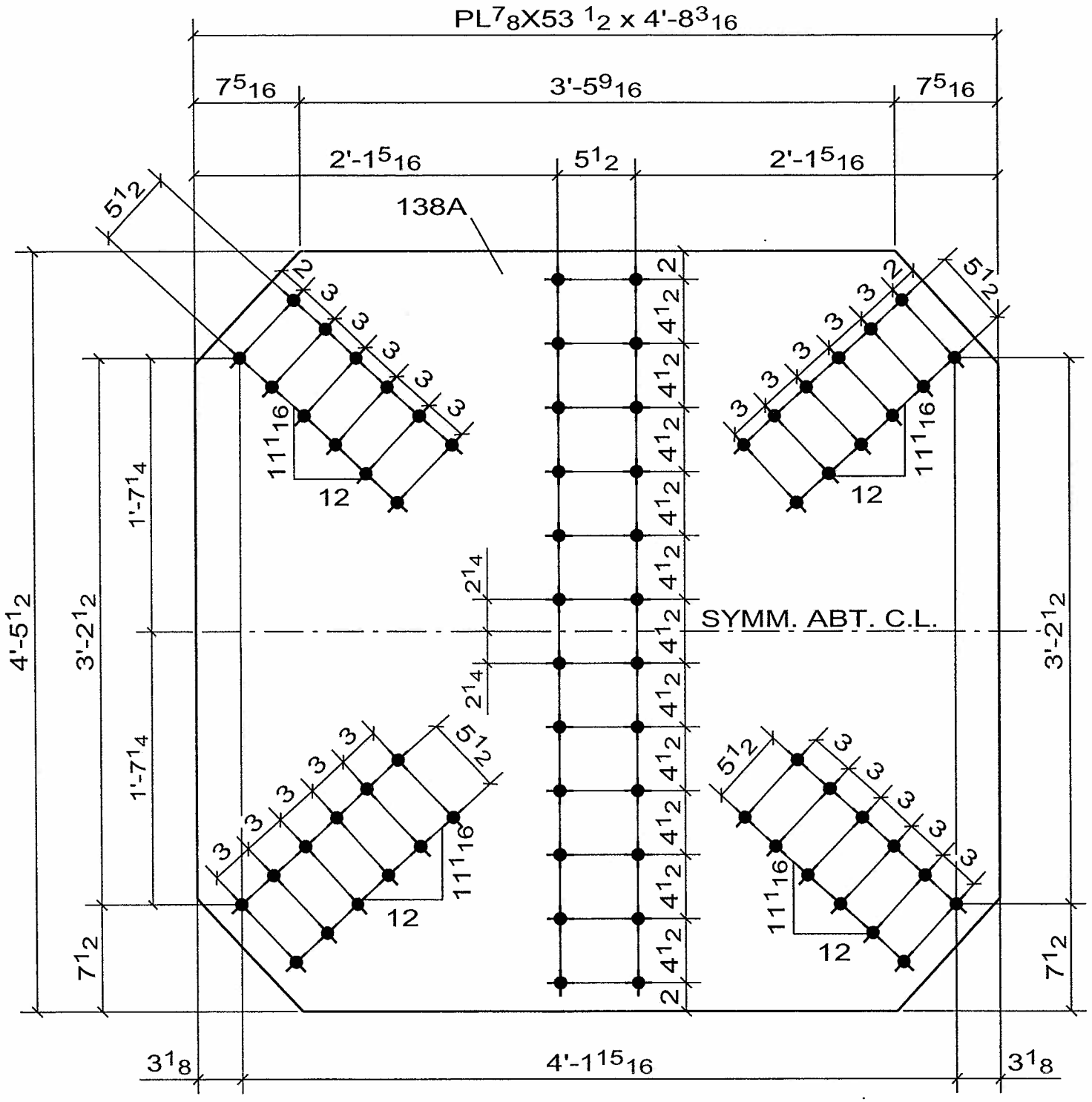

1 - GUSSET_PL - 138A

No to SHIP	SHIP MARK	No PIECES	PIECE MARKS	DESCRIPTION	LENGTH	GRADE	REMARKS	WEIGHT	ADVANCE BILL
1	138A			GUSSET_PL				745	
		1	138A	PL7/8X53 1/2	4'-8 3/16"	AASHTO M 270 GR. 50		745	

☒ CONFORMS TO DESIGN CONCEPT
☐ CONFORMS TO DESIGN CONCEPT WITH REVISIONS AS SHOWN
☐ NON-CONFORMING-REVISE & RESUBMIT

THIS SHOP DRAWING HAS BEEN REVIEWED FOR GENERAL CONFORMANCE WITH DESIGN CONCEPT ONLY AND DOES NOT RELIEVE THE FABRICATOR/VENDOR OF RESPONSIBILITY FOR CONFORMANCE WITH DESIGN DRAWINGS AND SPECIFICATIONS ALL OF WHICH HAVE PRIORITY OVER THIS SHOP DRAWING.

By A. F. Date 10-13-06

LIN & ASSOCIATES, INC.

WELD NOTE FOR ANY ASSEMBLY REQUIRING TACK WELDS:
- ALL TACK WELDS ARE TO BE MADE IN THE WELD JOINT ONLY

CONTRACTOR NOTE:
THIS DRAWING IS BEING SUBMITTED FOR APPROVAL AS REQUIRED. VERIFY OR SUPPLY ALL QUANTITIES, ALL DIMENSIONS, ALL INFORMATION, & ALL CONFIGURATIONS.

PRINT RECORD

NO.	USE	DATE
	APPR.	
	APPR.	
	PURCH	
	FAB	
	FAB. OFFICE	
	Q.A.	
	DIST.	
	ERECT.	

OPEN HOLES 15/16 Ø U/N
WELD BRIDGE WELDING CODE: D1.5
STEEL AS NOTED
BOLTS
SURFACE PREP-SP
PAINT SEE SPECS
REF.DRAWING E2

REV	DATE	DESCRIPTION	
0	SEP/10/06	FOR APPROVAL	VS

RAINIER WELDING

19020 NE 84TH STREET - REDMOND, WA 98053
(425) 868-1300 FAX (425) 868-8872
STEEL AND ALUMINUM FABRICATING

PROJECT TOLT BRIDGE No 1834A
THIS DRAWING INCLUDES
FOR SNOHOMISH COUNTY OFFICIAL

DRAWN DJ DATE 07/31/2006 | CHK DSC DATE 09/10/2006 | DWG NUMBER 2707 - 138A | 0

PRO DRAFT INC. PDI# 676 : PH:(604)589-6425
DRAWINGS PREPARED ON 3D-Xsteel File Name :- A [139.A]
Model Name: 725_102_TOLT_BRIDGE_541
Plot Date: 09/10/2006 12:19:48

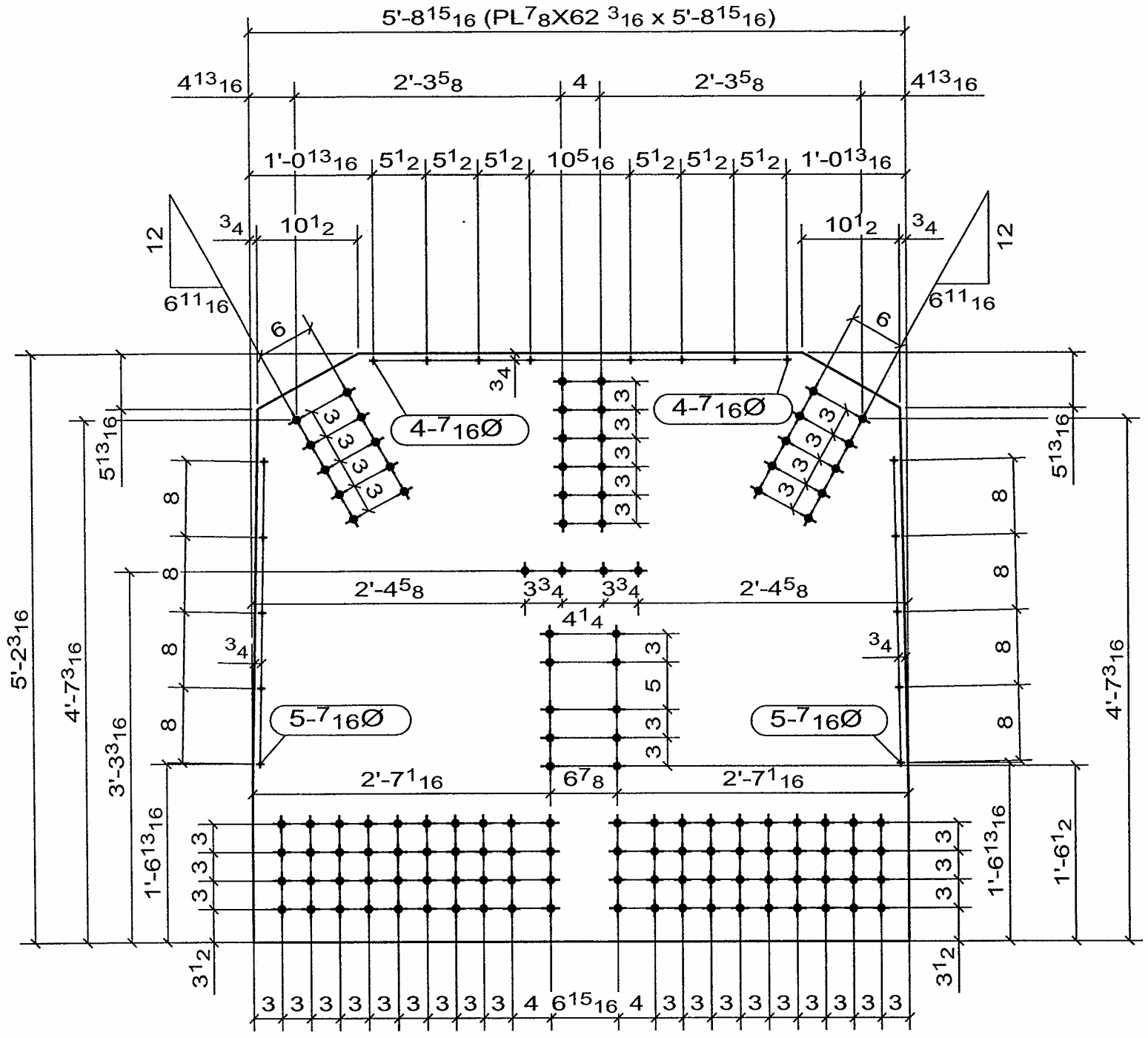

COORDINATE WITH SS COVER PL
SHOP DWG'S

☐ CONFORMS TO DESIGN CONCEPT
☒ CONFORMS TO DESIGN CONCEPT WITH REVISIONS AS SHOWN
☐ NON-CONFORMING–REVISE & RESUBMIT

THIS SHOP DRAWING HAS BEEN REVIEWED FOR GENERAL CONFORMANCE WITH DESIGN CONCEPT ONLY AND DOES NOT RELIEVE THE FABRICATOR/VENDOR OF RESPONSIBLITY FOR CONFORMANCE WITH DESIGN DRAWINGS AND SPECIFICATIONS ALL OF WHICH HAVE PRIORITY OVER THIS SHOP DRAWING.

By A. F. Date 10-13-06

LIN & ASSOCIATES, INC.

WELD NOTE FOR ANY ASSEMBLY REQUIRING TACK WELDS:
- ALL TACK WELDS ARE TO BE MADE IN THE WELD JOINT ONLY

REV	DATE	DESCRIPTION	
0	SEP/10/06	FOR APPROVAL	VS

2 - GUSSET_PL - 139A

No to SHIP	SHIP MARK	No PIECES	PIECE MARKS	DESCRIPTION	LENGTH	GRADE	REMARKS	WEIGHT	ADVANCE BILL
2	139A			GUSSET_PL				1063	
		2	139A	PL7/8X62 3/16	5'-8 15/16"	AASHTO M 270 GR. 50	FCM/V	1063	

CONTRACTOR NOTE:
THIS DRAWING IS BEING SUBMITTED FOR APPROVAL AS REQUIRED. VERIFY OR SUPPLY ALL QUANTITIES, ALL DIMENSIONS, ALL INFORMATION, & ALL CONFIGURATIONS.

PRINT RECORD

NO.	USE	DATE
	APPR.	
	APPR.	
	PURCH	
	FAB	
	FAB. OFFICE	
	Q.A.	
	DIST.	
	ERECT.	

OPEN HOLES: 15/16 Ø U/N
WELD: BRIDGE WELDING CODE: D1.5
STEEL: AS NOTED
BOLTS:
SURFACE PREP-SP:
PAINT: SEE SPECS
REF.DRAWING: E6, E8

RAINIER WELDING

19020 NE 84TH STREET - REDMOND, WA 98053
(425) 868-1300 FAX (425) 868-8872
STEEL AND ALUMINUM FABRICATING

PROJECT: TOLT BRIDGE No 1834A
THIS DRAWING INCLUDES:
FOR: SNOHOMISH COUNTY OFFICIAL

DRAWN	CHK	DWG NUMBER
DJ	DSC	2707 - 139A
DATE 07/31/2006	DATE 09/10/2006	0

PRO DRAFT INC PDI# 676 : PH:(604)589-6425
DRAWINGS PREPARED ON 3D-Xsteel File Name :- A [149.A]
Model Name: 725_102_TOLT_BRIDGE_541
Plot Date: 09/10/2006 12:19:49

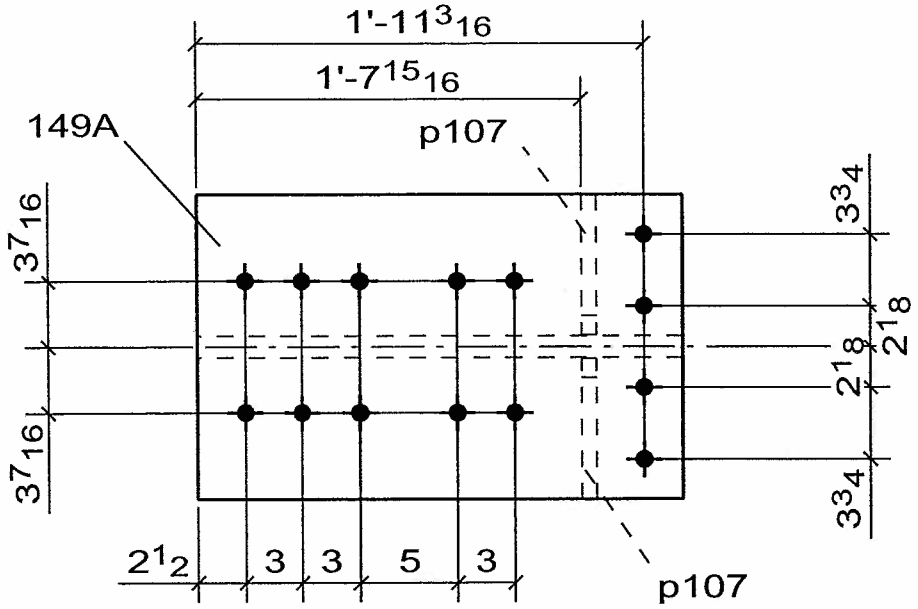

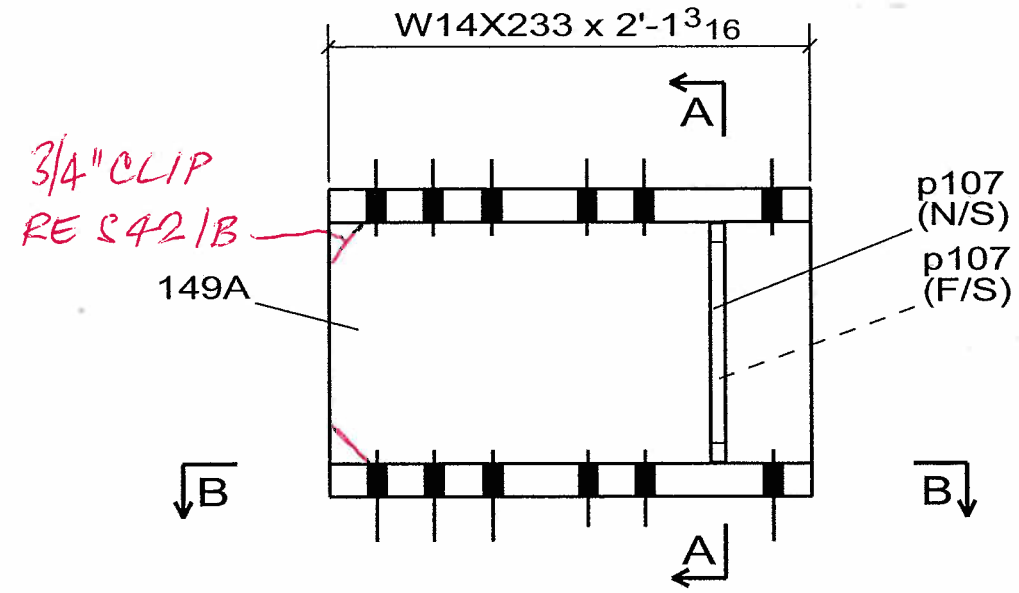

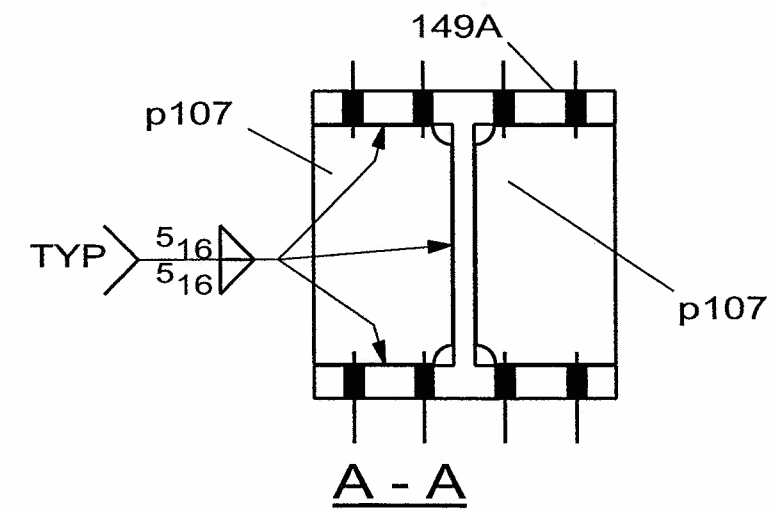

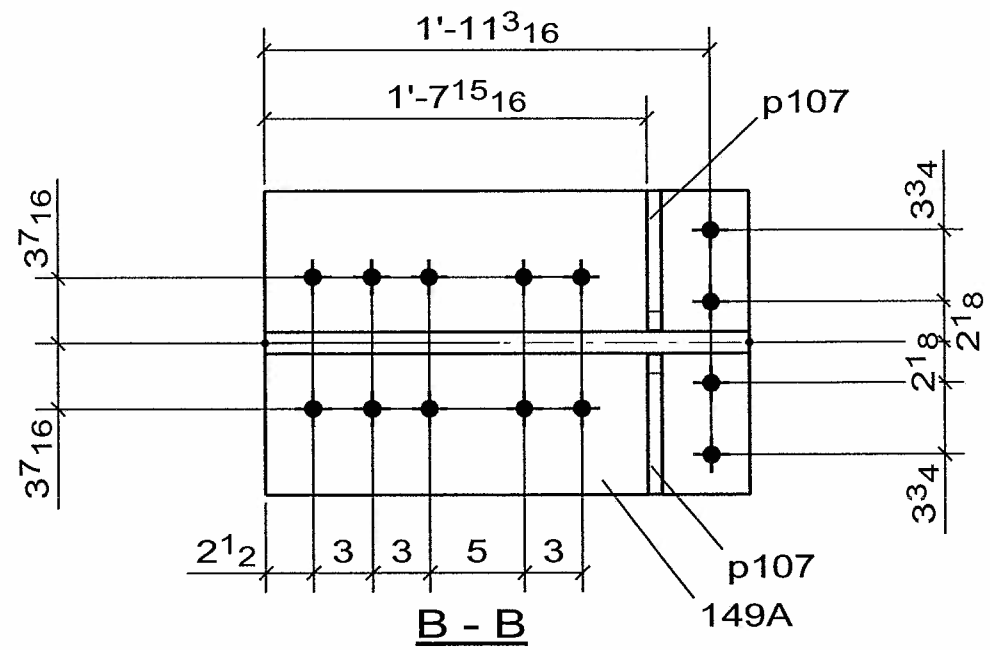

CONFORMS TO DESIGN CONCEPT
☒ CONFORMS TO DESIGN CONCEPT WITH REVISIONS AS SHOWN
☐ NON-CONFORMING–REVISE & RESUBMIT
THIS SHOP DRAWING HAS BEEN REVIEWED FOR GENERAL CONFORMANCE WITH DESIGN CONCEPT ONLY AND DOES NOT RELIEVE THE FABRICATOR/VENDOR OF RESPONSIBLITY FOR CONFORMANCE WITH DESIGN DRAWINGS AND SPECIFICATIONS ALL OF WHICH HAVE PRIORITY OVER THIS SHOP DRAWING.
By A.F. Date 10/13/06
LIN & ASSOCIATES, INC.

WELD NOTE FOR ANY ASSEMBLY REQUIRING TACK WELDS:
- ALL TACK WELDS ARE TO BE MADE IN THE WELD JOINT ONLY

15 - POST - 149A

No to SHIP	SHIP MARK	No PIECES	PIECE MARKS	DESCRIPTION	LENGTH	GRADE	REMARKS	WEIGHT	ADVANCE BILL
15	149A			POST				528	
		15	149A	W14X233	2'-1 3/16"	AASHTO M 270 GR. 50		489	
		30	p107	PL3/4X7 5/16	1'-0 7/16"	AASHTO M 270 GR. 50		19	

CONTRACTOR NOTE:
THIS DRAWING IS BEING SUBMITTED FOR APPROVAL AS REQUIRED. VERIFY OR SUPPLY ALL QUANTITIES, ALL DIMENSIONS, ALL INFORMATION, & ALL CONFIGURATIONS.

PRINT RECORD

NO.	USE	DATE
	APPR.	
	APPR.	
	PURCH	
	FAB	
	FAB. OFFICE	
	Q.A.	
	DIST.	
	ERECT.	

OPEN HOLES: 15/16 Ø U/N
WELD: BRIDGE WELDING CODE: D1.5
STEEL: AS NOTED
BOLTS:
SURFACE PREP-SP:
PAINT: SEE SPECS
REF.DRAWING: E6, E7, E8, E9

REV	DATE	DESCRIPTION	
0	SEP/10/06	FOR APPROVAL	VS

RAINIER WELDING

19020 NE 84TH STREET - REDMOND, WA 98053
(425) 868-1300 FAX (425) 868-8872
STEEL AND ALUMINUM FABRICATING

PROJECT: TOLT BRIDGE No 1834A
THIS DRAWING INCLUDES:
FOR: SNOHOMISH COUNTY OFFICIAL

DRAWN DJ	CHK DSC	DWG NUMBER
DATE 07/31/2006	DATE 09/10/2006	2707 - 149A

0

PRO DRAFT INC. PDI# 676 : PH:(604)589-6425
DRAWINGS PREPARED ON 3D-Xsteel File Name :- A [151.A]
Model Name: 725_102_TOLT_BRIDGE_541
Plot Date: 09/10/2006 12:19:50

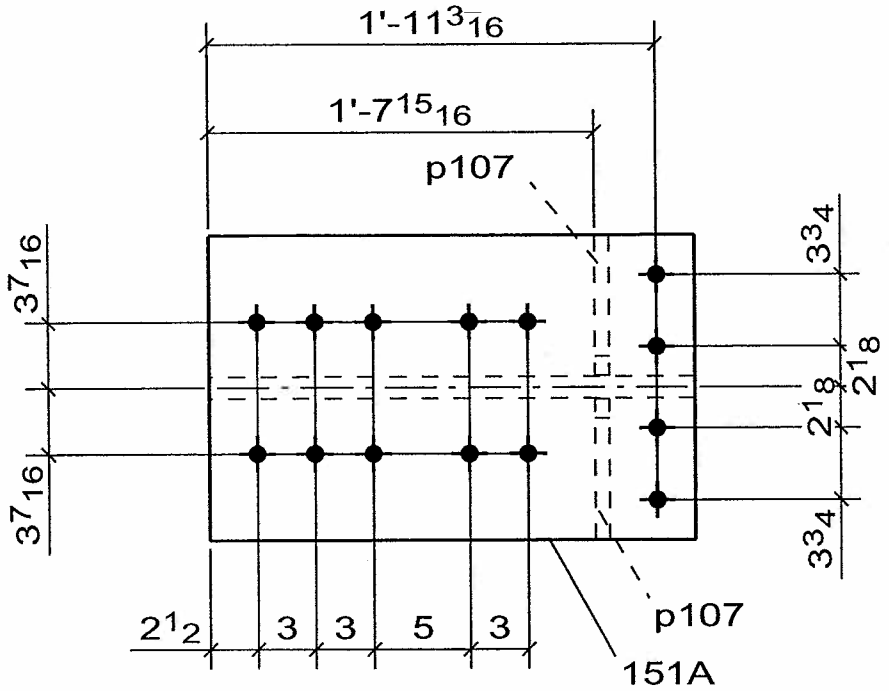

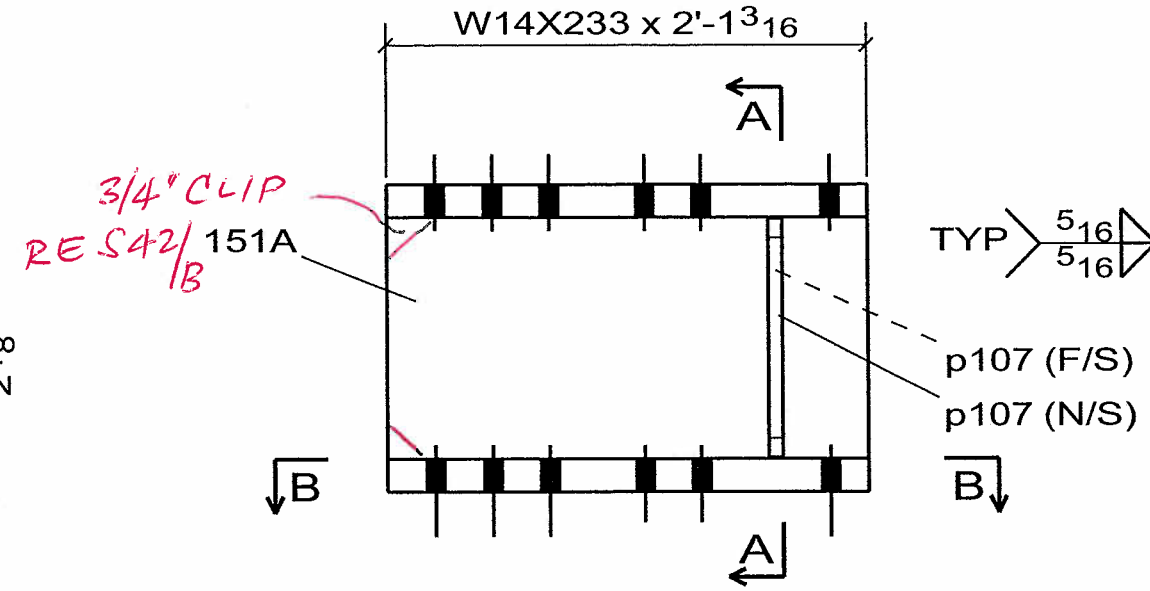

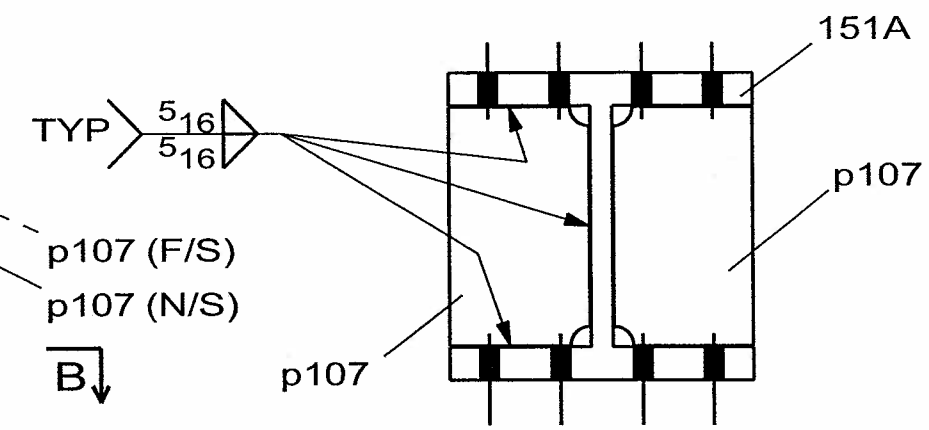

A - A

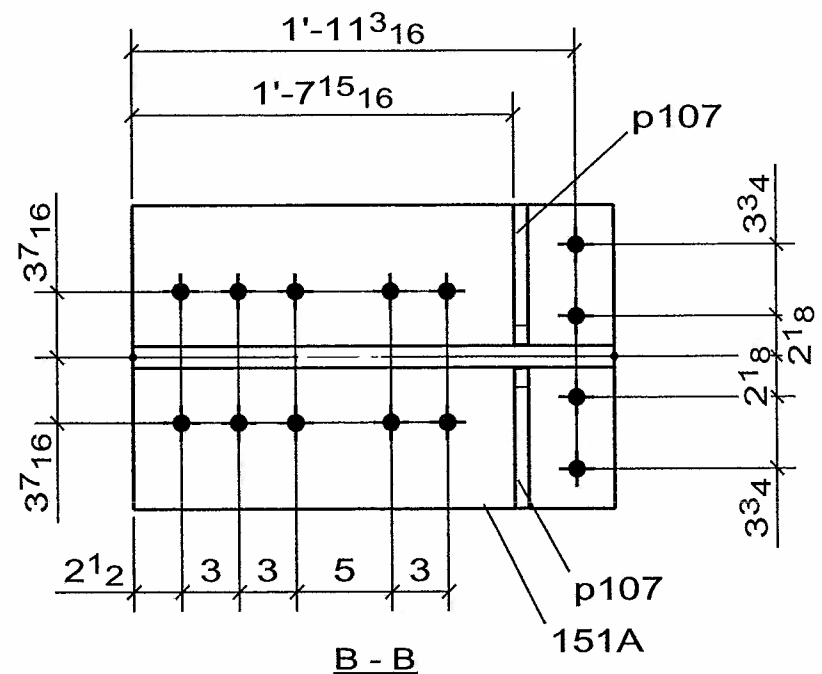

B - B

CONFORMS TO DESIGN CONCEPT
☒ CONFORMS TO DESIGN CONCEPT WITH REVISIONS AS SHOWN
☐ NON-CONFORMING–REVISE & RESUBMIT

THIS SHOP DRAWING HAS BEEN REVIEWED FOR GENERAL CONFORMANCE WITH DESIGN CONCEPT ONLY AND DOES NOT RELIEVE THE FABRICATOR/VENDOR OF RESPONSIBLITY FOR CONFORMANCE WITH DESIGN DRAWINGS AND SPECIFICATIONS ALL OF WHICH HAVE PRIORITY OVER THIS SHOP DRAWING.

By A.F. Date 10/13/06

LIN & ASSOCIATES, INC.

WELD NOTE FOR ANY ASSEMBLY REQUIRING TACK WELDS:
- ALL TACK WELDS ARE TO BE MADE IN THE WELD JOINT ONLY

2 - POST -151A

No to SHIP	SHIP MARK	No PIECES	PIECE MARKS	DESCRIPTION	LENGTH	GRADE	REMARKS	WEIGHT	ADVANCE BILL
2	151A			POST				528	
		2	151A	W14X233	2'-1 3/16"	AASHTO M 270 GR. 50		489	
		4	p107	PL3/4X7 5/16	1'-0 7/16"	AASHTO M 270 GR. 50		19	

CONTRACTOR NOTE:
THIS DRAWING IS BEING SUBMITTED FOR APPROVAL AS REQUIRED. VERIFY OR SUPPLY ALL QUANTITIES, ALL DIMENSIONS, ALL INFORMATION, & ALL CONFIGURATIONS.

PRINT RECORD

NO.	USE	DATE
	APPR.	
	APPR.	
	PURCH	
	FAB	
	FAB. OFFICE	
	Q.A.	
	DIST.	
	ERECT.	

OPEN HOLES: 15/16 Ø U/N
WELD: BRIDGE WELDING CODE: D1.5
STEEL: AS NOTED
BOLTS:
SURFACE PREP-SP:
PAINT: SEE SPECS
REF.DRAWING: E7, E8

REV	DATE	DESCRIPTION	
0	SEP/10/06	FOR APPROVAL	VS

RAINIER WELDING

19020 NE 84TH STREET - REDMOND, WA 98053
(425) 868-1300 FAX (425) 868-8872
STEEL AND ALUMINUM FABRICATING

PROJECT: TOLT BRIDGE No 1834A
THIS DRAWING INCLUDES:
FOR: SNOHOMISH COUNTY OFFICIAL

DRAWN DJ DATE 07/31/2006 | CHK DSC DATE 09/10/2006 | DWG NUMBER 2707 - 151A △0

PRO DRAFT INC. PDI# 676 : PH:(604)589-6425
DRAWINGS PREPARED ON 3D-Xsteel File Name :- A [152.A]
Model Name: 725_102_TOLT_BRIDGE_541
Plot Date: 09/10/2006 12:19:51

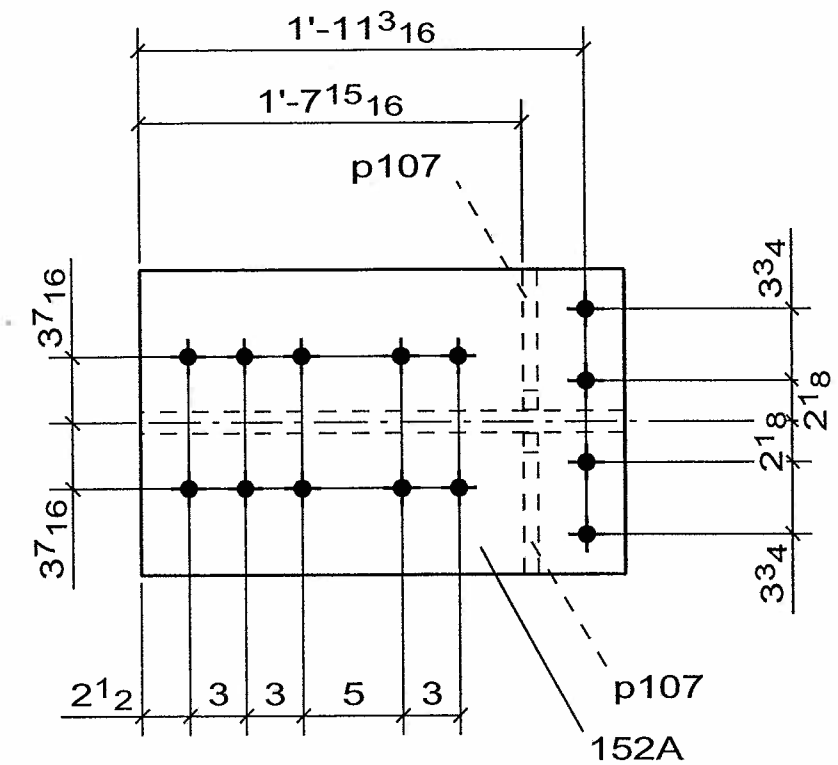

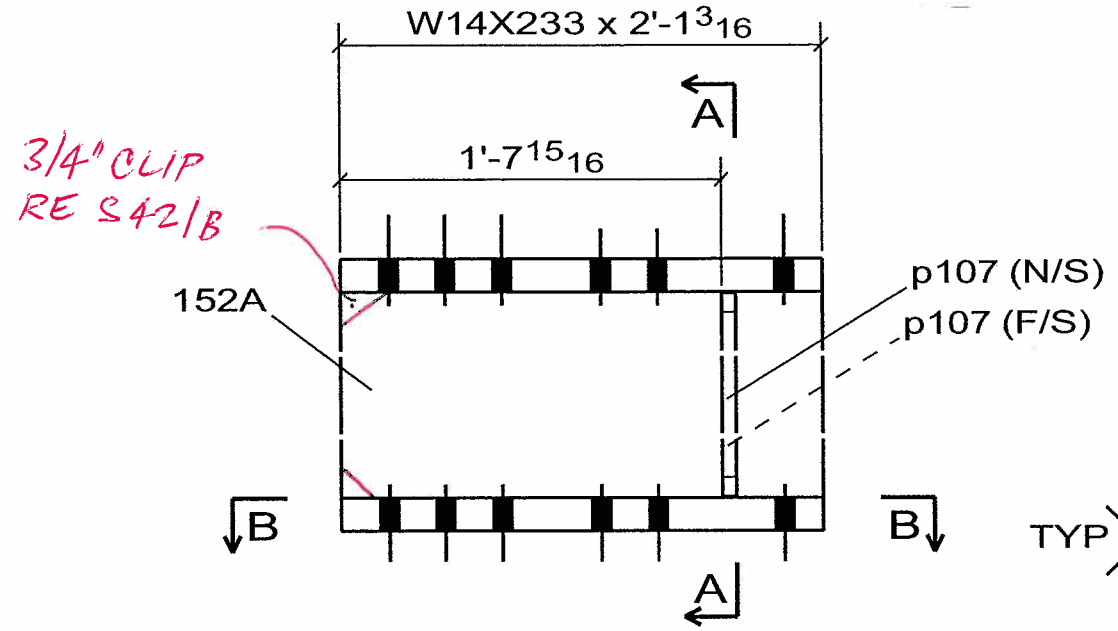

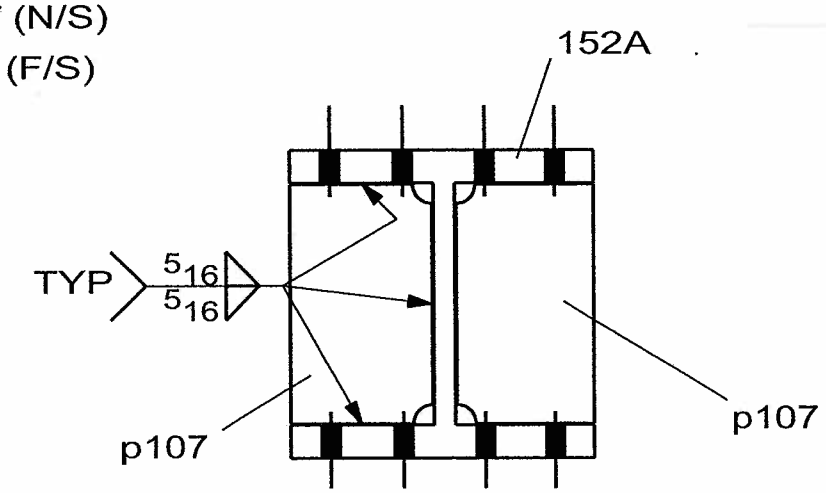

A - A

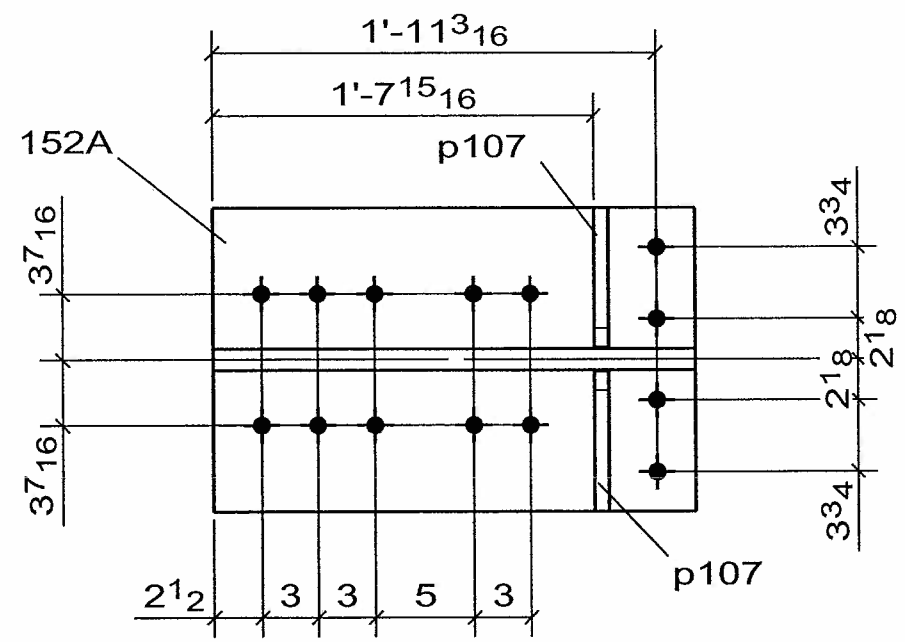

B - B

☐ CONFORMS TO DESIGN CONCEPT
☒ CONFORMS TO DESIGN CONCEPT WITH REVISIONS AS SHOWN
☐ NON-CONFORMING–REVISE & RESUBMIT

THIS SHOP DRAWING HAS BEEN REVIEWED FOR GENERAL CONFORMANCE WITH DESIGN CONCEPT ONLY AND DOES NOT RELIEVE THE FABRICATOR/VENDOR OF RESPONSIBLITY FOR CONFORMANCE WITH DESIGN DRAWINGS AND SPECIFICATIONS ALL OF WHICH HAVE PRIORITY OVER THIS SHOP DRAWING.

By A.F. Date 10/13/06

LIN & ASSOCIATES, INC.

WELD NOTE FOR ANY ASSEMBLY REQUIRING TACK WELDS:
- ALL TACK WELDS ARE TO BE MADE IN THE WELD JOINT ONLY

CONTRACTOR NOTE:
THIS DRAWING IS BEING SUBMITTED FOR APPROVAL AS REQUIRED. VERIFY OR SUPPLY ALL QUANTITIES, ALL DIMENSIONS, ALL INFORMATION, & ALL CONFIGURATIONS.

PRINT RECORD

NO.	USE	DATE
	APPR.	
	APPR.	
	PURCH	
	FAB	
	FAB. OFFICE	
	Q.A.	
	DIST.	
	ERECT.	

OPEN HOLES: 15/16 Ø U/N
WELD: BRIDGE WELDING CODE: D1.5
STEEL: AS NOTED
BOLTS:
SURFACE PREP-SP:
PAINT: SEE SPECS
REF.DRAWING: E6, E9

REV	DATE	DESCRIPTION	
0	SEP/10/06	FOR APPROVAL	VS

RAINIER WELDING

19020 NE 84TH STREET - REDMOND, WA 98053
(425) 868-1300 FAX (425) 868-8872
STEEL AND ALUMINUM FABRICATING

PROJECT: TOLT BRIDGE No 1834A
THIS DRAWING INCLUDES:
FOR: SNOHOMISH COUNTY OFFICIAL

DRAWN DJ DATE 07/31/2006 | CHK DSC DATE 09/10/2006 | DWG NUMBER 2707 - 152A | 0

2 - POST - 152A

No to SHIP	SHIP MARK	No PIECES	PIECE MARKS	DESCRIPTION	LENGTH	GRADE	REMARKS	WEIGHT	ADVANCE BILL
2	152A			POST				528	
		2	152A	W14X233	2'-1 3/16"	AASHTO M 270 GR. 50		489	
		4	p107	PL3/4X7 5/16	1'-0 7/16"	AASHTO M 270 GR. 50		19	

PRO DRAFT INC. PDI# 676 : PH:(604)589-6425
DRAWINGS PREPARED ON 3D-Xsteel File Name :- A [153.A]
Model Name: 725_102_TOLT_BRIDGE_541
Plot Date: 09/10/2006 12:19:53

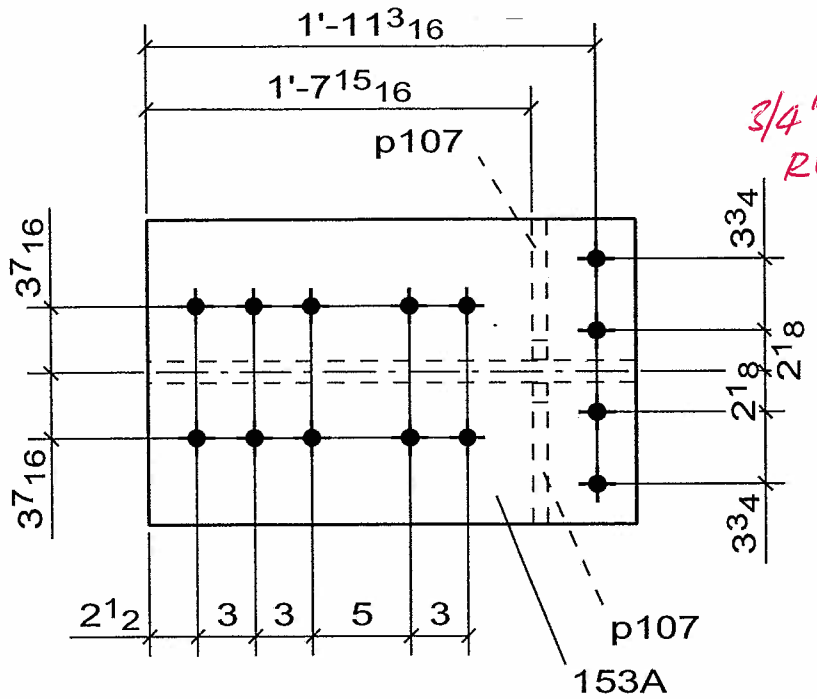

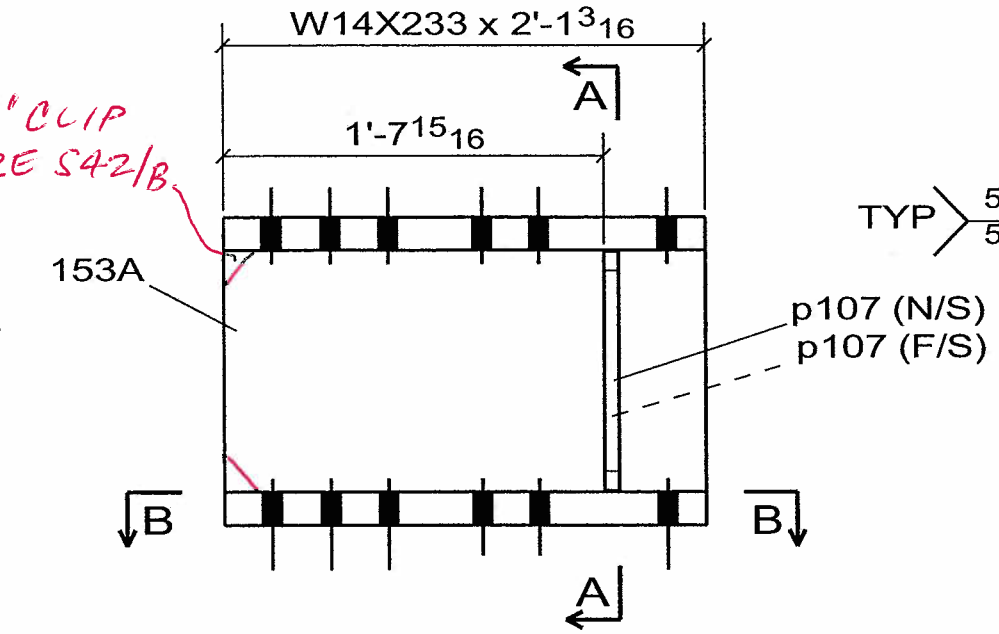

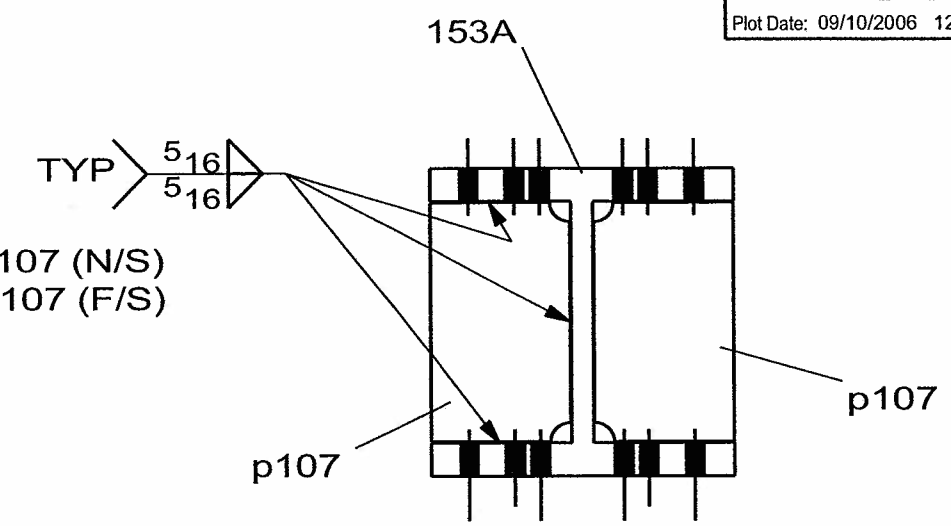

A - A

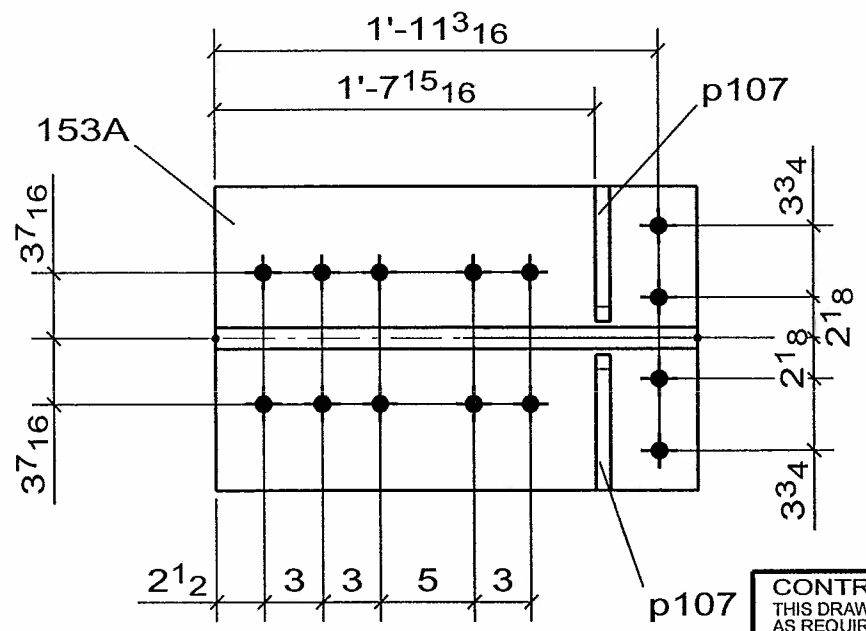

B - B

CONFORMS TO DESIGN CONCEPT
☒ CONFORMS TO DESIGN CONCEPT WITH REVISIONS AS SHOWN
☐ NON-CONFORMING-REVISE & RESUBMIT
THIS SHOP DRAWING HAS BEEN REVIEWED FOR GENERAL CONFORMANCE WITH DESIGN CONCEPT ONLY AND DOES NOT RELIEVE THE FABRICATOR/VENDOR OF RESPONSIBILITY FOR CONFORMANCE WITH DESIGN DRAWINGS AND SPECIFICATIONS ALL OF WHICH HAVE PRIORITY OVER THIS SHOP DRAWING.
By A. F. Date 10/13/06
LIN & ASSOCIATES, INC.

WELD NOTE FOR ANY ASSEMBLY REQUIRING TACK WELDS:
- ALL TACK WELDS ARE TO BE MADE IN THE WELD JOINT ONLY

3 - POST - 153A

No to SHIP	SHIP MARK	No PIECES	PIECE MARKS	DESCRIPTION	LENGTH	GRADE	REMARKS	WEIGHT	ADVANCE BILL
3	153A			POST				528	
		3	153A	W14X233	2'-1 3/16"	AASHTO M 270 GR. 50		489	
		6	p107	PL3/4X7 5/16	1'-0 7/16"	AASHTO M 270 GR. 50		19	

CONTRACTOR NOTE:
THIS DRAWING IS BEING SUBMITTED FOR APPROVAL AS REQUIRED. VERIFY OR SUPPLY ALL QUANTITIES, ALL DIMENSIONS, ALL INFORMATION, & ALL CONFIGURATIONS.

PRINT RECORD

NO.	USE	DATE
	APPR.	
	APPR.	
	PURCH	
	FAB	
	FAB. OFFICE	
	Q.A.	
	DIST.	
	ERECT.	

OPEN HOLES: 15/16 Ø U/N
WELD: BRIDGE WELDING CODE: D1.5
STEEL: AS NOTED
BOLTS:
SURFACE PREP-SP:
PAINT: SEE SPECS
REF.DRAWING: E6, E7, E8

REV	DATE	DESCRIPTION	
0	SEP/10/06	FOR APPROVAL	VS

RAINIER WELDING

19020 NE 84TH STREET - REDMOND, WA 98053
(425) 868-1300 FAX (425) 868-8872
STEEL AND ALUMINUM FABRICATING

PROJECT: TOLT BRIDGE No 1834A
THIS DRAWING INCLUDES:
FOR: SNOHOMISH COUNTY OFFICIAL

DRAWN DJ DATE 07/31/2006 | CHK DSC DATE 09/10/2006 | DWG NUMBER 2707 - 153A | 0

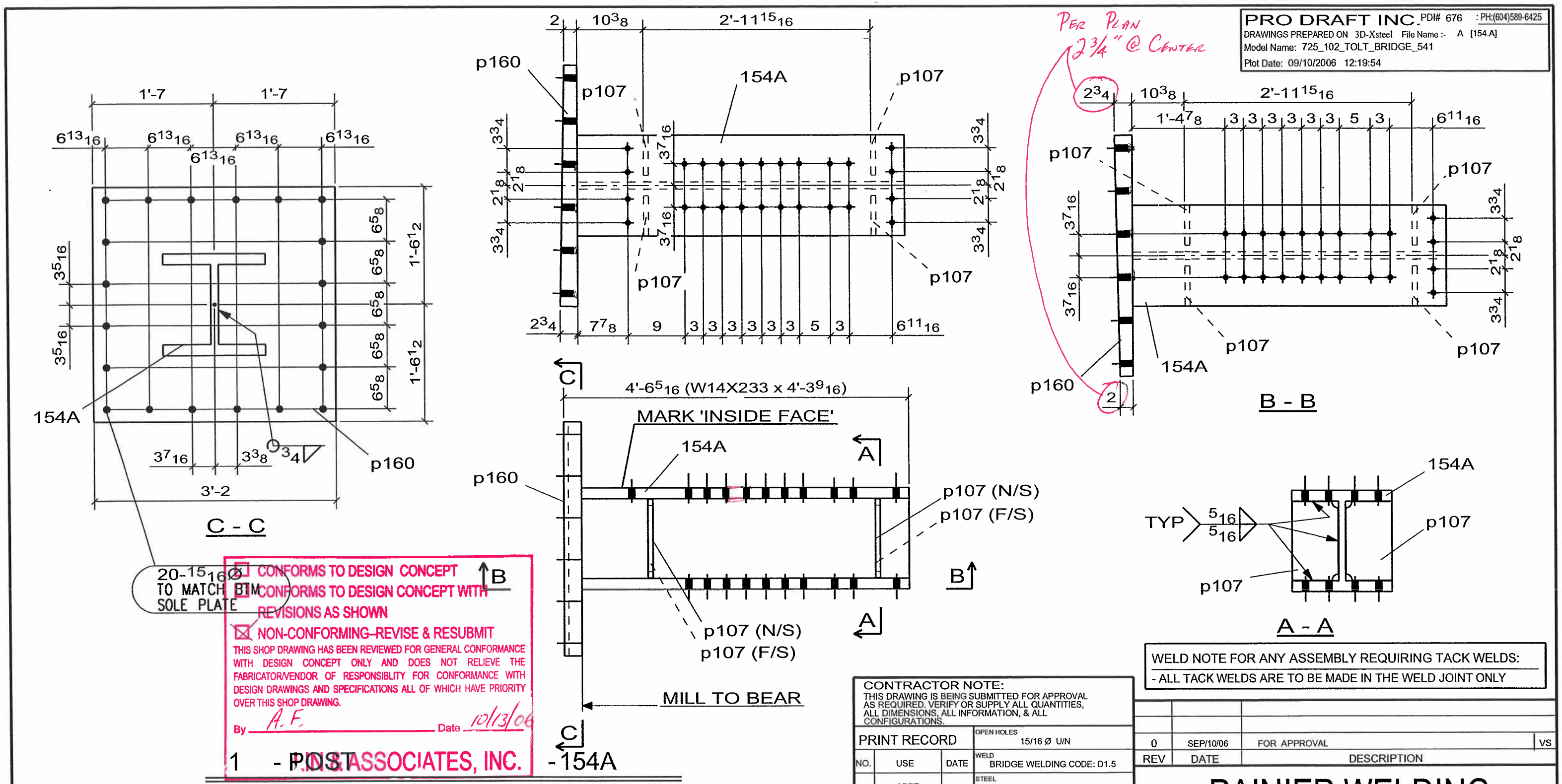

No to SHIP	SHIP MARK	No PIECES	PIECE MARKS	DESCRIPTION	LENGTH	GRADE	REMARKS	WEIGHT	ADVANCE BILL
1	154A			POST				2032	
		1	154A	W14X233	4'-3 9/16"	AASHTO M 270 GR. 50		1002	
		4	p107	PL3/4X7 5/16 TAPERED ?	1'-0 7/16"	AASHTO M 270 GR. 50		19	
		1	p160	PL2 3/4X37	3'-2"	AASHTO M 270 GR. 50		953	
				NOT SUFFICIENT THK					

CONTRACTOR NOTE:
THIS DRAWING IS BEING SUBMITTED FOR APPROVAL AS REQUIRED. VERIFY OR SUPPLY ALL QUANTITIES, ALL DIMENSIONS, ALL INFORMATION, & ALL CONFIGURATIONS.

PRINT RECORD

NO.	USE	DATE
	APPR.	
	APPR.	
	PURCH	
	FAB	
	FAB. OFFICE	
	Q.A.	
	DIST.	
	ERECT.	

OPEN HOLES 15/16 Ø U/N
WELD BRIDGE WELDING CODE: D1.5
STEEL AS NOTED
BOLTS
SURFACE PREP-SP
PAINT SEE SPECS
REF.DRAWING E6

REV	DATE	DESCRIPTION	
0	SEP/10/06	FOR APPROVAL	VS

RAINIER WELDING

19020 NE 84TH STREET - REDMOND, WA 98053
(425) 868-1300 FAX (425) 868-8872
STEEL AND ALUMINUM FABRICATING

PROJECT TOLT BRIDGE No 1834A
THIS DRAWING INCLUDES
FOR SNOHOMISH COUNTY OFFICIAL

DRAWN DJ DATE 07/31/2006 | CHK DSC DATE 09/10/2006 | DWG NUMBER 2707 - 154A 0

PRO DRAFT INC. PDI# 676 : PH:(604)589-6425
DRAWINGS PREPARED ON 3D-Xsteel File Name :- A [155.A]
Model Name: 725_102_TOLT_BRIDGE_541
Plot Date: 09/10/2006 12:19:57

☐ CONFORMS TO DESIGN CONCEPT
☒ CONFORMS TO DESIGN CONCEPT WITH REVISIONS AS SHOWN
☐ NON-CONFORMING–REVISE & RESUBMIT
THIS SHOP DRAWING HAS BEEN REVIEWED FOR GENERAL CONFORMANCE WITH DESIGN CONCEPT ONLY AND DOES NOT RELIEVE THE FABRICATOR/VENDOR OF RESPONSIBLITY FOR CONFORMANCE WITH DESIGN DRAWINGS AND SPECIFICATIONS ALL OF WHICH HAVE PRIORITY OVER THIS SHOP DRAWING.
By A.F. Date 10/13/06
LIN & ASSOCIATES, INC.

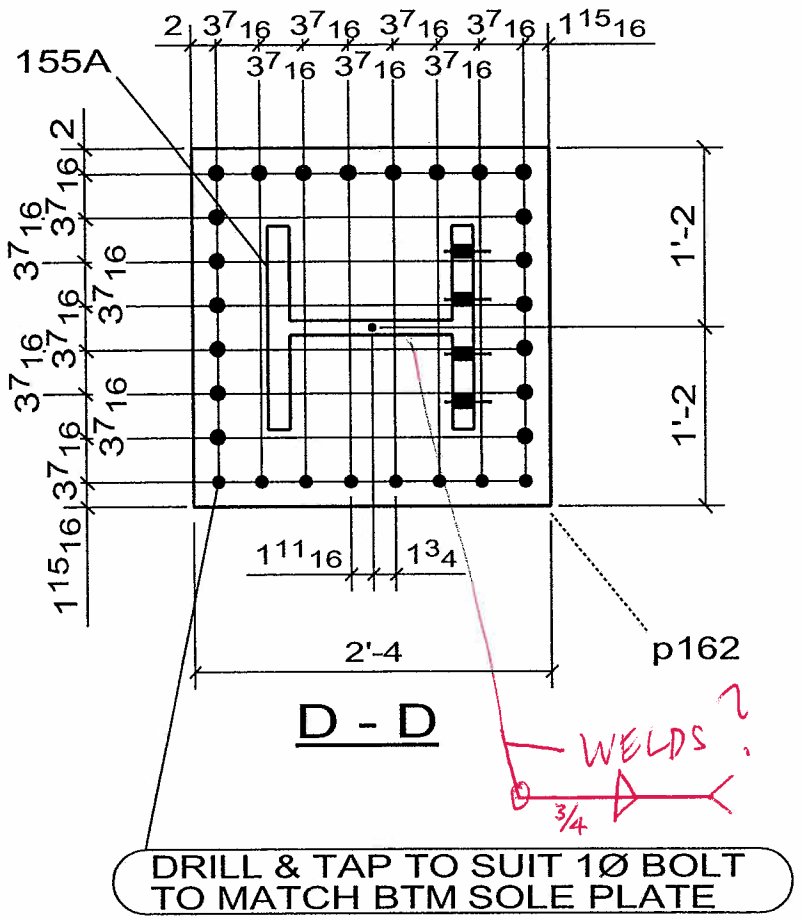

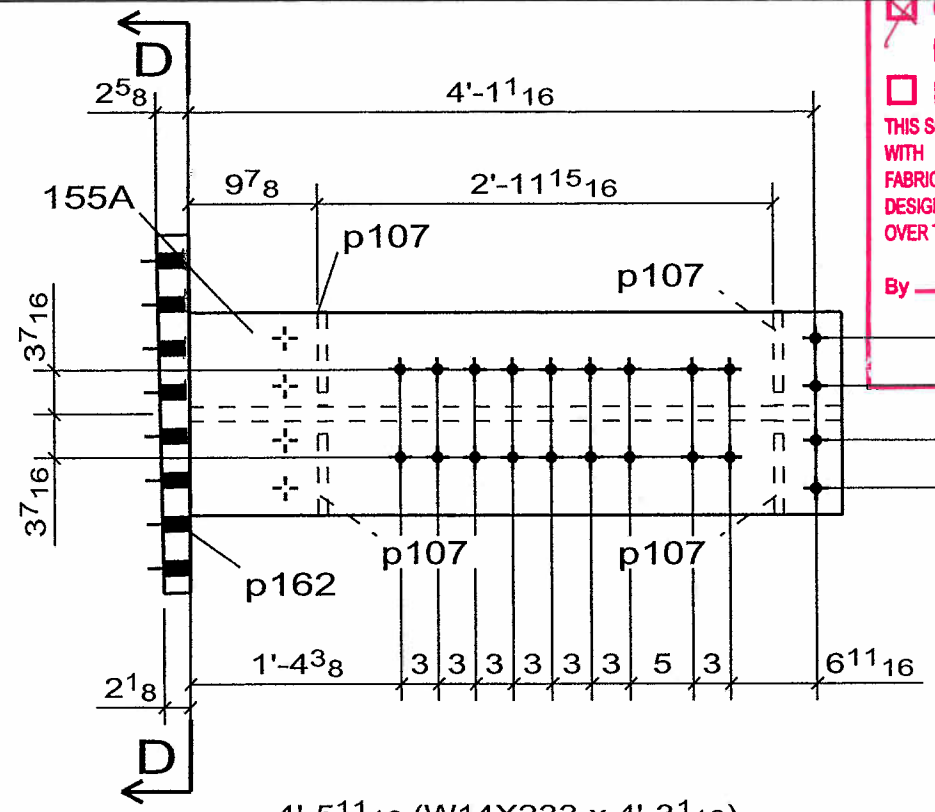

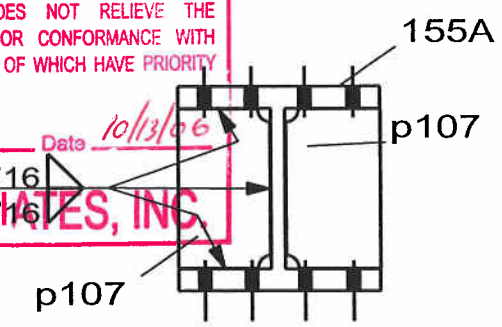

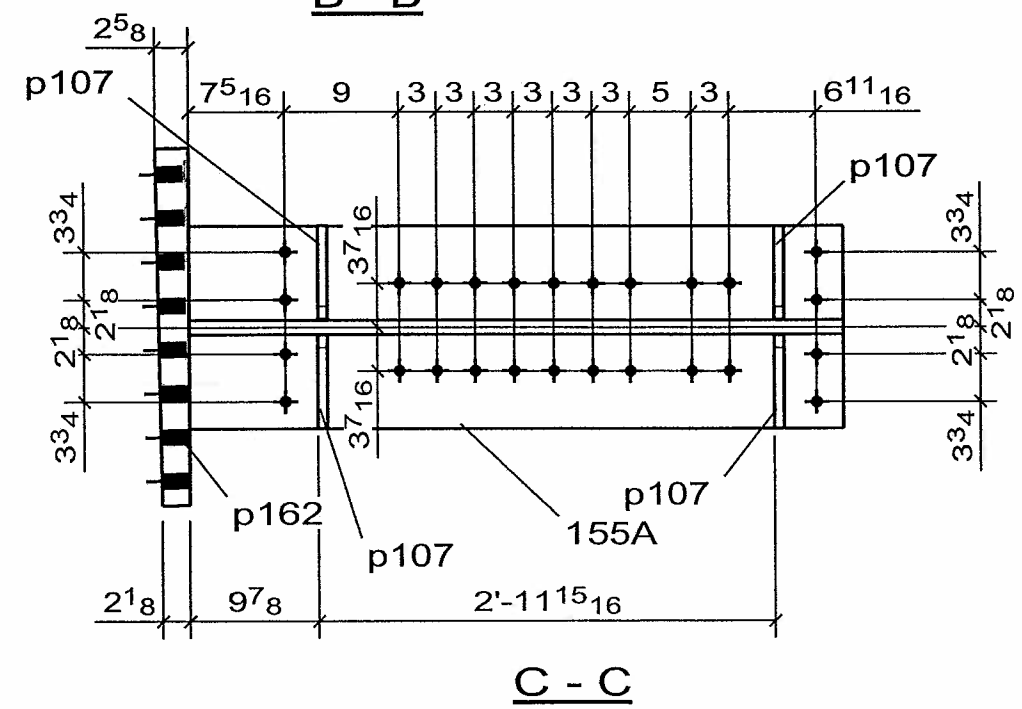

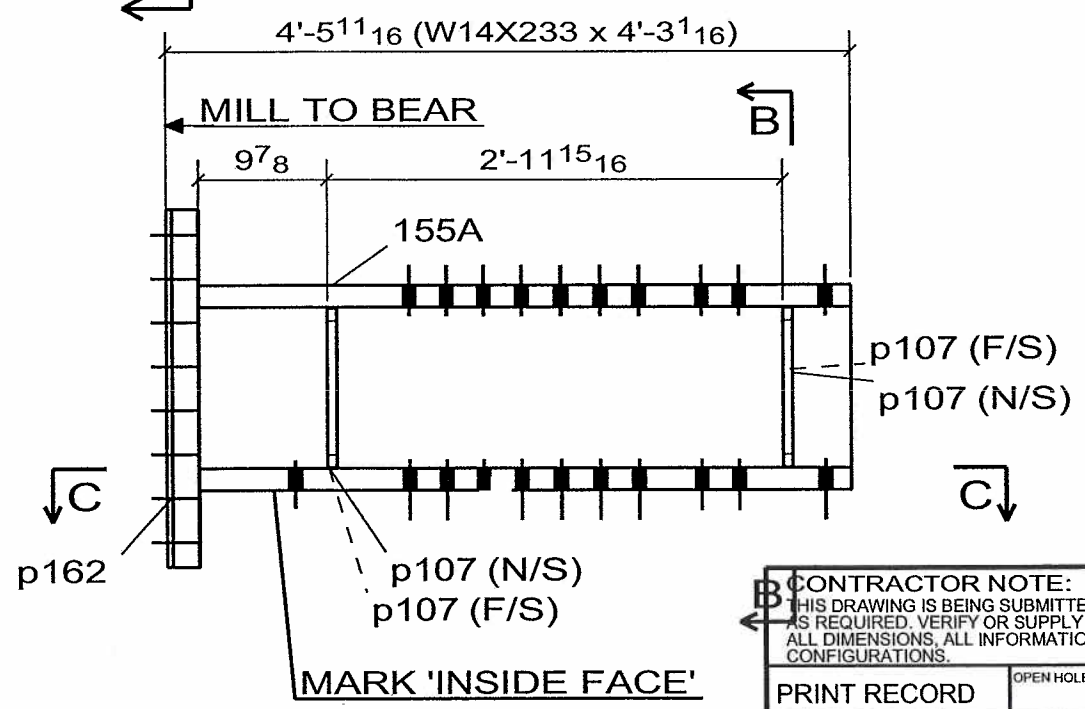

1 - POST -155A

No to SHIP	SHIP MARK	No PIECES	PIECE MARKS	DESCRIPTION	LENGTH	GRADE	REMARKS	WEIGHT	ADVANCE BILL
1	155A			POST				1601	
		1	155A	W14X233	4'-3 1/16"	AASHTO M 270 GR. 50		992	
		4	p107	PL3/4X7 5/16	1'-0 7/16"	AASHTO M 270 GR. 50		19	
		1	p162	PL2 3/4X28 TAPERED	2'-4"	AASHTO M 270 GR. 50		531	

CONTRACTOR NOTE:
THIS DRAWING IS BEING SUBMITTED FOR APPROVAL AS REQUIRED. VERIFY OR SUPPLY ALL QUANTITIES, ALL DIMENSIONS, ALL INFORMATION, & ALL CONFIGURATIONS.

PRINT RECORD

NO.	USE	DATE
	APPR.	
	APPR.	
	PURCH	
	FAB	
	FAB. OFFICE	
	Q.A.	
	DIST.	
	ERECT.	

OPEN HOLES: 15/16 Ø U/N
WELD: BRIDGE WELDING CODE: D1.5
STEEL: AS NOTED
BOLTS:
SURFACE PREP-SP:
PAINT: SEE SPECS
REF.DRAWING: E7

WELD NOTE FOR ANY ASSEMBLY REQUIRING TACK WELDS:
- ALL TACK WELDS ARE TO BE MADE IN THE WELD JOINT ONLY

REV	DATE	DESCRIPTION	
0	SEP/10/06	FOR APPROVAL	VS

RAINIER WELDING

19020 NE 84TH STREET - REDMOND, WA 98053
(425) 868-1300 FAX (425) 868-8872
STEEL AND ALUMINUM FABRICATING

PROJECT: TOLT BRIDGE No 1834A
THIS DRAWING INCLUDES:
FOR: SNOHOMISH COUNTY OFFICIAL
DRAWN DATE 07/31/2006 | CHK DATE 09/10/2006 | DWG NUMBER 2707 - 155A | 0

PRO DRAFT INC. PDI# 676 : PH:(604)589-6425
DRAWINGS PREPARED ON 3D-Xsteel File Name :- A [181.A]
Model Name: 725_102_TOLT_BRIDGE_541
Plot Date: 09/10/2006 12:19:58

☐ CONFORMS TO DESIGN CONCEPT
☒ CONFORMS TO DESIGN CONCEPT WITH REVISIONS AS SHOWN
☐ NON-CONFORMING–REVISE & RESUBMIT

THIS SHOP DRAWING HAS BEEN REVIEWED FOR GENERAL CONFORMANCE WITH DESIGN CONCEPT ONLY AND DOES NOT RELIEVE THE FABRICATOR/VENDOR OF RESPONSIBLITY FOR CONFORMANCE WITH DESIGN DRAWINGS AND SPECIFICATIONS ALL OF WHICH HAVE PRIORITY OVER THIS SHOP DRAWING.

By A. F. Date 10/13/06

LIN & ASSOCIATES, INC.

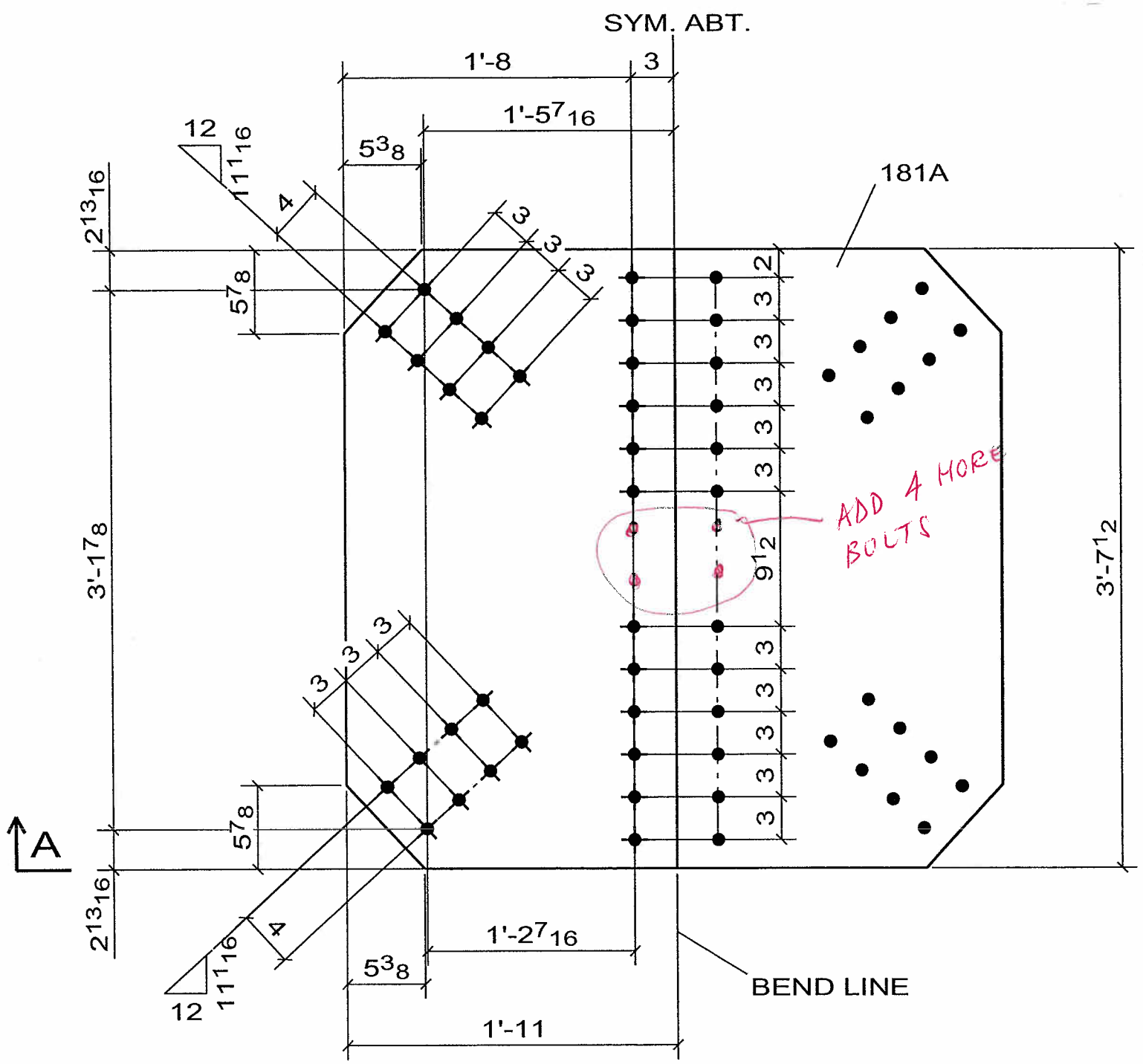

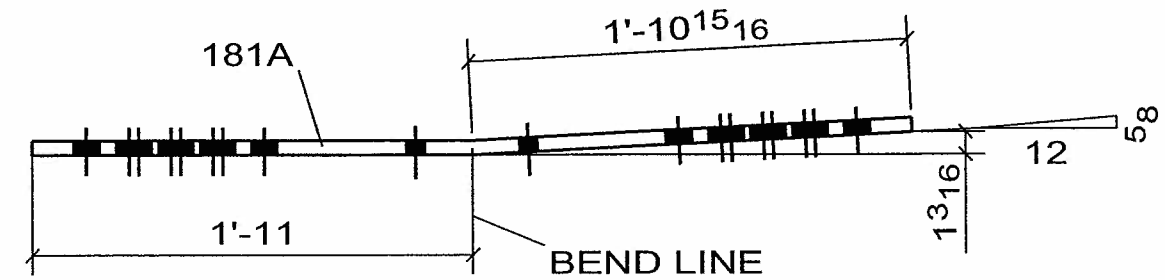

A - A

WELD NOTE FOR ANY ASSEMBLY REQUIRING TACK WELDS:
- ALL TACK WELDS ARE TO BE MADE IN THE WELD JOINT ONLY

CONTRACTOR NOTE:
THIS DRAWING IS BEING SUBMITTED FOR APPROVAL AS REQUIRED. VERIFY OR SUPPLY ALL QUANTITIES, ALL DIMENSIONS, ALL INFORMATION, & ALL CONFIGURATIONS.

PRINT RECORD

NO.	USE	DATE
	APPR.	
	APPR.	
	PURCH	
	FAB	
	FAB. OFFICE	
	Q.A.	
	DIST.	
	ERECT.	

OPEN HOLES: 15/16 Ø U/N
WELD: BRIDGE WELDING CODE: D1.5
STEEL: AS NOTED
BOLTS:
SURFACE PREP-SP:
PAINT: SEE SPECS
REF.DRAWING: E4

REV	DATE	DESCRIPTION	
0	SEP/10/06	FOR APPROVAL	VS

RAINIER WELDING

19020 NE 84TH STREET - REDMOND, WA 98053
(425) 868-1300 FAX (425) 868-8872
STEEL AND ALUMINUM FABRICATING

PROJECT: TOLT BRIDGE No 1834A
THIS DRAWING INCLUDES:
FOR: SNOHOMISH COUNTY OFFICIAL

DRAWN DJ DATE 07/31/2006 | CHK DSC DATE 09/10/2006 | DWG NUMBER 2707 - 181A | 0

1 - GUSSET_PL -181A

No to SHIP	SHIP MARK	No PIECES	PIECE MARKS	DESCRIPTION	LENGTH	GRADE	REMARKS	WEIGHT	ADVANCE BILL
1	181A			GUSSET_PL				411	
		1	181A	PL3/4X43 1/2 (BEND)	3'-9 15/16"	AASHTO M 270 GR. 50		411	

PRO DRAFT INC. PDI# 676 : PH:(604)589-6425
DRAWINGS PREPARED ON 3D-Xsteel File Name :- A [182.A]
Model Name: 725_102_TOLT_BRIDGE_541
Plot Date: 09/10/2006 12:19:59

☐ CONFORMS TO DESIGN CONCEPT
☒ CONFORMS TO DESIGN CONCEPT WITH REVISIONS AS SHOWN
☐ NON-CONFORMING–REVISE & RESUBMIT

THIS SHOP DRAWING HAS BEEN REVIEWED FOR GENERAL CONFORMANCE WITH DESIGN CONCEPT ONLY AND DOES NOT RELIEVE THE FABRICATOR/VENDOR OF RESPONSIBLITY FOR CONFORMANCE WITH DESIGN DRAWINGS AND SPECIFICATIONS ALL OF WHICH HAVE PRIORITY OVER THIS SHOP DRAWING.

By A.F. Date 10/13/06

LIN & ASSOCIATES, INC.

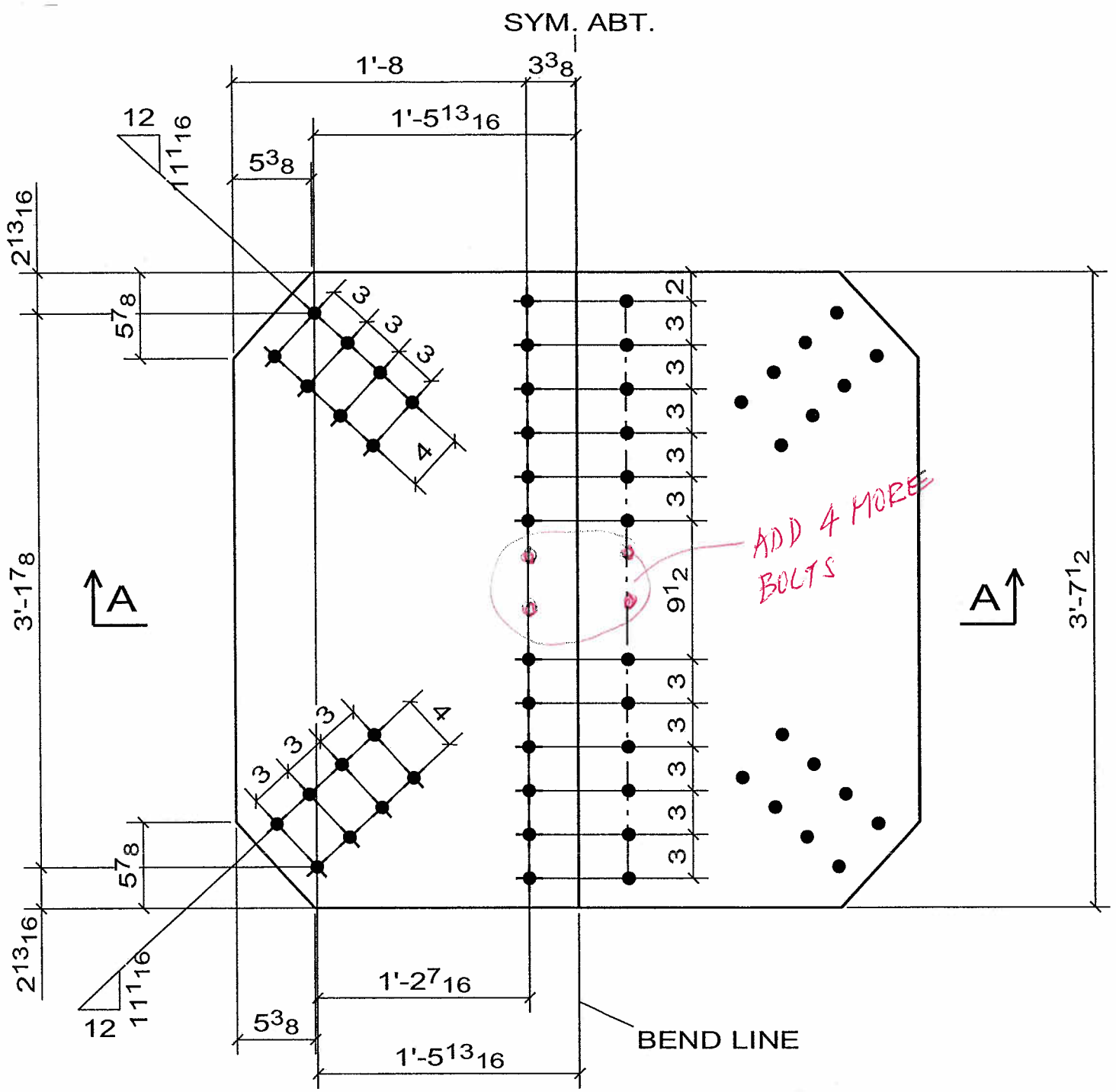

1 - GUSSET_PL - 182A

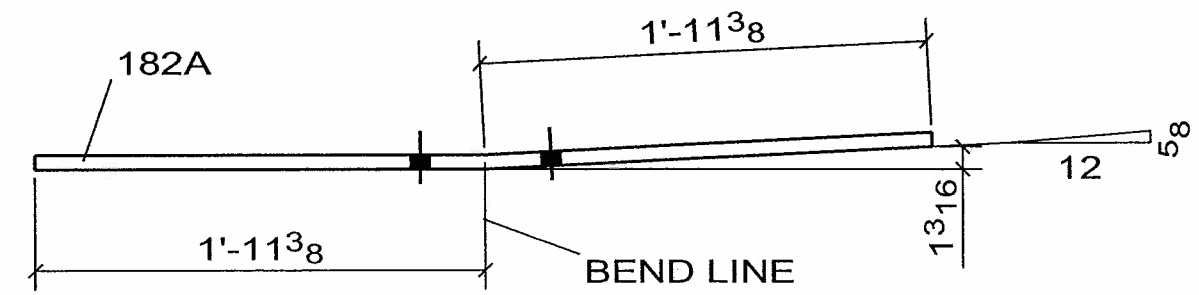

A - A

WELD NOTE FOR ANY ASSEMBLY REQUIRING TACK WELDS:
- ALL TACK WELDS ARE TO BE MADE IN THE WELD JOINT ONLY

CONTRACTOR NOTE:
THIS DRAWING IS BEING SUBMITTED FOR APPROVAL AS REQUIRED. VERIFY OR SUPPLY ALL QUANTITIES, ALL DIMENSIONS, ALL INFORMATION, & ALL CONFIGURATIONS.

PRINT RECORD

NO.	USE	DATE
	APPR.	
	APPR.	
	PURCH	
	FAB	
	FAB. OFFICE	
	Q.A.	
	DIST.	
	ERECT.	

OPEN HOLES: 15/16 Ø U/N
WELD: BRIDGE WELDING CODE: D1.5
STEEL: AS NOTED
BOLTS:
SURFACE PREP-SP:
PAINT: SEE SPECS
REF.DRAWING: E4

REV	DATE	DESCRIPTION	
0	SEP/10/06	FOR APPROVAL	VS

RAINIER WELDING

19020 NE 84TH STREET - REDMOND, WA 98053
(425) 868-1300 FAX (425) 868-8872
STEEL AND ALUMINUM FABRICATING

PROJECT: TOLT BRIDGE No 1834A
THIS DRAWING INCLUDES:
FOR: SNOHOMISH COUNTY OFFICIAL
DRAWN DJ DATE 07/31/2006
CHK DSC DATE 09/10/2006
DWG NUMBER 2707 - 182A △0

No to SHIP	SHIP MARK	No PIECES	PIECE MARKS	DESCRIPTION	LENGTH	GRADE	REMARKS	WEIGHT	ADVANCE BILL
1	182A			GUSSET_PL				418	
		1	182A	PL3/4X43 1/2 BEND	3'-10 3/4"	AASHTO M 270 GR. 50		418	

PRO DRAFT INC. PDI# 676 PH:(604)589-6425
DRAWINGS PREPARED ON 3D-Xsteel File Name :- A [207.A]
Model Name: 725_102_TOLT_BRIDGE_541
Plot Date: 09/10/2006 12:20:00

☐ CONFORMS TO DESIGN CONCEPT
☒ CONFORMS TO DESIGN CONCEPT WITH REVISIONS AS SHOWN
☐ NON-CONFORMING–REVISE & RESUBMIT

THIS SHOP DRAWING HAS BEEN REVIEWED FOR GENERAL CONFORMANCE WITH DESIGN CONCEPT ONLY AND DOES NOT RELIEVE THE FABRICATOR/VENDOR OF RESPONSIBLITY FOR CONFORMANCE WITH DESIGN DRAWINGS AND SPECIFICATIONS ALL OF WHICH HAVE PRIORITY OVER THIS SHOP DRAWING.

By A.F. Date 10/13/06

LIN & ASSOCIATES, INC.

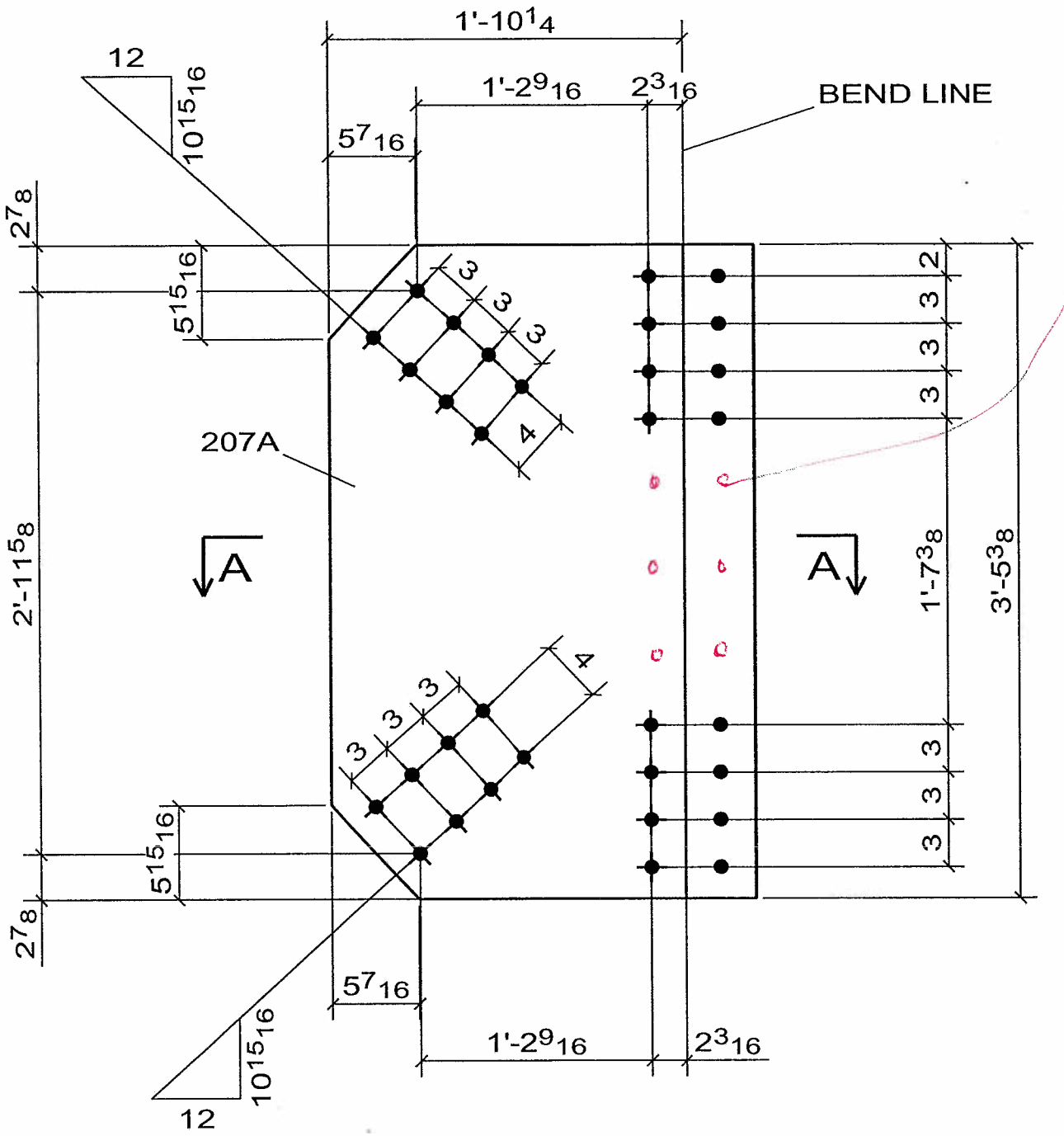

ADD 6 BOLTS @ EQ SP AS SHOWN

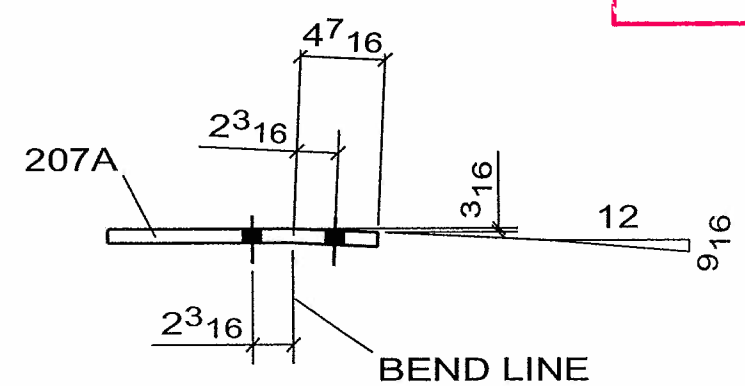

A - A

2 - GUSSET_PL -207A

No to SHIP	SHIP MARK	No PIECES	PIECE MARKS	DESCRIPTION	LENGTH	GRADE	REMARKS	WEIGHT	ADVANCE BILL
2	207A			GUSSET_PL				227	
		2	207A	PL3/4X26 11/16 BEND	3'-5 3/8"	AASHTO M 270 GR. 50		227	

CONTRACTOR NOTE:
THIS DRAWING IS BEING SUBMITTED FOR APPROVAL AS REQUIRED. VERIFY OR SUPPLY ALL QUANTITIES, ALL DIMENSIONS, ALL INFORMATION, & ALL CONFIGURATIONS.

PRINT RECORD

NO.	USE	DATE
	APPR.	
	APPR.	
	PURCH	
	FAB	
	FAB. OFFICE	
	Q.A.	
	DIST.	
	ERECT.	

OPEN HOLES: 15/16 Ø U/N
WELD: BRIDGE WELDING CODE: D1.5
STEEL: AS NOTED
BOLTS:
SURFACE PREP-SP:
PAINT: SEE SPECS
REF.DRAWING: E4, E5

WELD NOTE FOR ANY ASSEMBLY REQUIRING TACK WELDS:
- ALL TACK WELDS ARE TO BE MADE IN THE WELD JOINT ONLY

REV	DATE	DESCRIPTION	
0	SEP/10/06	FOR APPROVAL	VS

RAINIER WELDING
19020 NE 84TH STREET - REDMOND, WA 98053
(425) 868-1300 FAX (425) 868-8872
STEEL AND ALUMINUM FABRICATING

PROJECT: TOLT BRIDGE No 1834A
THIS DRAWING INCLUDES:
FOR: SNOHOMISH COUNTY OFFICIAL
DRAWN DJ DATE 07/31/2006 CHK DSC DATE 09/10/2006 DWG NUMBER 2707 - 207A 0

PRO DRAFT INC. PDI# 676 : PH:(604)589-6425
DRAWINGS PREPARED ON 3D-Xsteel File Name :- A [208.A]
Model Name: 725_102_TOLT_BRIDGE_541
Plot Date: 09/10/2006 12:20:01

CONFORMS TO DESIGN CONCEPT
☒ CONFORMS TO DESIGN CONCEPT WITH REVISIONS AS SHOWN
☐ NON-CONFORMING-REVISE & RESUBMIT
THIS SHOP DRAWING HAS BEEN REVIEWED FOR GENERAL CONFORMANCE WITH DESIGN CONCEPT ONLY AND DOES NOT RELIEVE THE FABRICATOR/VENDOR OF RESPONSIBLITY FOR CONFORMANCE WITH DESIGN DRAWINGS AND SPECIFICATIONS ALL OF WHICH HAVE PRIORITY OVER THIS SHOP DRAWING.
By A.F. Date 10/13/06
LIN & ASSOCIATES, INC.

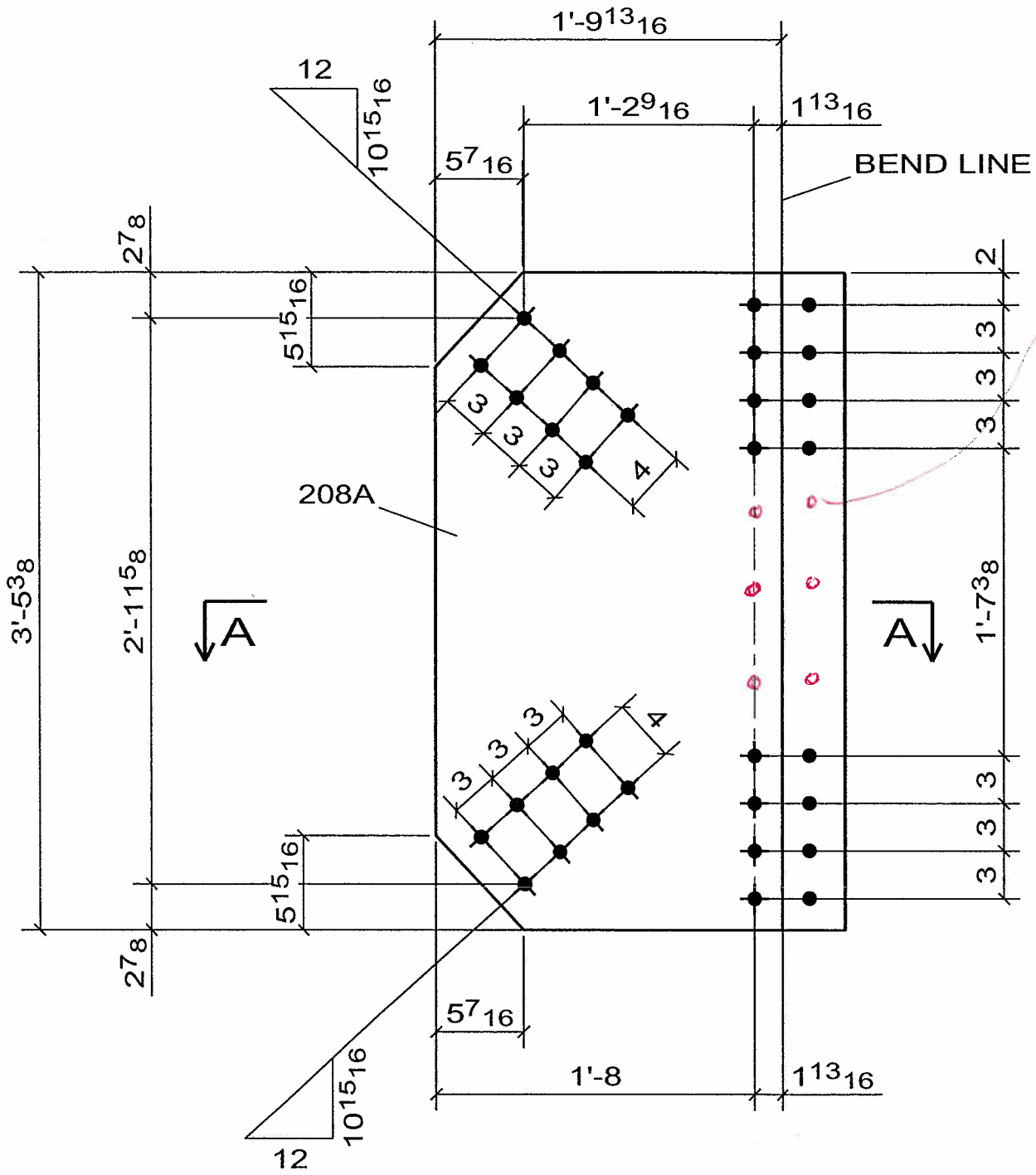

ADD 6 BOLTS @ EQ SP AS SHOWN

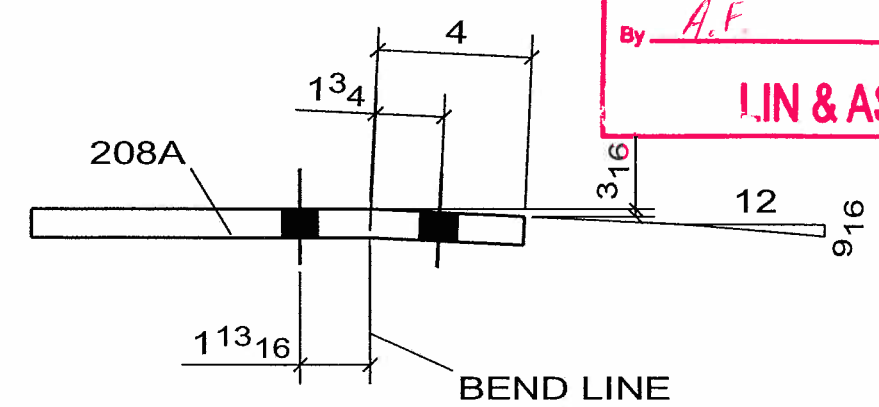

A - A

2 - GUSSET_PL -208A

No to SHIP	SHIP MARK	No PIECES	PIECE MARKS	DESCRIPTION	LENGTH	GRADE	-REMARKS	WEIGHT	ADVANCE BILL
2	208A			GUSSET_PL				220	
		2	208A	PL3/4X25 13/16 BEND	3'-5 3/8"	AASHTO M 270 GR. 50		220	

CONTRACTOR NOTE:
THIS DRAWING IS BEING SUBMITTED FOR APPROVAL AS REQUIRED. VERIFY OR SUPPLY ALL QUANTITIES, ALL DIMENSIONS, ALL INFORMATION, & ALL CONFIGURATIONS.

PRINT RECORD

NO.	USE	DATE
	APPR.	
	APPR.	
	PURCH	
	FAB	
	FAB. OFFICE	
	Q.A.	
	DIST.	
	ERECT.	

OPEN HOLES: 15/16 Ø U/N
WELD: BRIDGE WELDING CODE: D1.5
STEEL: AS NOTED
BOLTS:
SURFACE PREP-SP:
PAINT: SEE SPECS
REF.DRAWING: E4, E5

WELD NOTE FOR ANY ASSEMBLY REQUIRING TACK WELDS:
- ALL TACK WELDS ARE TO BE MADE IN THE WELD JOINT ONLY

REV	DATE	DESCRIPTION	
0	SEP/10/06	FOR APPROVAL	VS

RAINIER WELDING
19020 NE 84TH STREET - REDMOND, WA 98053
(425) 868-1300 FAX (425) 868-8872
STEEL AND ALUMINUM FABRICATING

PROJECT: TOLT BRIDGE No 1834A
THIS DRAWING INCLUDES:
FOR: SNOHOMISH COUNTY OFFICIAL
DRAWN DJ DATE 07/31/2006 CHK DSC DATE 09/10/2006 DWG NUMBER 2707 - 208A △0

PRO DRAFT INC. PDI# 676 : PH:(604)589-6425
DRAWINGS PREPARED ON 3D-Xsteel File Name :- A [209.A]
Model Name: 725_102_TOLT_BRIDGE_541
Plot Date: 09/10/2006 12:20:02

☐ CONFORMS TO DESIGN CONCEPT
☒ CONFORMS TO DESIGN CONCEPT WITH REVISIONS AS SHOWN
☐ NON-CONFORMING–REVISE & RESUBMIT

THIS SHOP DRAWING HAS BEEN REVIEWED FOR GENERAL CONFORMANCE WITH DESIGN CONCEPT ONLY AND DOES NOT RELIEVE THE FABRICATOR/VENDOR OF RESPONSIBLITY FOR CONFORMANCE WITH DESIGN DRAWINGS AND SPECIFICATIONS ALL OF WHICH HAVE PRIORITY OVER THIS SHOP DRAWING.

By A.F. Date 10/13/06

LIN & ASSOCIATES, INC.

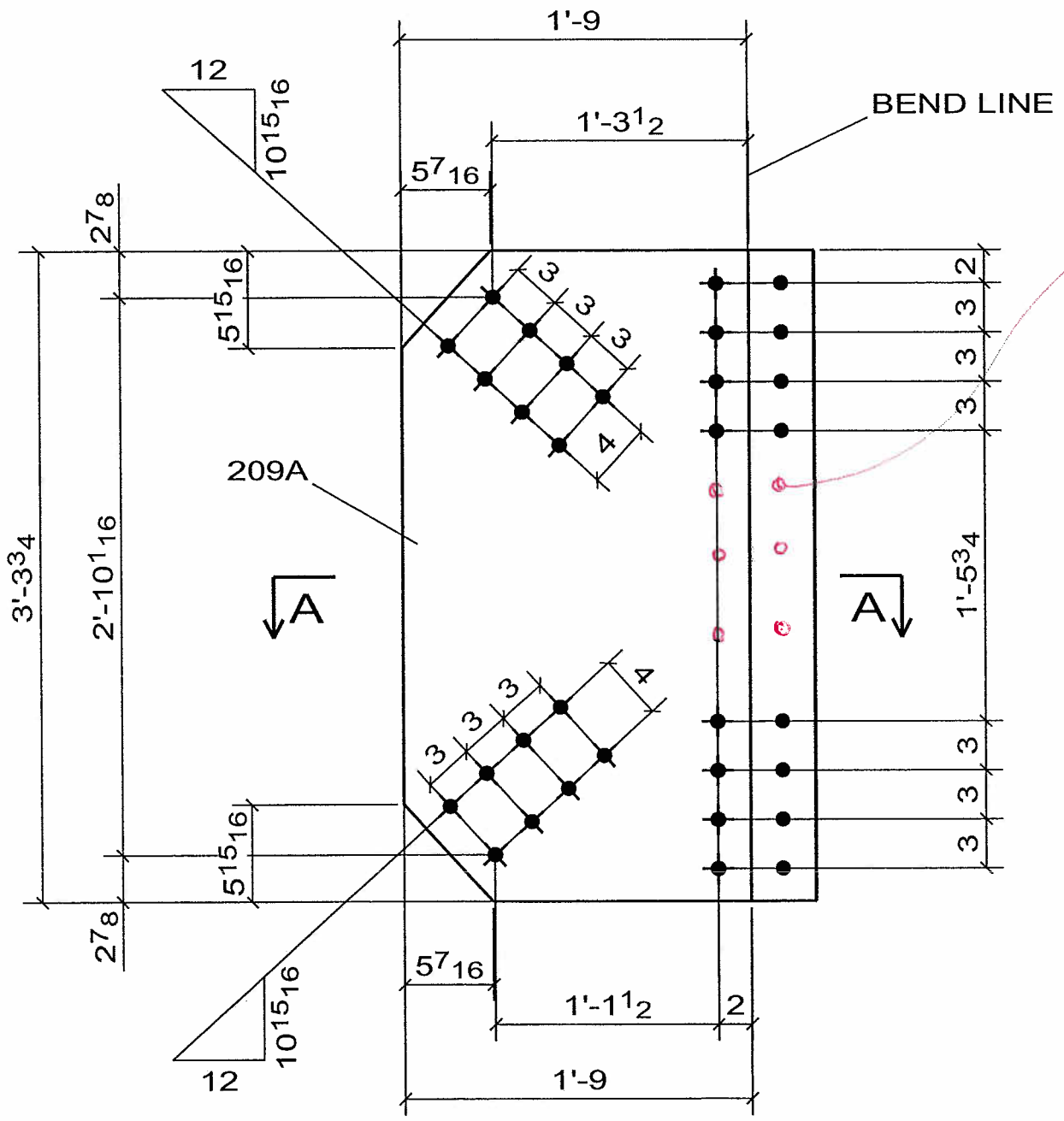

2 - GUSSET_PL -209A

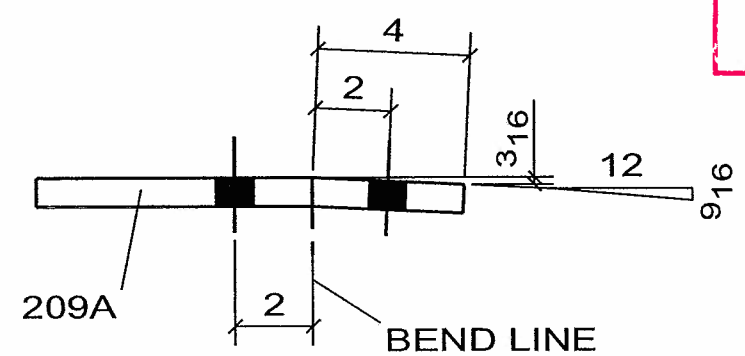

A - A

WELD NOTE FOR ANY ASSEMBLY REQUIRING TACK WELDS:
- ALL TACK WELDS ARE TO BE MADE IN THE WELD JOINT ONLY

CONTRACTOR NOTE:
THIS DRAWING IS BEING SUBMITTED FOR APPROVAL AS REQUIRED. VERIFY OR SUPPLY ALL QUANTITIES, ALL DIMENSIONS, ALL INFORMATION, & ALL CONFIGURATIONS.

PRINT RECORD

NO.	USE	DATE
	APPR.	
	APPR.	
	PURCH	
	FAB	
	FAB. OFFICE	
	Q.A.	
	DIST	
	ERECT.	

OPEN HOLES: 15/16 Ø U/N
WELD: BRIDGE WELDING CODE: D1.5
STEEL: AS NOTED
BOLTS:
SURFACE PREP-SP:
PAINT: SEE SPECS
REF.DRAWING: E4, E5

REV	DATE	DESCRIPTION	
0	SEP/10/06	FOR APPROVAL	VS

RAINIER WELDING

19020 NE 84TH STREET - REDMOND, WA 98053
(425) 868-1300 FAX (425) 868-8872
STEEL AND ALUMINUM FABRICATING

PROJECT: TOLT BRIDGE No 1834A
THIS DRAWING INCLUDES:
FOR: SNOHOMISH COUNTY OFFICIAL
DRAWN DJ DATE 07/31/2006 CHK DSC DATE 09/10/2006 DWG NUMBER 2707 - 209A 0

No to SHIP	SHIP MARK	No PIECES	PIECE MARKS	DESCRIPTION	LENGTH	GRADE	REMARKS	WEIGHT	ADVANCE BILL
2	209A			GUSSET_PL				204	
		2	209A	PL3/4X25 BEND	3'-3 3/4"	AASHTO M 270 GR. 50		204	

PRO DRAFT INC. PDI# 676 : PH:(604)589-6425
DRAWINGS PREPARED ON 3D-Xsteel File Name :- A [210.A]
Model Name: 725_102_TOLT_BRIDGE_541
Plot Date: 09/10/2006 12:20:03

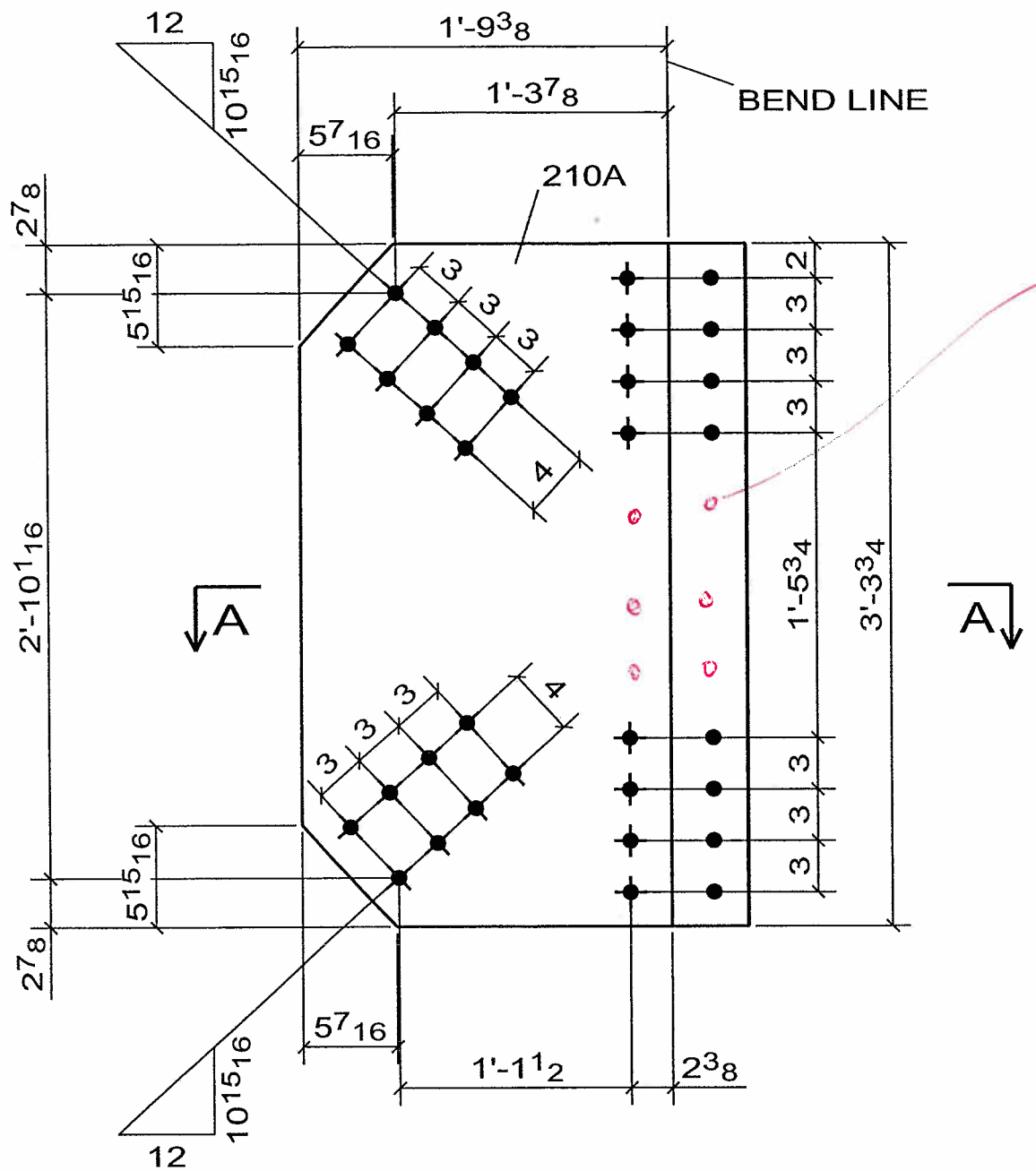

ADD 6 BOLTS
@ EQ SP AS SHOWN

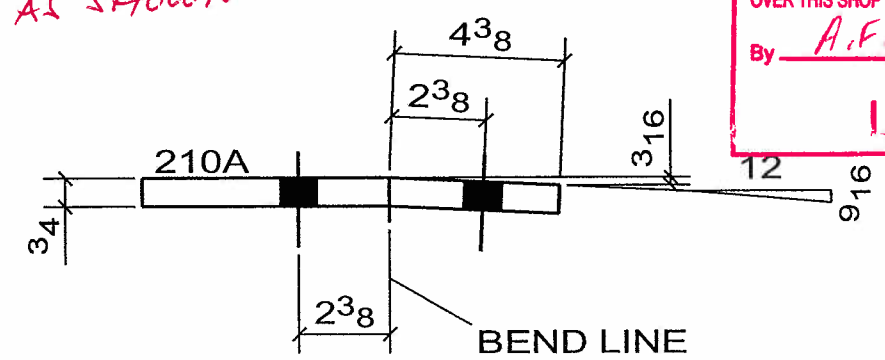

A - A

CONFORMS TO DESIGN CONCEPT
☒ CONFORMS TO DESIGN CONCEPT WITH REVISIONS AS SHOWN
☐ NON-CONFORMING-REVISE & RESUBMIT
THIS SHOP DRAWING HAS BEEN REVIEWED FOR GENERAL CONFORMANCE WITH DESIGN CONCEPT ONLY AND DOES NOT RELIEVE THE FABRICATOR/VENDOR OF RESPONSIBLITY FOR CONFORMANCE WITH DESIGN DRAWINGS AND SPECIFICATIONS ALL OF WHICH HAVE PRIORITY OVER THIS SHOP DRAWING.
By A.F. Date 10/13/06
LIN & ASSOCIATES, INC.

2 - GUSSET_PL -210A

No to SHIP	SHIP MARK	No PIECES	PIECE MARKS	DESCRIPTION	LENGTH	GRADE	REMARKS	WEIGHT	ADVANCE BILL
2	210A			GUSSET_PL				211	
		2	210A	PL3/4X25 3/4 BEND	3'-3 3/4"	AASHTO M 270 GR. 50		211	

CONTRACTOR NOTE:
THIS DRAWING IS BEING SUBMITTED FOR APPROVAL AS REQUIRED. VERIFY OR SUPPLY ALL QUANTITIES, ALL DIMENSIONS, ALL INFORMATION, & ALL CONFIGURATIONS.

PRINT RECORD

NO.	USE	DATE
	APPR.	
	APPR.	
	PURCH	
	FAB	
	FAB. OFFICE	
	Q.A.	
	DIST.	
	ERECT.	

OPEN HOLES: 15/16 Ø U/N
WELD: BRIDGE WELDING CODE: D1.5
STEEL: AS NOTED
BOLTS:
SURFACE PREP-SP:
PAINT: SEE SPECS
REF.DRAWING: E4, E5

WELD NOTE FOR ANY ASSEMBLY REQUIRING TACK WELDS:
- ALL TACK WELDS ARE TO BE MADE IN THE WELD JOINT ONLY

REV	DATE	DESCRIPTION	
0	SEP/10/06	FOR APPROVAL	VS

RAINIER WELDING

19020 NE 84TH STREET - REDMOND, WA 98053
(425) 868-1300 FAX (425) 868-8872
STEEL AND ALUMINUM FABRICATING

PROJECT: TOLT BRIDGE No 1834A
THIS DRAWING INCLUDES:
FOR: SNOHOMISH COUNTY OFFICIAL
DRAWN DJ DATE 07/31/2006 CHK DSC DATE 09/10/2006 DWG NUMBER 2707 - 210A 0

PRO DRAFT INC. PDI# 676 : PH:(604)589-6425
DRAWINGS PREPARED ON 3D-Xsteel File Name :- A [211.A]
Model Name: 725_102_TOLT_BRIDGE_541
Plot Date: 09/10/2006 12:20:04

☐ CONFORMS TO DESIGN CONCEPT
☒ CONFORMS TO DESIGN CONCEPT WITH REVISIONS AS SHOWN
☐ NON-CONFORMING–REVISE & RESUBMIT

THIS SHOP DRAWING HAS BEEN REVIEWED FOR GENERAL CONFORMANCE WITH DESIGN CONCEPT ONLY AND DOES NOT RELIEVE THE FABRICATOR/VENDOR OF RESPONSIBLITY FOR CONFORMANCE WITH DESIGN DRAWINGS AND SPECIFICATIONS ALL OF WHICH HAVE PRIORITY OVER THIS SHOP DRAWING.

By A.F. Date 10/13/06

LIN & ASSOCIATES, INC.

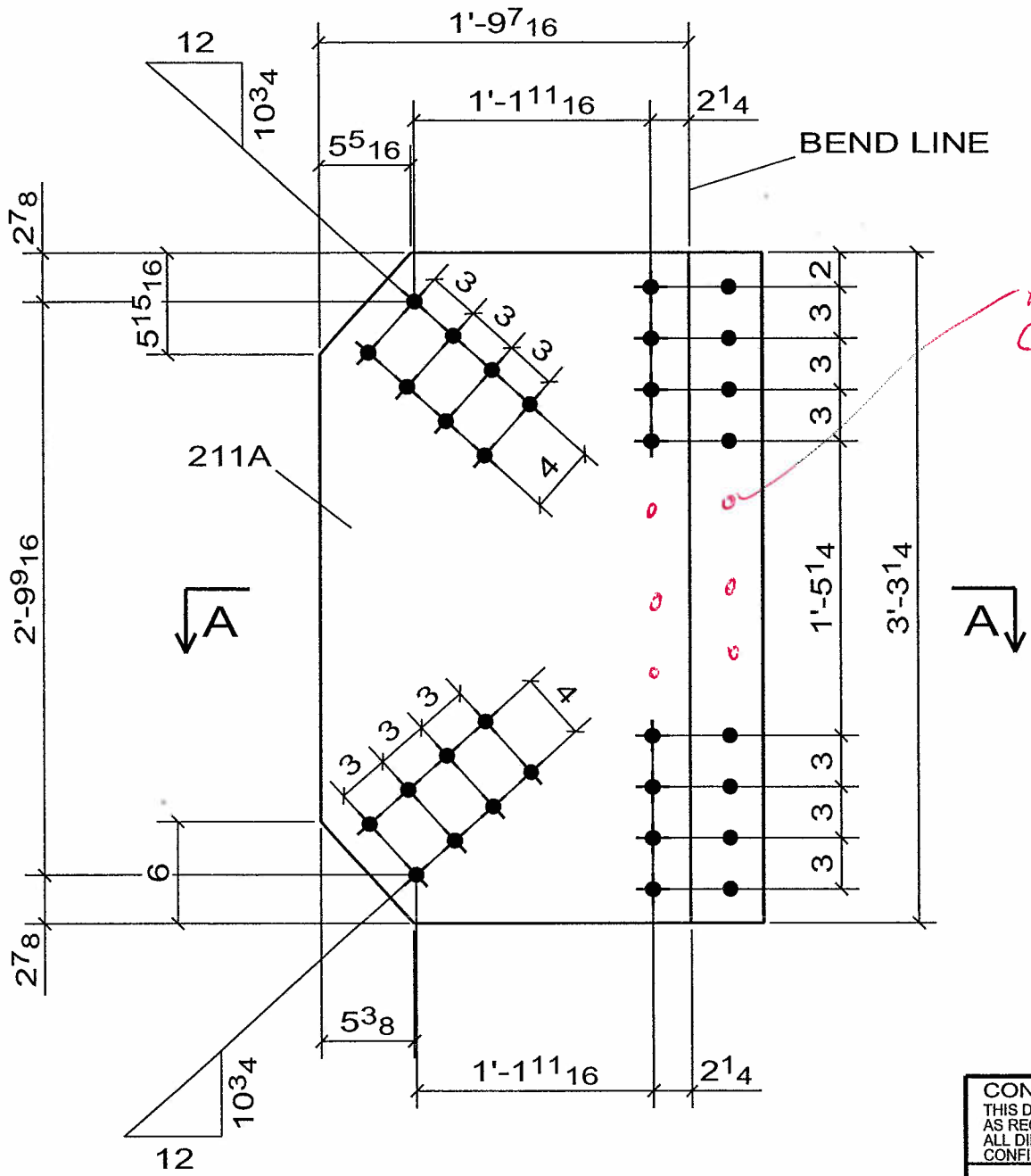

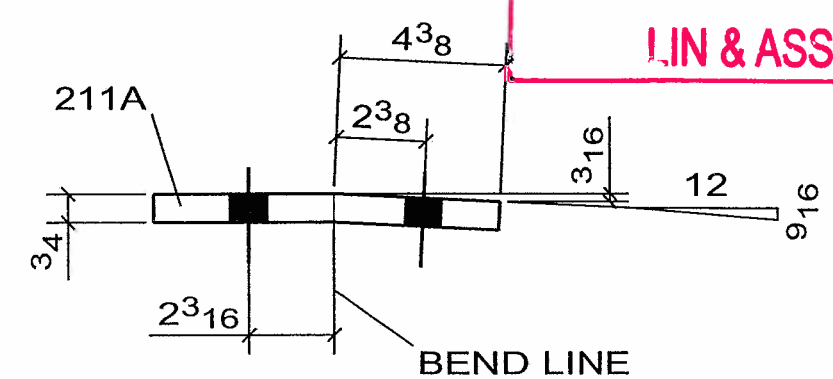

A - A

2 - GUSSET_PL -211A

No to SHIP	SHIP MARK	No PIECES	PIECE MARKS	DESCRIPTION	LENGTH	GRADE	REMARKS	WEIGHT	ADVANCE BILL
2	211A			GUSSET_PL				208	
		2	211A	PL3/4X25 3/4 BEND	3'-3 1/4"	AASHTO M 270 GR. 50		208	

CONTRACTOR NOTE:
THIS DRAWING IS BEING SUBMITTED FOR APPROVAL AS REQUIRED. VERIFY OR SUPPLY ALL QUANTITIES, ALL DIMENSIONS, ALL INFORMATION, & ALL CONFIGURATIONS.

PRINT RECORD

NO.	USE	DATE
	APPR.	
	APPR.	
	PURCH	
	FAB	
	FAB. OFFICE	
	Q.A.	
	DIST.	
	ERECT.	

OPEN HOLES: 15/16 Ø U/N
WELD: BRIDGE WELDING CODE: D1.5
STEEL: AS NOTED
BOLTS:
SURFACE PREP-SP:
PAINT: SEE SPECS
REF.DRAWING: E4, E5

WELD NOTE FOR ANY ASSEMBLY REQUIRING TACK WELDS:
- ALL TACK WELDS ARE TO BE MADE IN THE WELD JOINT ONLY

REV	DATE	DESCRIPTION	
0	SEP/10/06	FOR APPROVAL	VS

RAINIER WELDING

19020 NE 84TH STREET - REDMOND, WA 98053
(425) 868-1300 FAX (425) 868-8872
STEEL AND ALUMINUM FABRICATING

PROJECT: TOLT BRIDGE No 1834A
THIS DRAWING INCLUDES:
FOR: SNOHOMISH COUNTY OFFICIAL

DRAWN DJ DATE 07/31/2006 | CHK DSC DATE 09/10/2006 | DWG NUMBER 2707 - 211A | 0

PRO DRAFT INC. PDI# 676 : PH:(604)589-6425
DRAWINGS PREPARED ON 3D-Xsteel File Name :- A [212.A]
Model Name: 725_102_TOLT_BRIDGE_541
Plot Date: 09/10/2006 12:20:05

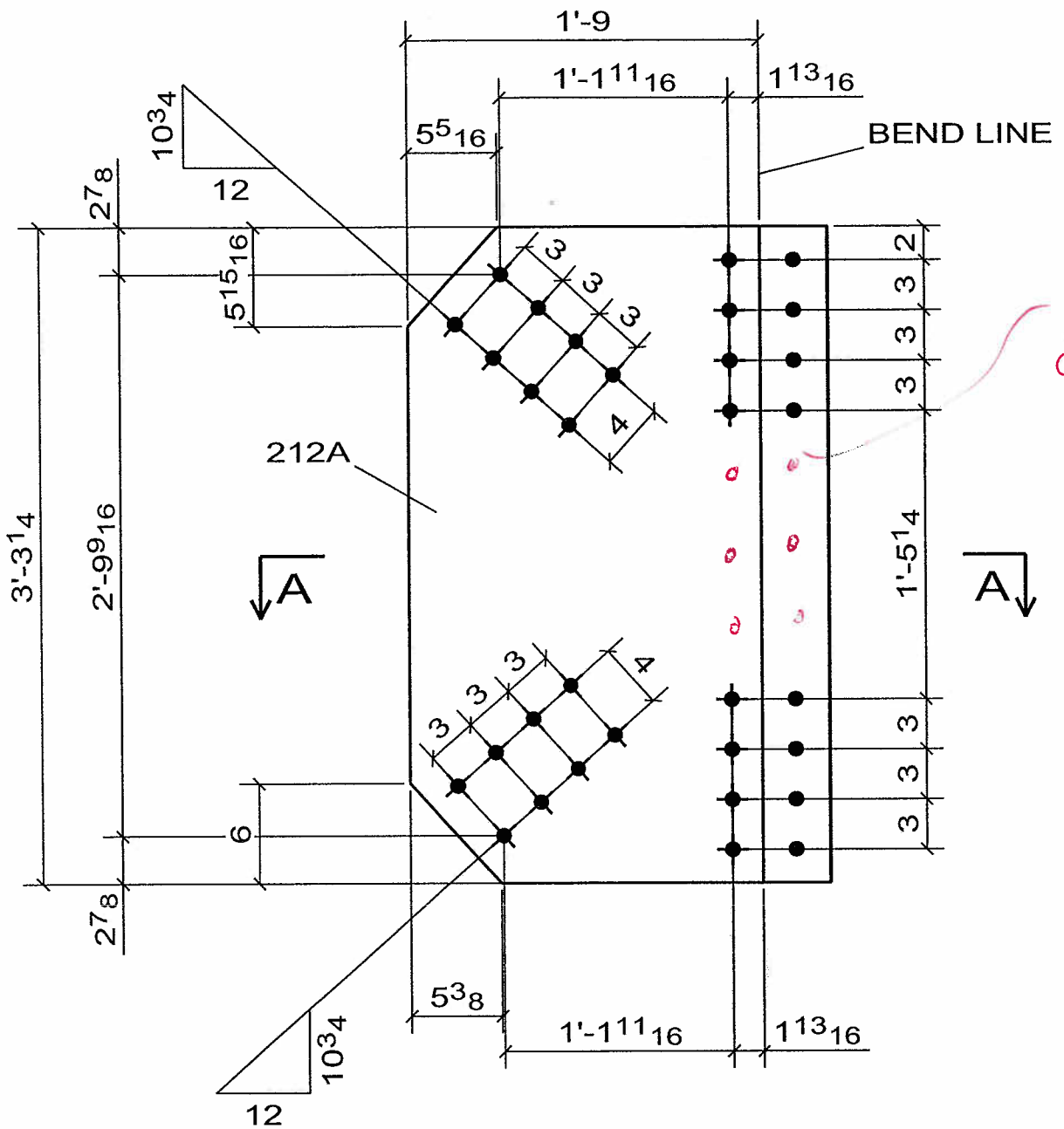

ADD 6 BOLTS @ EQSP AS SHOWN

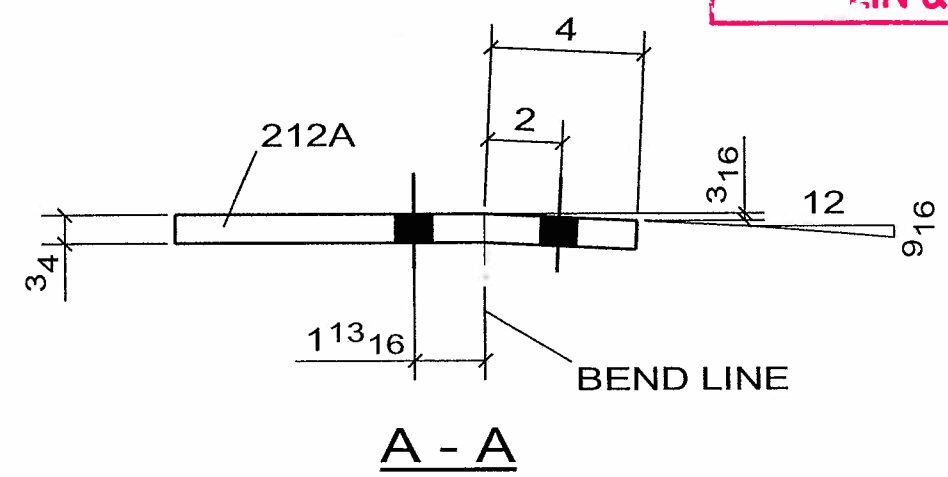

CONFORMS TO DESIGN CONCEPT
☑ CONFORMS TO DESIGN CONCEPT WITH REVISIONS AS SHOWN
☐ NON-CONFORMING–REVISE & RESUBMIT
THIS SHOP DRAWING HAS BEEN REVIEWED FOR GENERAL CONFORMANCE WITH DESIGN CONCEPT ONLY AND DOES NOT RELIEVE THE FABRICATOR/VENDOR OF RESPONSIBLITY FOR CONFORMANCE WITH DESIGN DRAWINGS AND SPECIFICATIONS ALL OF WHICH HAVE PRIORITY OVER THIS SHOP DRAWING.
By A.F. Date 10/13/06
LIN & ASSOCIATES, INC.

WELD NOTE FOR ANY ASSEMBLY REQUIRING TACK WELDS:
- ALL TACK WELDS ARE TO BE MADE IN THE WELD JOINT ONLY

2 - GUSSET_PL -212A

No to SHIP	SHIP MARK	No PIECES	PIECE MARKS	DESCRIPTION	LENGTH	GRADE	REMARKS	WEIGHT	ADVANCE BILL
2	212A			GUSSET_PL				201	
		2	212A	PL3/4X25 BEND	3'-3 1/4"	AASHTO M 270 GR. 50		201	

CONTRACTOR NOTE:
THIS DRAWING IS BEING SUBMITTED FOR APPROVAL AS REQUIRED. VERIFY OR SUPPLY ALL QUANTITIES, ALL DIMENSIONS, ALL INFORMATION, & ALL CONFIGURATIONS.

PRINT RECORD

NO.	USE	DATE
	APPR.	
	APPR.	
	PURCH	
	FAB	
	FAB. OFFICE	
	Q.A.	
	DIST.	
	ERECT.	

OPEN HOLES: 15/16 Ø U/N
WELD: BRIDGE WELDING CODE: D1.5
STEEL: AS NOTED
BOLTS:
SURFACE PREP-SP:
PAINT: SEE SPECS
REF.DRAWING: E4, E5

REV	DATE	DESCRIPTION	
0	SEP/10/06	FOR APPROVAL	VS

RAINIER WELDING

19020 NE 84TH STREET - REDMOND, WA 98053
(425) 868-1300 FAX (425) 868-8872
STEEL AND ALUMINUM FABRICATING

PROJECT: TOLT BRIDGE No 1834A
THIS DRAWING INCLUDES:
FOR: SNOHOMISH COUNTY OFFICIAL
DRAWN DJ DATE 07/31/2006 | CHK DSC DATE 09/10/2006 | DWG NUMBER 2707 - 212A | 0

PRO DRAFT INC PDI# 676 : PH:(604)589-6425
DRAWINGS PREPARED ON 3D-Xsteel File Name :- A [213.A]
Model Name: 725_102_TOLT_BRIDGE_541
Plot Date: 09/10/2006 12:20:06

☑ CONFORMS TO DESIGN CONCEPT
☑ CONFORMS TO DESIGN CONCEPT WITH REVISIONS AS SHOWN
☐ NON-CONFORMING–REVISE & RESUBMIT
THIS SHOP DRAWING HAS BEEN REVIEWED FOR GENERAL CONFORMANCE WITH DESIGN CONCEPT ONLY AND DOES NOT RELIEVE THE FABRICATOR/VENDOR OF RESPONSIBLITY FOR CONFORMANCE WITH DESIGN DRAWINGS AND SPECIFICATIONS ALL OF WHICH HAVE PRIORITY OVER THIS SHOP DRAWING.
By A.F. Date 10/13/06
LIN & ASSOCIATES, INC.

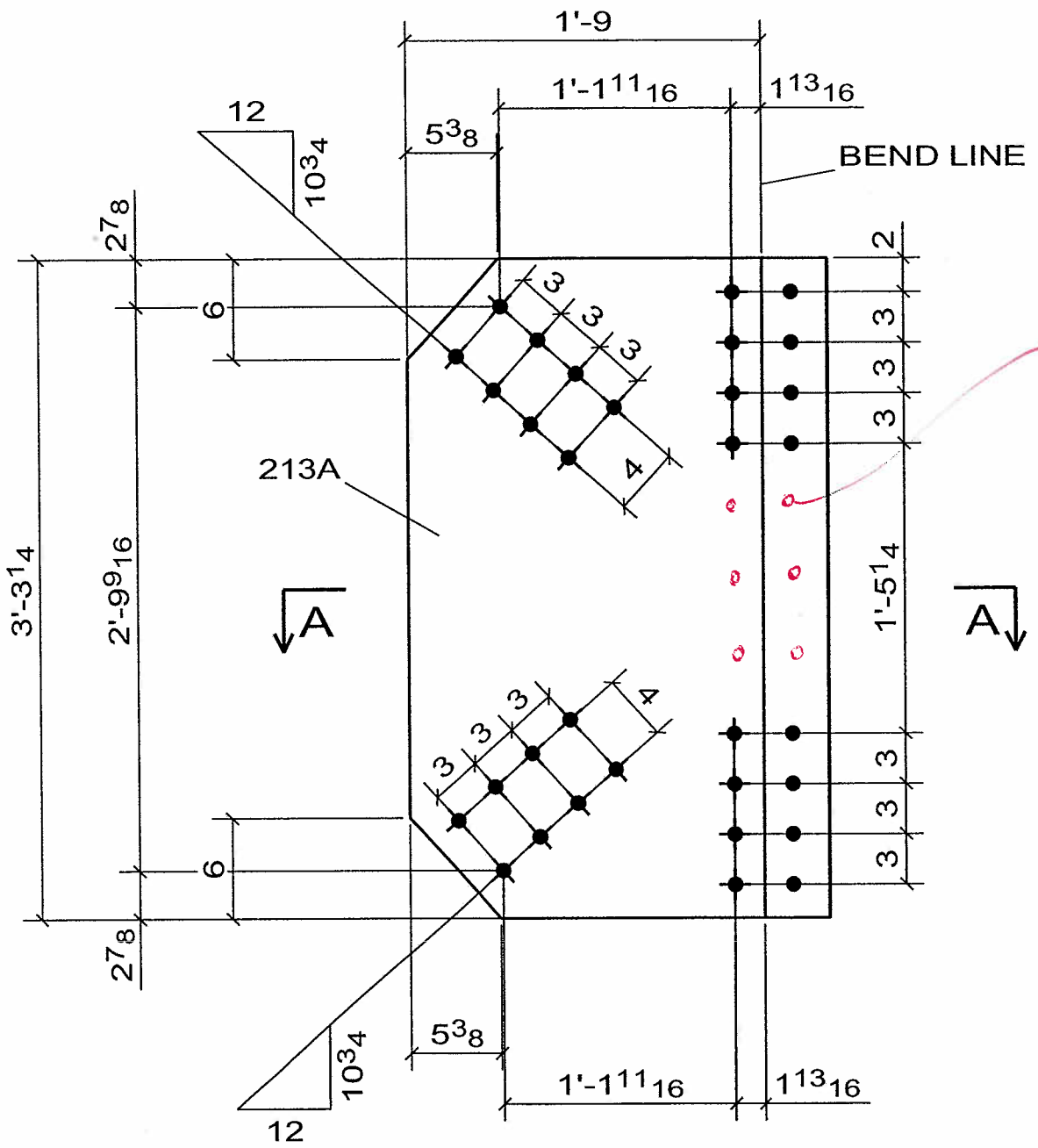

ADD 6 BOLTS @ EQ SP AS SHOWN

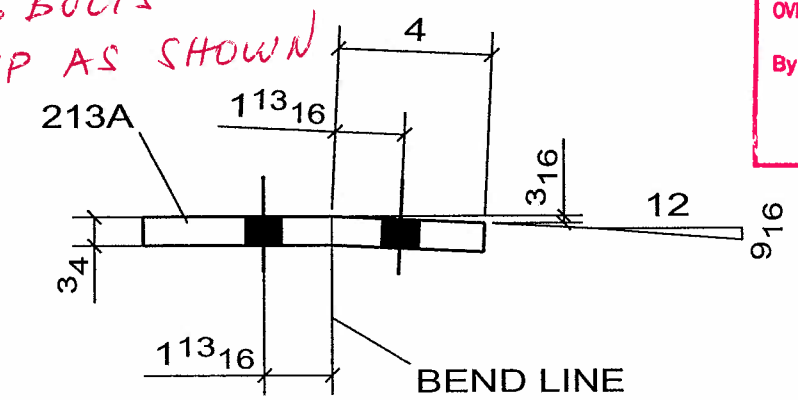

A - A

2 - GUSSET_PL -213A

No to SHIP	SHIP MARK	No PIECES	PIECE MARKS	DESCRIPTION	LENGTH	GRADE	REMARKS	WEIGHT	ADVANCE BILL
2	213A			GUSSET_PL				201	
		2	213A	PL3/4X25 BEND	3'-3 1/4"	AASHTO M 270 GR. 50		201	

CONTRACTOR NOTE:
THIS DRAWING IS BEING SUBMITTED FOR APPROVAL AS REQUIRED. VERIFY OR SUPPLY ALL QUANTITIES, ALL DIMENSIONS, ALL INFORMATION, & ALL CONFIGURATIONS.

PRINT RECORD

NO.	USE	DATE
	APPR.	
	APPR.	
	PURCH	
	FAB	
	FAB. OFFICE	
	Q.A.	
	DIST.	
	ERECT.	

OPEN HOLES: 15/16 Ø U/N
WELD: BRIDGE WELDING CODE: D1.5
STEEL: AS NOTED
BOLTS:
SURFACE PREP-SP:
PAINT: SEE SPECS
REF.DRAWING: E4, E5

WELD NOTE FOR ANY ASSEMBLY REQUIRING TACK WELDS:
- ALL TACK WELDS ARE TO BE MADE IN THE WELD JOINT ONLY

REV	DATE	DESCRIPTION	
0	SEP/10/06	FOR APPROVAL	VS

RAINIER WELDING
19020 NE 84TH STREET - REDMOND, WA 98053
(425) 868-1300 FAX (425) 868-8872
STEEL AND ALUMINUM FABRICATING

PROJECT: TOLT BRIDGE No 1834A
THIS DRAWING INCLUDES:
FOR: SNOHOMISH COUNTY OFFICIAL
DRAWN DJ DATE 07/31/2006 CHK DSC DATE 09/10/2006 DWG NUMBER 2707 - 213A 0

PRO DRAFT INC PDI# 676 : PH:(604)589-6425
DRAWINGS PREPARED ON 3D-Xsteel File Name :- A [214.A]
Model Name: 725_102_TOLT_BRIDGE_541
Plot Date: 09/10/2006 12:20:07

CONFORMS TO DESIGN CONCEPT
☒ CONFORMS TO DESIGN CONCEPT WITH REVISIONS AS SHOWN
☐ NON-CONFORMING–REVISE & RESUBMIT
THIS SHOP DRAWING HAS BEEN REVIEWED FOR GENERAL CONFORMANCE WITH DESIGN CONCEPT ONLY AND DOES NOT RELIEVE THE FABRICATOR/VENDOR OF RESPONSIBLITY FOR CONFORMANCE WITH DESIGN DRAWINGS AND SPECIFICATIONS ALL OF WHICH HAVE PRIORITY OVER THIS SHOP DRAWING.
By A.F. Date 10/12/06
LIN & ASSOCIATES, INC.

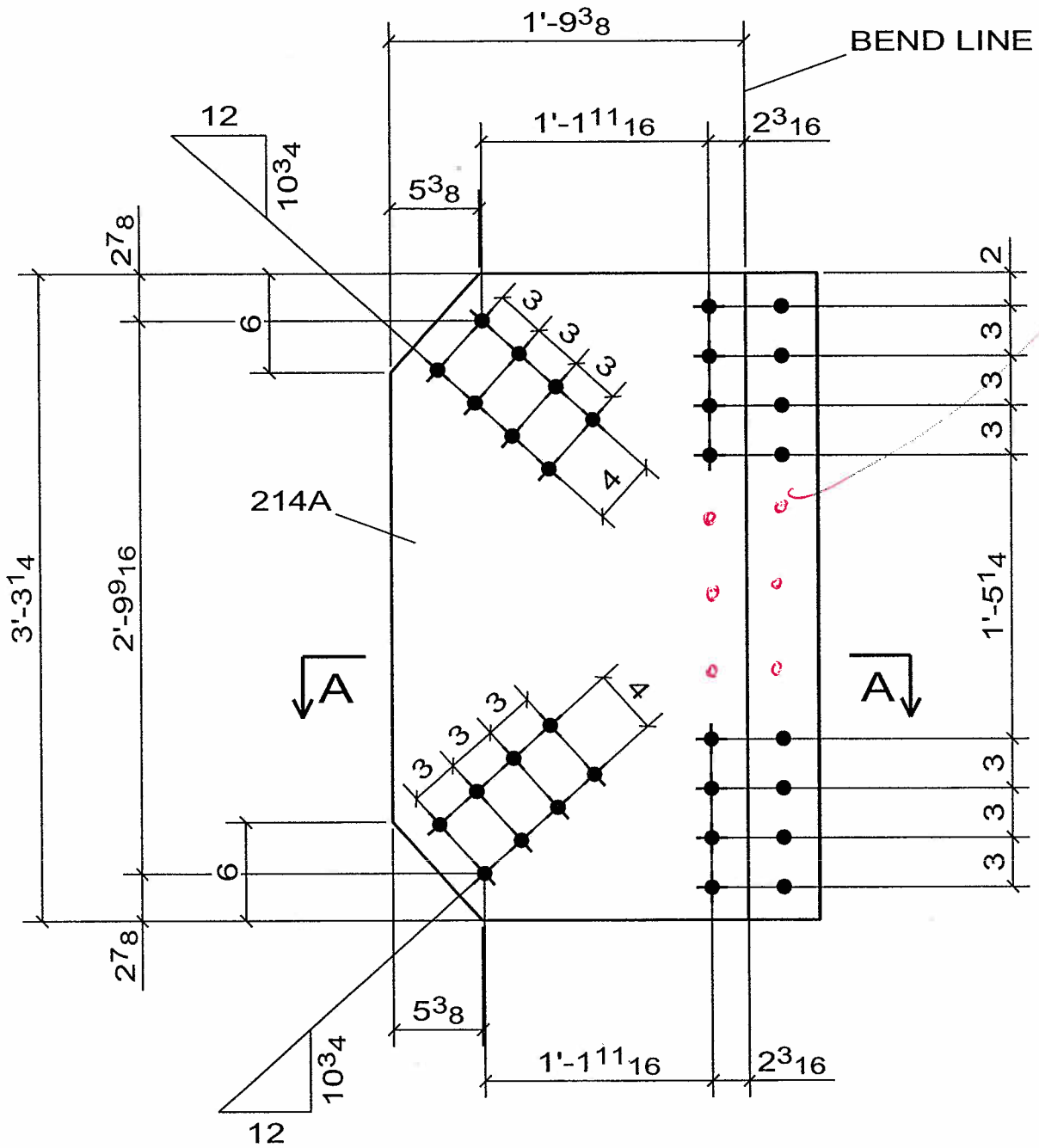

ADD 6 BOLTS @ EQ SP AS SHOWN

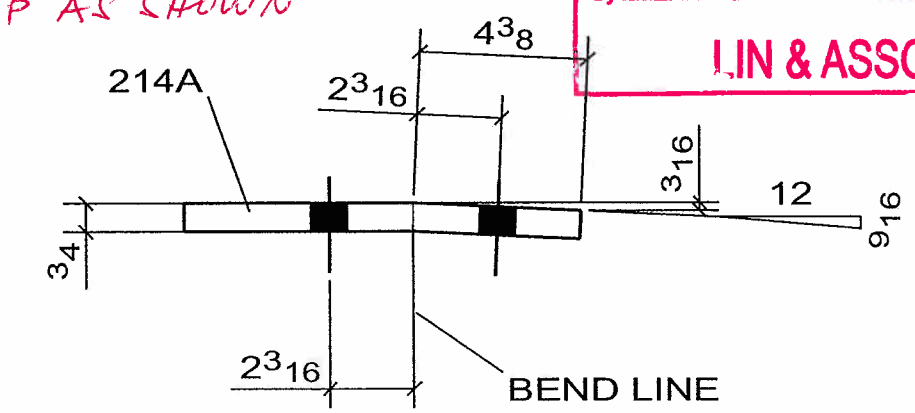

A - A

2 - GUSSET_PL -214A

WELD NOTE FOR ANY ASSEMBLY REQUIRING TACK WELDS:
- ALL TACK WELDS ARE TO BE MADE IN THE WELD JOINT ONLY

No to SHIP	SHIP MARK	No PIECES	PIECE MARKS	DESCRIPTION	LENGTH	GRADE	REMARKS	WEIGHT	ADVANCE BILL
2	214A			GUSSET_PL				208	
		2	214A	PL3/4X25 3/4 BEND	3'-3 1/4"	AASHTO M 270 GR. 50		208	

CONTRACTOR NOTE:
THIS DRAWING IS BEING SUBMITTED FOR APPROVAL AS REQUIRED. VERIFY OR SUPPLY ALL QUANTITIES, ALL DIMENSIONS, ALL INFORMATION, & ALL CONFIGURATIONS.

PRINT RECORD

NO.	USE	DATE
	APPR.	
	APPR.	
	PURCH	
	FAB	
	FAB. OFFICE	
	Q.A.	
	DIST.	
	ERECT.	

OPEN HOLES 15/16 Ø U/N
WELD BRIDGE WELDING CODE: D1.5
STEEL AS NOTED
BOLTS
SURFACE PREP-SP
PAINT SEE SPECS
REF.DRAWING E4, E5

REV	DATE	DESCRIPTION	
0	SEP/10/06	FOR APPROVAL	VS

RAINIER WELDING

19020 NE 84TH STREET - REDMOND, WA 98053
(425) 868-1300 FAX (425) 868-8872
STEEL AND ALUMINUM FABRICATING

PROJECT TOLT BRIDGE No 1834A
THIS DRAWING INCLUDES
FOR SNOHOMISH COUNTY OFFICIAL
DRAWN DJ DATE 07/31/2006 CHK DSC DATE 09/10/2006 DWG NUMBER 2707 - 214A 0

PRO DRAFT INC. PDI# 676 : PH:(604)589-6425
DRAWINGS PREPARED ON 3D-Xsteel File Name :- A [223.A]
Model Name: 725_102_TOLT_BRIDGE_541
Plot Date: 09/10/2006 12:20:08

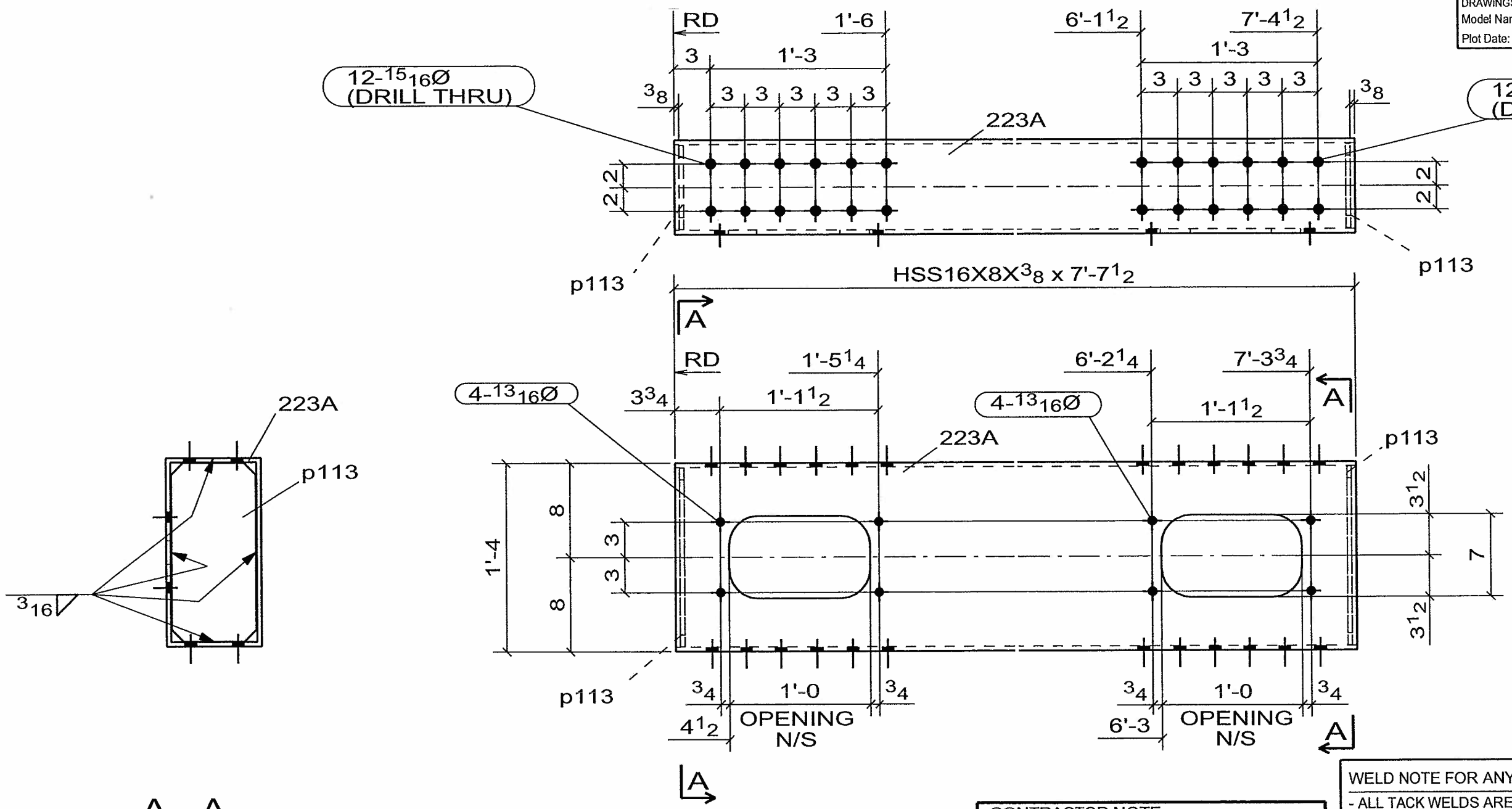

A - A

4 - V_BRACE -223A

No to SHIP	SHIP MARK	No PIECES	PIECE MARKS	DESCRIPTION	LENGTH	GRADE	REMARKS	WEIGHT	ADVANCE BILL
4	223A			V_BRACE				438	
		4	223A	HSS16X8X3/8	7'-7 1/2"	A500-GR.C		415	
		8	p113	PL3/8X7 1/8	1'-3 3/16"	AASHTO M 270 GR. 50		12	

CONTRACTOR NOTE:
THIS DRAWING IS BEING SUBMITTED FOR APPROVAL AS REQUIRED. VERIFY OR SUPPLY ALL QUANTITIES, ALL DIMENSIONS, ALL INFORMATION, & ALL CONFIGURATIONS.

PRINT RECORD

NO.	USE	DATE
	APPR.	
	APPR.	
	PURCH	
	FAB	
	FAB. OFFICE	
	Q.A.	
	DIST.	
	ERECT.	

OPEN HOLES: 15/16 Ø U/N
WELD: BRIDGE WELDING CODE: D1.5
STEEL: AS NOTED
BOLTS:
SURFACE PREP-SP:
PAINT: SEE SPECS
REF.DRAWING: E10

WELD NOTE FOR ANY ASSEMBLY REQUIRING TACK WELDS:
- ALL TACK WELDS ARE TO BE MADE IN THE WELD JOINT ONLY

REV	DATE	DESCRIPTION	
0	SEP/10/06	FOR APPROVAL	VS

☒ CONFORMS TO DESIGN CONCEPT
☐ CONFORMS TO DESIGN CONCEPT WITH REVISIONS AS SHOWN
☐ NON-CONFORMING–REVISE & RESUBMIT
THIS SHOP DRAWING HAS BEEN REVIEWED FOR GENERAL CONFORMANCE WITH DESIGN CONCEPT ONLY AND DOES NOT RELIEVE THE FABRICATOR/VENDOR OF RESPONSIBILITY FOR CONFORMANCE WITH DESIGN DRAWINGS AND SPECIFICATIONS ALL OF WHICH HAVE PRIORITY OVER THIS SHOP DRAWING.
By A. F. Date 10-13-06
LIN & ASSOCIATES, INC.

RAINIER WELDING

19020 NE 84TH STREET - REDMOND, WA 98053
(425) 868-1300 FAX (425) 868-8872
STEEL AND ALUMINUM FABRICATING

PROJECT: TOLT BRIDGE No 1834A
THIS DRAWING INCLUDES:
FOR: SNOHOMISH COUNTY OFFICIAL
DRAWN DJ DATE 07/31/2006
CHK DSC DATE 09/10/2006
DWG NUMBER 2707 - 223A
0

PRO DRAFT INC. PDI# 676 : PH:(604)589-6425
DRAWINGS PREPARED ON 3D-Xsteel File Name :- A [224.A]
Model Name: 725_102_TOLT_BRIDGE_541
Plot Date: 09/10/2006 12:20:10

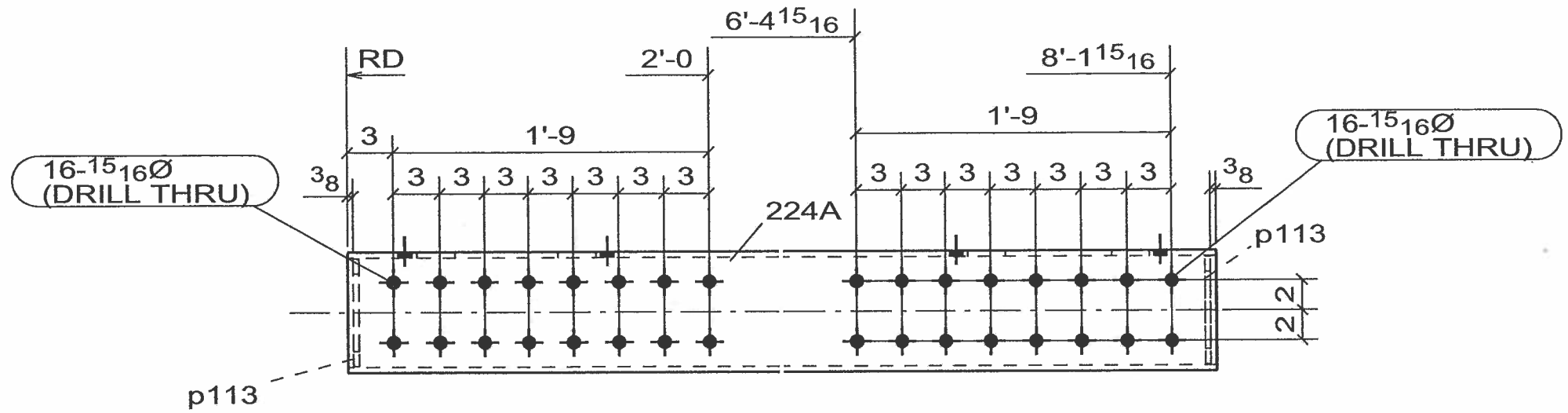

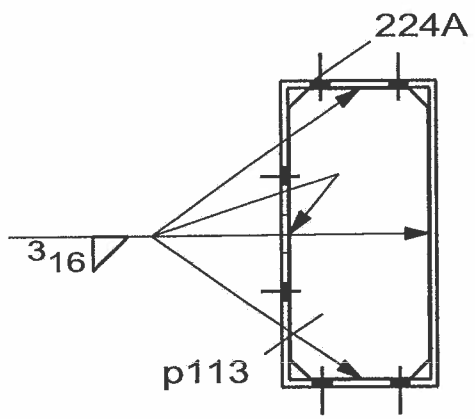

A - A

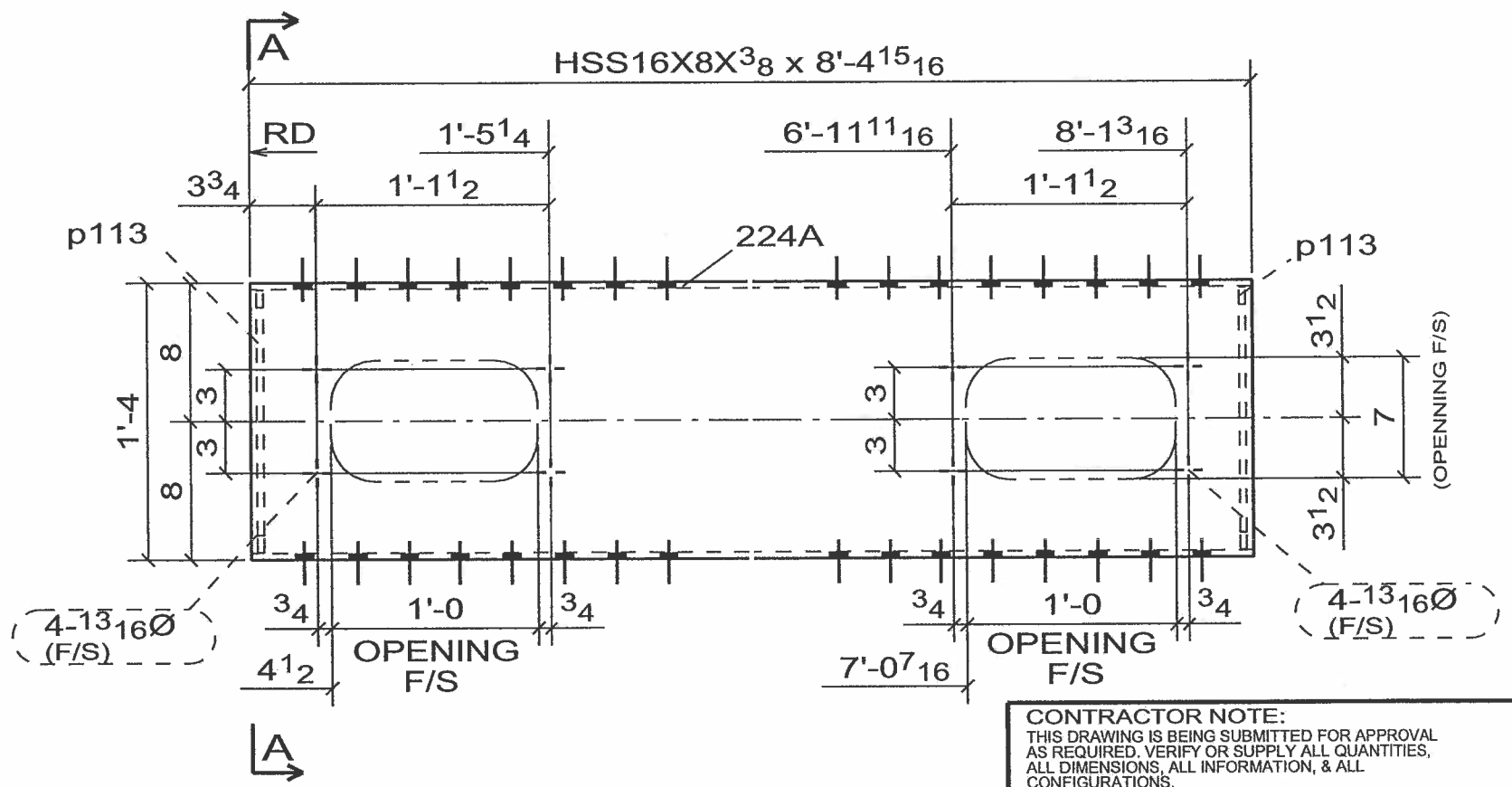

CONFORMS TO DESIGN CONCEPT
CONFORMS TO DESIGN CONCEPT WITH REVISIONS AS SHOWN
NON-CONFORMING–REVISE & RESUBMIT
THIS SHOP DRAWING HAS BEEN REVIEWED FOR GENERAL CONFORMANCE WITH DESIGN CONCEPT ONLY AND DOES NOT RELIEVE THE FABRICATOR/VENDOR OF RESPONSIBLITY FOR CONFORMANCE WITH DESIGN DRAWINGS AND SPECIFICATIONS ALL OF WHICH HAVE PRIORITY OVER THIS SHOP DRAWING.
By A.F. Date 10-13-06
LIN & ASSOCIATES, INC.

WELD NOTE FOR ANY ASSEMBLY REQUIRING TACK WELDS:
- ALL TACK WELDS ARE TO BE MADE IN THE WELD JOINT ONLY

CONTRACTOR NOTE:
THIS DRAWING IS BEING SUBMITTED FOR APPROVAL AS REQUIRED. VERIFY OR SUPPLY ALL QUANTITIES, ALL DIMENSIONS, ALL INFORMATION, & ALL CONFIGURATIONS.

PRINT RECORD

NO.	USE	DATE
	APPR.	
	APPR.	
	PURCH	
	FAB	
	FAB. OFFICE	
	Q.A.	
	DIST.	
	ERECT.	

OPEN HOLES: 15/16 Ø U/N
WELD: BRIDGE WELDING CODE: D1.5
STEEL: AS NOTED
BOLTS:
SURFACE PREP-SP:
PAINT: SEE SPECS
REF.DRAWING: E10

REV	DATE	DESCRIPTION	
0	SEP/10/06	FOR APPROVAL	VS

RAINIER WELDING

19020 NE 84TH STREET - REDMOND, WA 98053
(425) 868-1300 FAX (425) 868-8872
STEEL AND ALUMINUM FABRICATING

PROJECT: TOLT BRIDGE No 1834A
THIS DRAWING INCLUDES:
FOR: SNOHOMISH COUNTY OFFICIAL
DRAWN DJ DATE 07/31/2006
CHK DSC DATE 09/10/2006
DWG NUMBER 2707 - 224A 0

4 - V_BRACE -224A

No to SHIP	SHIP MARK	No PIECES	PIECE MARKS	DESCRIPTION	LENGTH	GRADE	REMARKS	WEIGHT	ADVANCE BILL
4	224A			V_BRACE				481	
		4	224A	HSS16X8X3/8	8'-4 15/16"	A500-GR.C		458	
		8	p113	PL3/8X7 1/8	1'-3 3/16"	AASHTO M 270 GR. 50		12	

PRO DRAFT INC. PDI# 676 : PH:(604)589-6425
DRAWINGS PREPARED ON 3D-Xsteel File Name :- A [225.A]
Model Name: 725_102_TOLT_BRIDGE_541
Plot Date: 09/10/2006 12:20:11

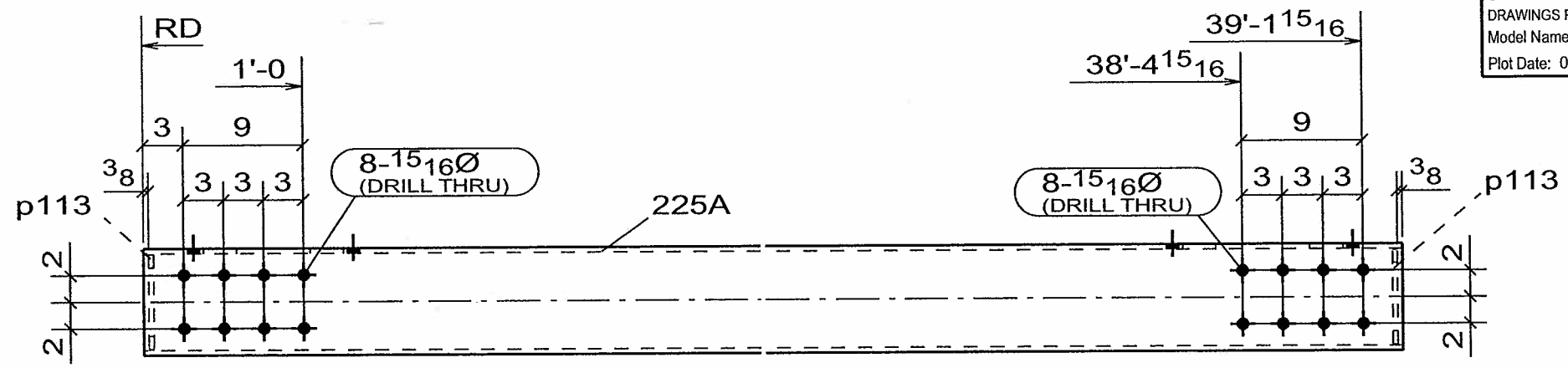

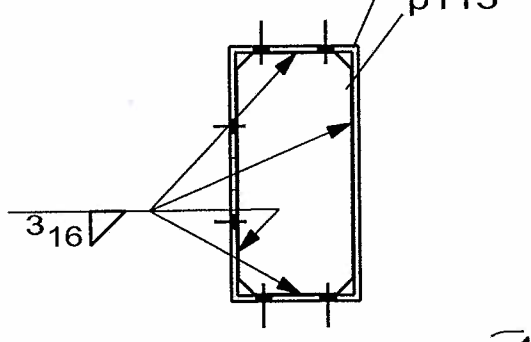

A - A

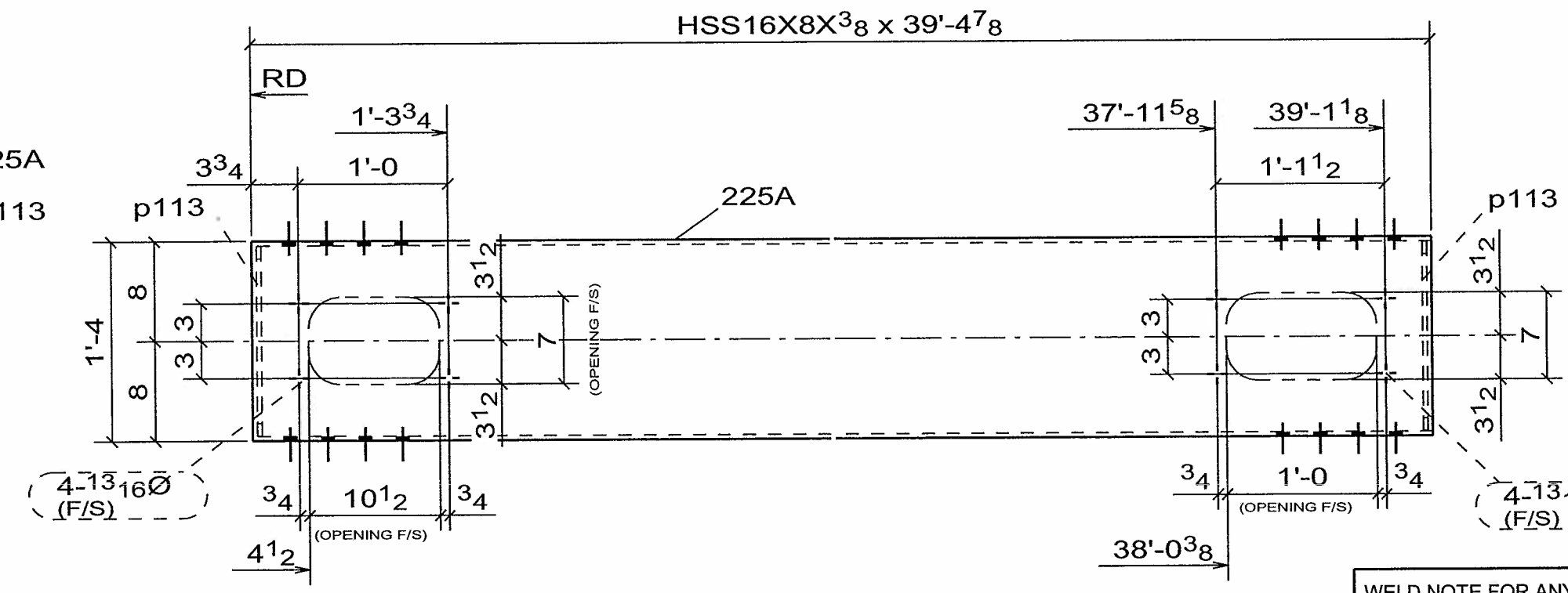

WELD NOTE FOR ANY ASSEMBLY REQUIRING TACK WELDS:
- ALL TACK WELDS ARE TO BE MADE IN THE WELD JOINT ONLY

CONTRACTOR NOTE:
THIS DRAWING IS BEING SUBMITTED FOR APPROVAL AS REQUIRED. VERIFY OR SUPPLY ALL QUANTITIES, ALL DIMENSIONS, ALL INFORMATION, & ALL CONFIGURATIONS.

PRINT RECORD

NO.	USE	DATE
	APPR.	
	APPR.	
	PURCH	
	FAB	
	FAB. OFFICE	
	Q.A.	
	DIST	
	ERECT.	

OPEN HOLES: 15/16 Ø U/N
WELD: BRIDGE WELDING CODE: D1.5
STEEL: AS NOTED
BOLTS:
SURFACE PREP-SP:
PAINT: SEE SPECS
REF.DRAWING: E6, E7, E8, E9

☒ CONFORMS TO DESIGN CONCEPT
☐ CONFORMS TO DESIGN CONCEPT WITH REVISIONS AS SHOWN
☐ NON-CONFORMING–REVISE & RESUBMIT
THIS SHOP DRAWING HAS BEEN REVIEWED FOR GENERAL CONFORMANCE WITH DESIGN CONCEPT ONLY AND DOES NOT RELIEVE THE FABRICATOR/VENDOR OF RESPONSIBILITY FOR CONFORMANCE WITH DESIGN DRAWINGS AND SPECIFICATIONS ALL OF WHICH HAVE PRIORITY OVER THIS SHOP DRAWING.
By A.F. Date 10-13-06

I.IN & ASSOCIATES, INC.

REV	DATE	DESCRIPTION	
0	SEP/10/06	FOR APPROVAL	VS

RAINIER WELDING

19020 NE 84TH STREET - REDMOND, WA 98053
(425) 868-1300 FAX (425) 868-8872
STEEL AND ALUMINUM FABRICATING

PROJECT: TOLT BRIDGE No 1834A
THIS DRAWING INCLUDES:
FOR: SNOHOMISH COUNTY OFFICIAL
DRAWN: DJ DATE: 07/31/2006 CHK: DSC DATE: 09/10/2006 DWG NUMBER: 2707 - 225A 0

4 - POST - 225A

No to SHIP	SHIP MARK	No PIECES	PIECE MARKS	DESCRIPTION	LENGTH	GRADE	REMARKS	WEIGHT	ADVANCE BILL
4	225A			POST				2169	
		4	225A	HSS16X8X3/8	39'-4 7/8"	A500-GR.C	FCM/V	2146	
		8	p113	PL3/8X7 1/8	1'-3 3/16"	AASHTO M 270 GR. 50		12	

PRO DRAFT INC. PDI# 676 PH:(604)589-6425
DRAWINGS PREPARED ON 3D-Xsteel File Name :- A [226.A]
Model Name: 725_102_TOLT_BRIDGE_541
Plot Date: 09/10/2006 12:20:12

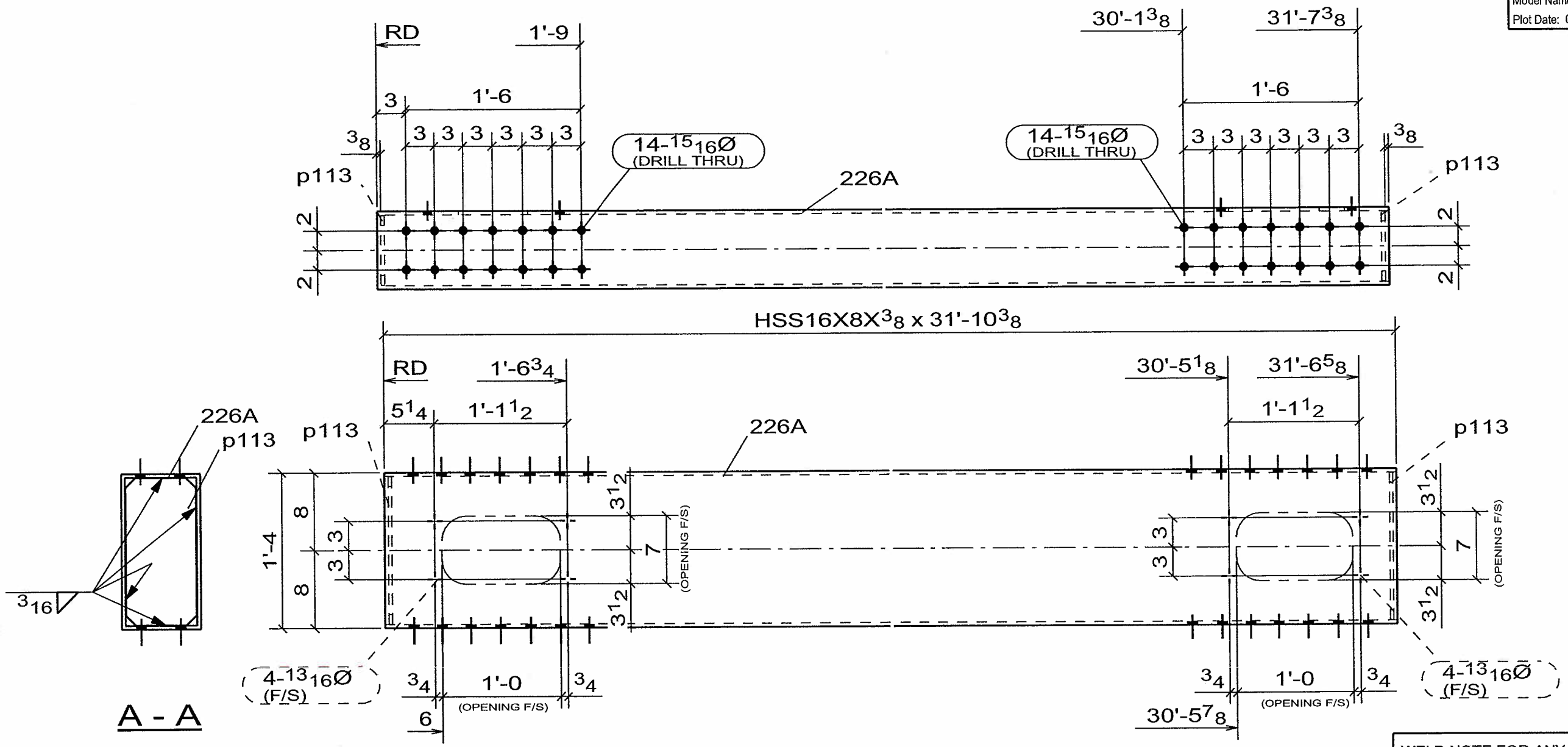

CONFORMS TO DESIGN CONCEPT
CONFORMS TO DESIGN CONCEPT WITH REVISIONS AS SHOWN
NON-CONFORMING–REVISE & RESUBMIT
THIS SHOP DRAWING HAS BEEN REVIEWED FOR GENERAL CONFORMANCE WITH DESIGN CONCEPT ONLY AND DOES NOT RELIEVE THE FABRICATOR/VENDOR OF RESPONSIBILITY FOR CONFORMANCE WITH DESIGN DRAWINGS AND SPECIFICATIONS ALL OF WHICH HAVE PRIORITY OVER THIS SHOP DRAWING.
By A.F. Date 10-13-06
L.IN & ASSOCIATES, INC.

WELD NOTE FOR ANY ASSEMBLY REQUIRING TACK WELDS:
- ALL TACK WELDS ARE TO BE MADE IN THE WELD JOINT ONLY

4 - POST -226A

No to SHIP	SHIP MARK	No PIECES	PIECE MARKS	DESCRIPTION	LENGTH	GRADE	REMARKS	WEIGHT	ADVANCE BILL
4	226A			POST				1758	
		4	226A	HSS16X8X3/8	31'-10 3/8"	A500-GR.C	FCM/V	1735	
		8	p113	PL3/8X7 1/8	1'-3 3/16"	AASHTO M 270 GR. 50		12	

CONTRACTOR NOTE:
THIS DRAWING IS BEING SUBMITTED FOR APPROVAL AS REQUIRED. VERIFY OR SUPPLY ALL QUANTITIES, ALL DIMENSIONS, ALL INFORMATION, & ALL CONFIGURATIONS.

PRINT RECORD

NO.	USE	DATE
	APPR.	
	APPR.	
	PURCH	
	FAB	
	FAB. OFFICE	
	Q.A.	
	DIST.	
	ERECT.	

OPEN HOLES: 15/16 Ø U/N
WELD: BRIDGE WELDING CODE: D1.5
STEEL: AS NOTED
BOLTS:
SURFACE PREP-SP:
PAINT: SEE SPECS
REF.DRAWING: E6, E7, E8, E9

REV	DATE	DESCRIPTION	
0	SEP/10/06	FOR APPROVAL	VS

RAINIER WELDING

19020 NE 84TH STREET - REDMOND, WA 98053
(425) 868-1300 FAX (425) 868-8872
STEEL AND ALUMINUM FABRICATING

PROJECT: TOLT BRIDGE No 1834A
THIS DRAWING INCLUDES:
FOR: SNOHOMISH COUNTY OFFICIAL
DRAWN DJ DATE 07/31/2006 CHK DSC DATE 09/10/2006 DWG NUMBER 2707 - 226A 0

☒ CONFORMS TO DESIGN CONCEPT
☐ ~~CONFORMS TO DESIGN CONCEPT WITH~~ REVISIONS AS SHOWN
☐ NON-CONFORMING–REVISE & RESUBMIT

THIS SHOP DRAWING HAS BEEN REVIEWED FOR GENERAL CONFORMANCE WITH DESIGN CONCEPT ONLY AND DOES NOT RELIEVE THE FABRICATOR/VENDOR OF RESPONSIBLITY FOR CONFORMANCE WITH DESIGN DRAWINGS AND SPECIFICATIONS ALL OF WHICH HAVE PRIORITY OVER THIS SHOP DRAWING.

By A.F. Date 10-13-06

LIN & ASSOCIATES, INC.

PRO DRAFT INC. PDI# 676 : PH:(604)589-6425
DRAWINGS PREPARED ON 3D-Xsteel File Name :- A [227.A]
Model Name: 725_102_TOLT_BRIDGE_541
Plot Date: 09/10/2006 12:20:14

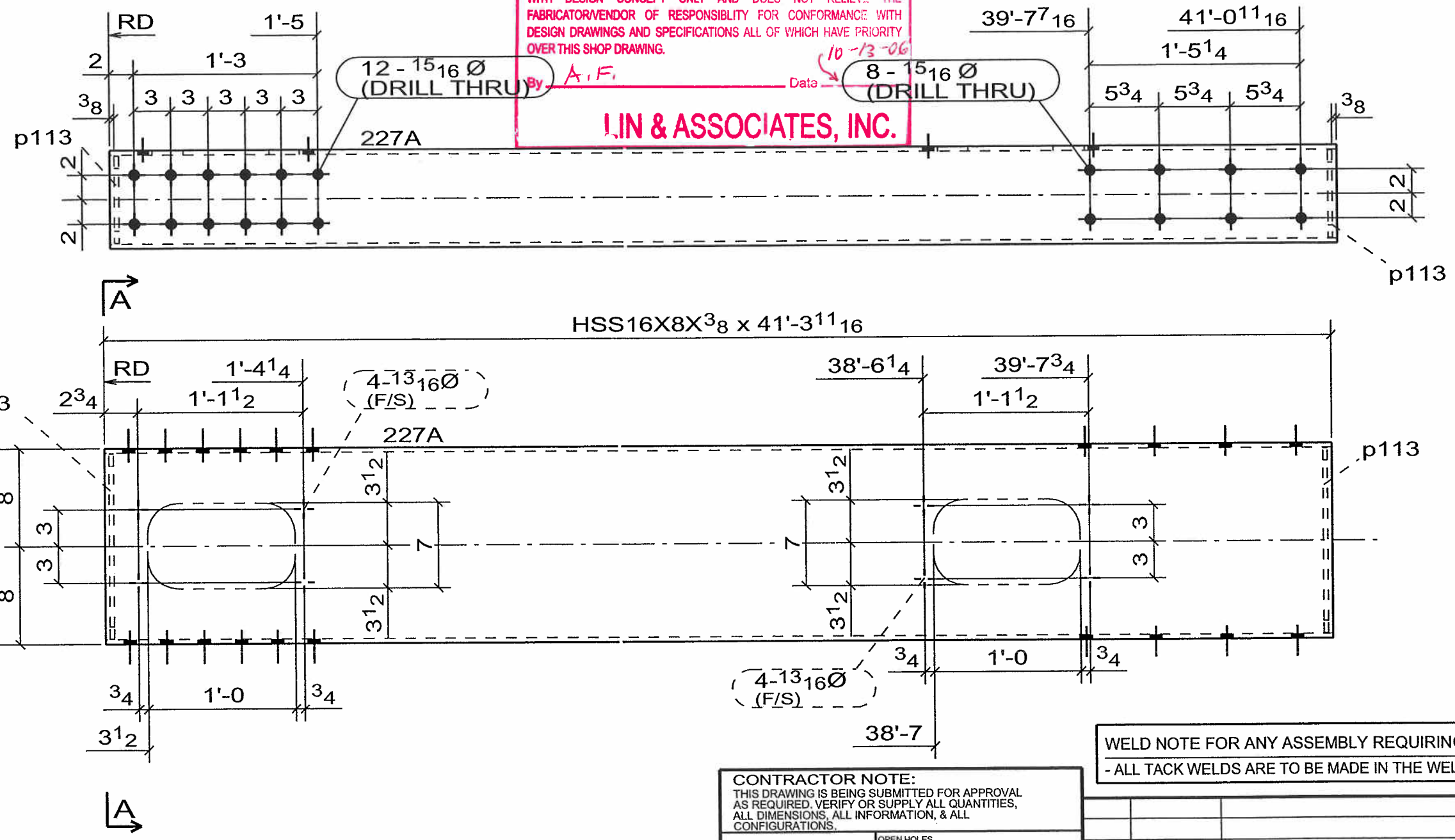

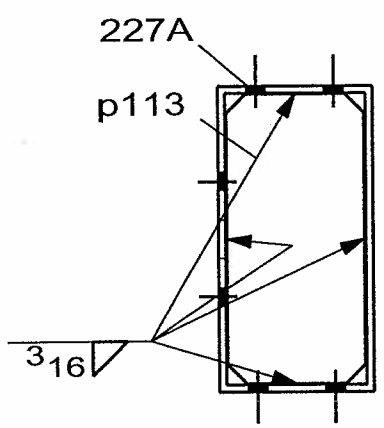

A - A

WELD NOTE FOR ANY ASSEMBLY REQUIRING TACK WELDS:
- ALL TACK WELDS ARE TO BE MADE IN THE WELD JOINT ONLY

CONTRACTOR NOTE:
THIS DRAWING IS BEING SUBMITTED FOR APPROVAL AS REQUIRED. VERIFY OR SUPPLY ALL QUANTITIES, ALL DIMENSIONS, ALL INFORMATION, & ALL CONFIGURATIONS.

PRINT RECORD

NO.	USE	DATE
	APPR.	
	APPR.	
	PURCH	
	FAB	
	FAB. OFFICE	
	Q.A.	
	DIST.	
	ERECT.	

OPEN HOLES: 15/16 Ø U/N
WELD: BRIDGE WELDING CODE: D1.5
STEEL: AS NOTED
BOLTS:
SURFACE PREP-SP:
PAINT: SEE SPECS
REF.DRAWING: E6, E7, E8, E9

REV	DATE	DESCRIPTION	
0	SEP/10/06	FOR APPROVAL	VS

RAINIER WELDING

19020 NE 84TH STREET - REDMOND, WA 98053
(425) 868-1300 FAX (425) 868-8872
STEEL AND ALUMINUM FABRICATING

PROJECT: TOLT BRIDGE No 1834A
THIS DRAWING INCLUDES:
FOR: SNOHOMISH COUNTY OFFICIAL

DRAWN DJ DATE 07/31/2006 | CHK DSC DATE 09/10/2006 | DWG NUMBER 2707 - 227A △0

4 - POST -227A

No to SHIP	SHIP MARK	No PIECES	PIECE MARKS	DESCRIPTION	LENGTH	GRADE	REMARKS	WEIGHT	ADVANCE BILL
4	227A			POST				2272	
		4	227A	HSS16X8X3/8	41'-3 11/16"	A500-GR.C	FCM/V	2249	
		8	p113	PL3/8X7 1/8	1'-3 3/16"	AASHTO M 270 GR. 50		12	

PRO DRAFT INC. PDI# 676 PH:(604)589-6425
DRAWINGS PREPARED ON 3D-Xsteel File Name :- A [228.A]
Model Name: 725_102_TOLT_BRIDGE_541
Plot Date: 09/10/2006 12:20:15

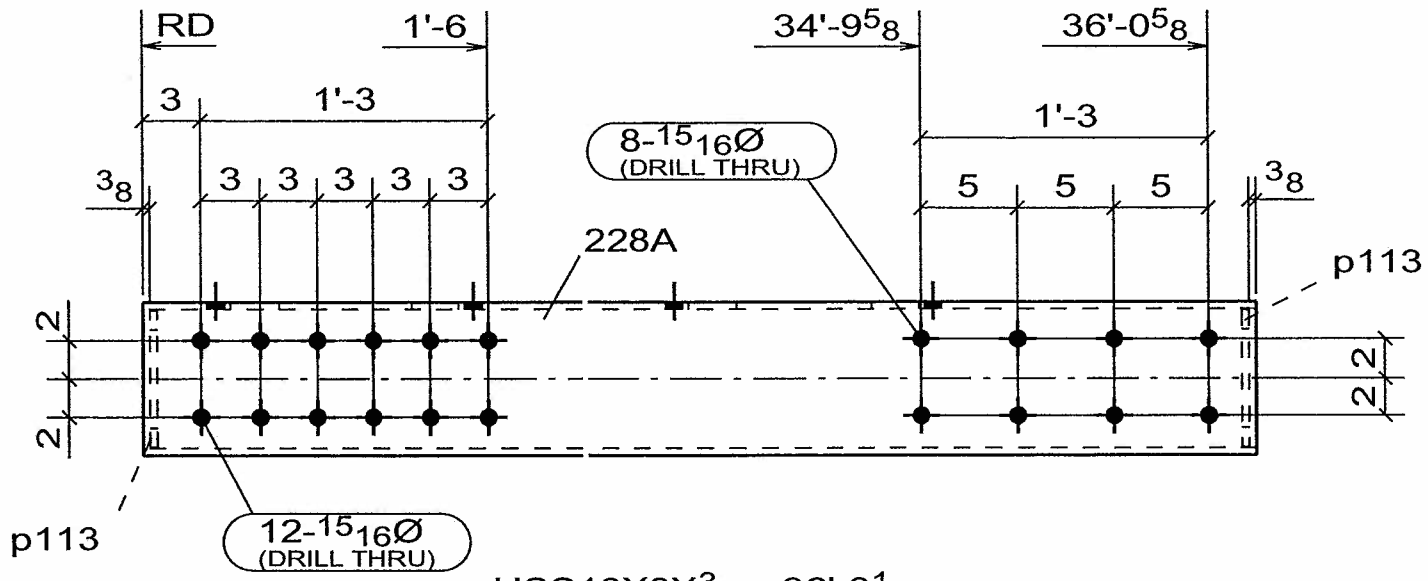

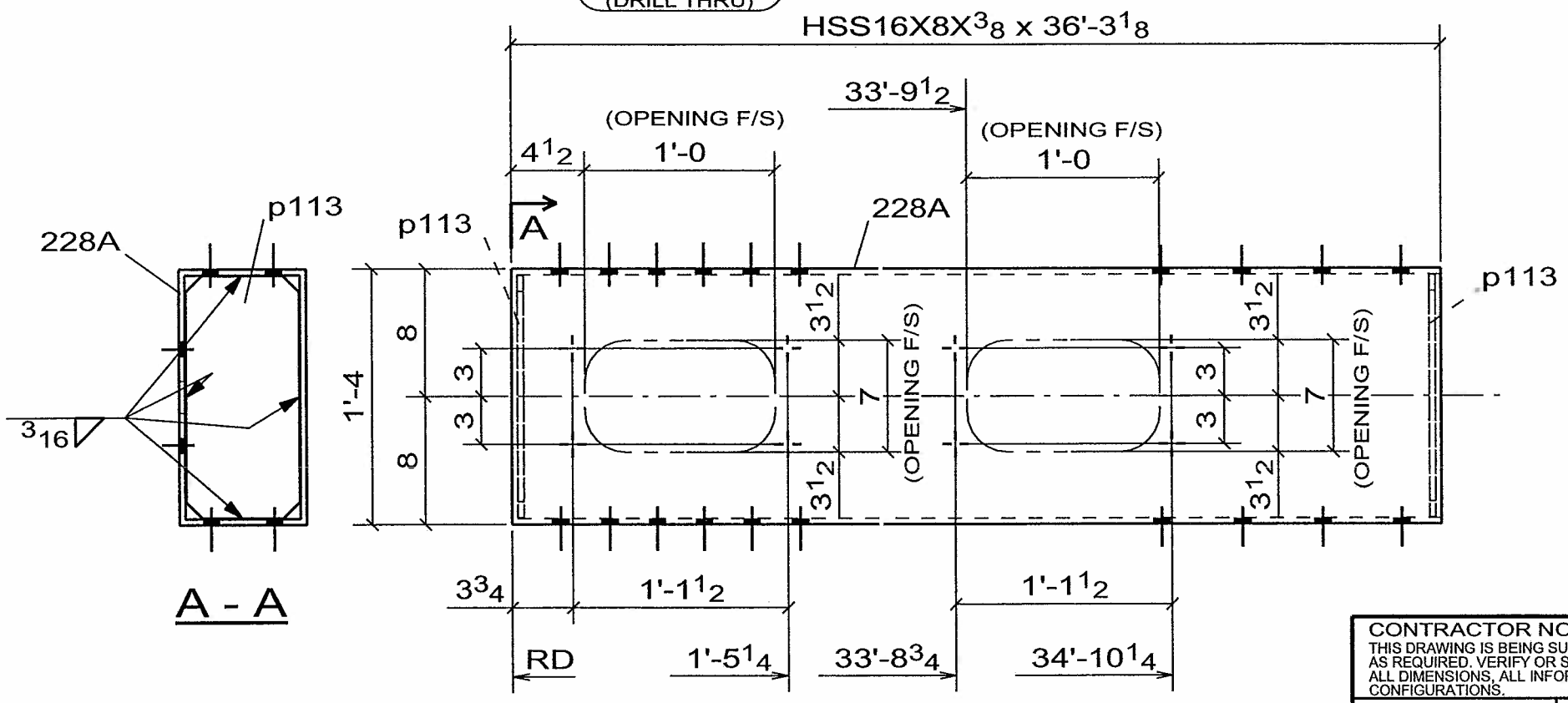

4 - POST - 228A

No to SHIP	SHIP MARK	No PIECES	PIECE MARKS	DESCRIPTION	LENGTH	GRADE	REMARKS	WEIGHT	ADVANCE BILL
4	228A			POST				1997	
		4	228A	HSS16X8X3/8	36'-3 1/8"	A500-GR.C	FCM/V	1974	
		8	p113	PL3/8X7 1/8	1'-3 3/16"	AASHTO M 270 GR. 50		12	

☒ CONFORMS TO DESIGN CONCEPT
☐ CONFORMS TO DESIGN CONCEPT WITH REVISIONS AS SHOWN
☐ NON-CONFORMING–REVISE & RESUBMIT

THIS SHOP DRAWING HAS BEEN REVIEWED FOR GENERAL CONFORMANCE WITH DESIGN CONCEPT ONLY AND DOES NOT RELIEVE THE FABRICATOR/VENDOR OF RESPONSIBLITY FOR CONFORMANCE WITH DESIGN DRAWINGS AND SPECIFICATIONS ALL OF WHICH HAVE PRIORITY OVER THIS SHOP DRAWING.

By A.F. Date 10-13-06

LIN & ASSOCIATES, INC.

WELD NOTE FOR ANY ASSEMBLY REQUIRING TACK WELDS:
- ALL TACK WELDS ARE TO BE MADE IN THE WELD JOINT ONLY

CONTRACTOR NOTE:
THIS DRAWING IS BEING SUBMITTED FOR APPROVAL AS REQUIRED. VERIFY OR SUPPLY ALL QUANTITIES, ALL DIMENSIONS, ALL INFORMATION, & ALL CONFIGURATIONS.

PRINT RECORD			
NO.	USE	DATE	OPEN HOLES 15/16 Ø U/N
	APPR.		WELD BRIDGE WELDING CODE: D1.5
	APPR.		STEEL AS NOTED
	PURCH		BOLTS
	FAB		SURFACE PREP-SP
	FAB. OFFICE		PAINT SEE SPECS
	Q.A.		REF.DRAWING E6, E7, E8, E9
	DIST.		
	ERECT.		

REV	DATE	DESCRIPTION	
0	SEP/10/06	FOR APPROVAL	VS

RAINIER WELDING

19020 NE 84TH STREET - REDMOND, WA 98053
(425) 868-1300 FAX (425) 868-8872
STEEL AND ALUMINUM FABRICATING

PROJECT TOLT BRIDGE No 1834A
THIS DRAWING INCLUDES
FOR SNOHOMISH COUNTY OFFICIAL

DRAWN DJ DATE 07/31/2006 | CHK DSC DATE 09/10/2006 | DWG NUMBER 2707 - 228A △0

PRO DRAFT INC. PDI# 676 PH:(604)589-6425
DRAWINGS PREPARED ON 3D-Xsteel File Name :- A [229.A]
Model Name: 725_102_TOLT_BRIDGE_541
Plot Date: 09/10/2006 12:20:16

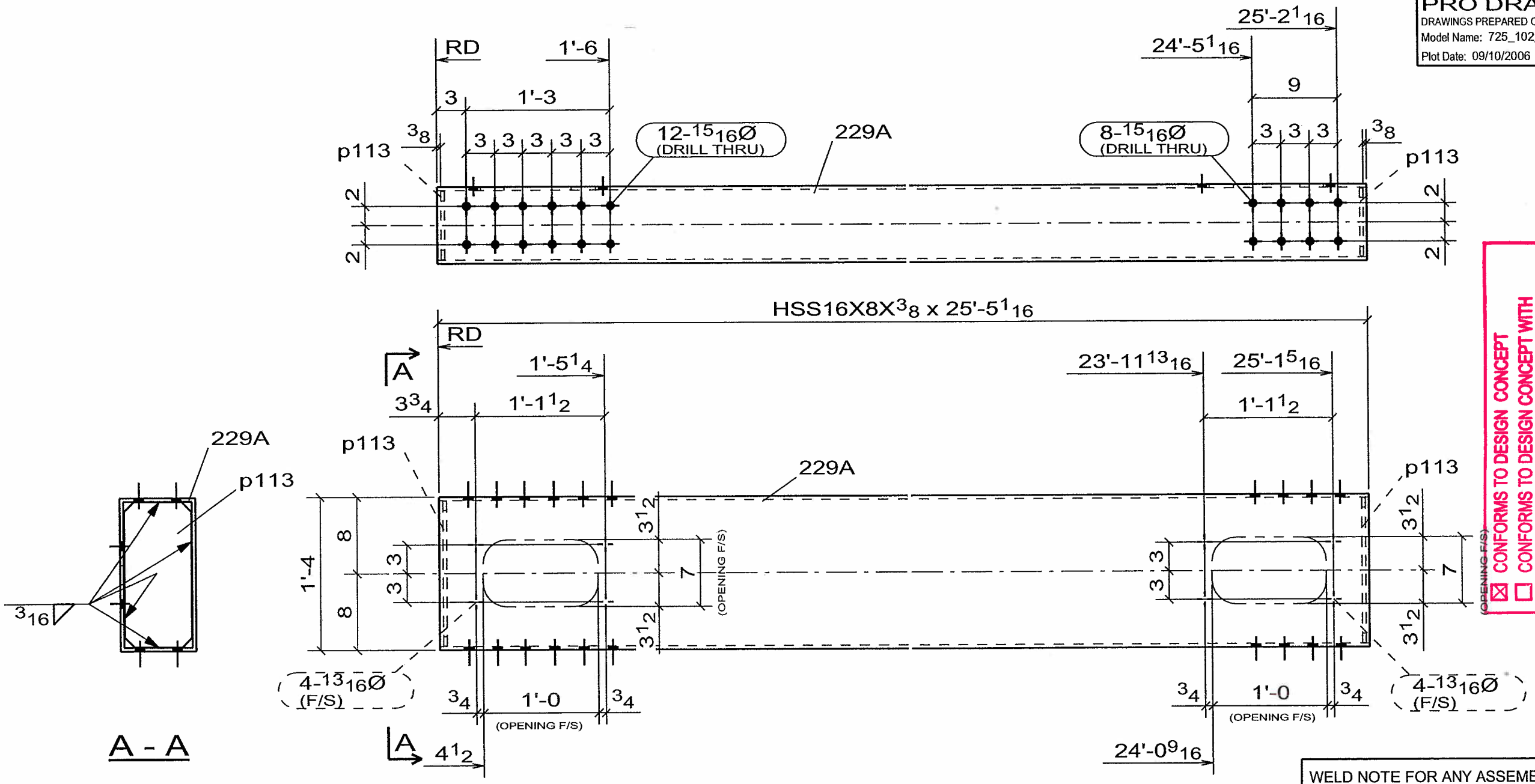

CONFORMS TO DESIGN CONCEPT
☒ CONFORMS TO DESIGN CONCEPT WITH REVISIONS AS SHOWN
☐ NON-CONFORMING–REVISE & RESUBMIT
THIS SHOP DRAWING HAS BEEN REVIEWED FOR GENERAL CONFORMANCE WITH DESIGN CONCEPT ONLY AND DOES NOT RELIEVE THE FABRICATOR/VENDOR OF RESPONSIBILITY FOR CONFORMANCE WITH DESIGN DRAWINGS AND SPECIFICATIONS ALL OF WHICH HAVE PRIORITY OVER THIS SHOP DRAWING.
By A.F. Date 10-13-06
LIN & ASSOCIATES, INC.

WELD NOTE FOR ANY ASSEMBLY REQUIRING TACK WELDS:
- ALL TACK WELDS ARE TO BE MADE IN THE WELD JOINT ONLY

CONTRACTOR NOTE:
THIS DRAWING IS BEING SUBMITTED FOR APPROVAL AS REQUIRED. VERIFY OR SUPPLY ALL QUANTITIES, ALL DIMENSIONS, ALL INFORMATION, & ALL CONFIGURATIONS.

PRINT RECORD

NO.	USE	DATE
	APPR.	
	APPR.	
	PURCH	
	FAB	
	FAB. OFFICE	
	Q.A.	
	DIST.	
	ERECT.	

OPEN HOLES: 15/16 Ø U/N
WELD: BRIDGE WELDING CODE: D1.5
STEEL: AS NOTED
BOLTS:
SURFACE PREP-SP:
PAINT: SEE SPECS
REF.DRAWING: E7, E8

REV	DATE	DESCRIPTION	VS
0	SEP/10/06	FOR APPROVAL	

RAINIER WELDING

19020 NE 84TH STREET - REDMOND, WA 98053
(425) 868-1300 FAX (425) 868-8872
STEEL AND ALUMINUM FABRICATING

PROJECT: TOLT BRIDGE No 1834A
THIS DRAWING INCLUDES:
FOR: SNOHOMISH COUNTY OFFICIAL
DRAWN DJ DATE 07/31/2006 CHK DSC DATE 09/10/2006 DWG NUMBER 2707 - 229A 0

2 - POST -229A

No to SHIP	SHIP MARK	No PIECES	PIECE MARKS	DESCRIPTION	LENGTH	GRADE	REMARKS	WEIGHT	ADVANCE BILL
2	229A			POST				1407	
		2	229A	HSS16X8X3/8	25'-5 1/16"	A500-GR.C	FCM/V	1384	
		4	p113	PL3/8X7 1/8	1'-3 3/16"	AASHTO M 270 GR. 50		12	

PRO DRAFT INC. PDI# 676 : PH:(604)589-6425
DRAWINGS PREPARED ON 3D-Xsteel File Name :- A [230.A]
Model Name: 725_102_TOLT_BRIDGE_541
Plot Date: 09/10/2006 12:20:18

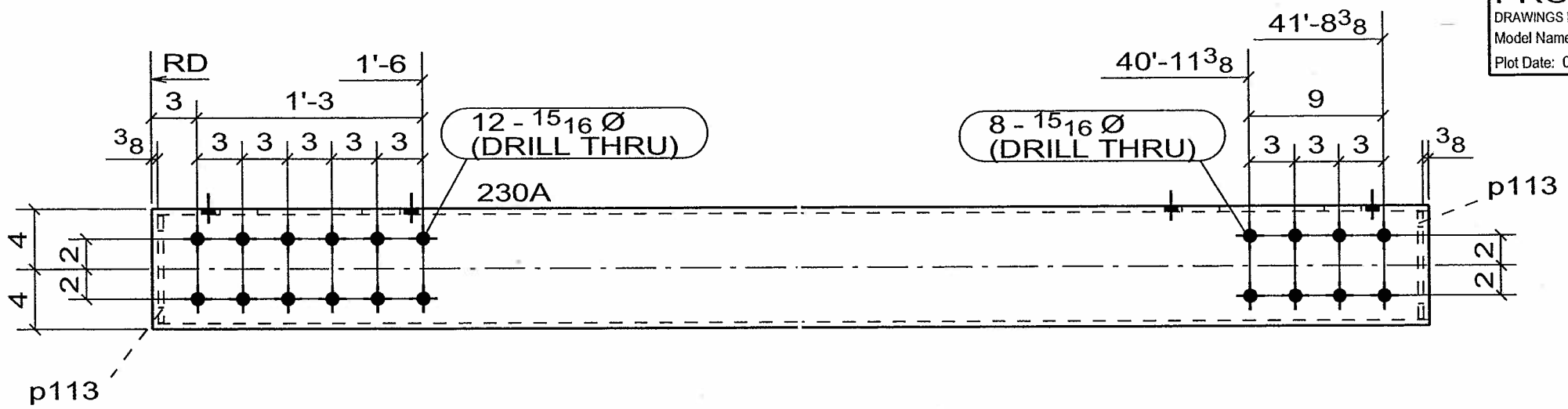

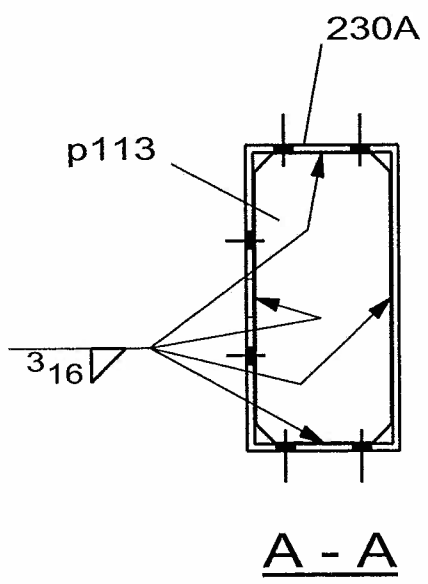

A - A

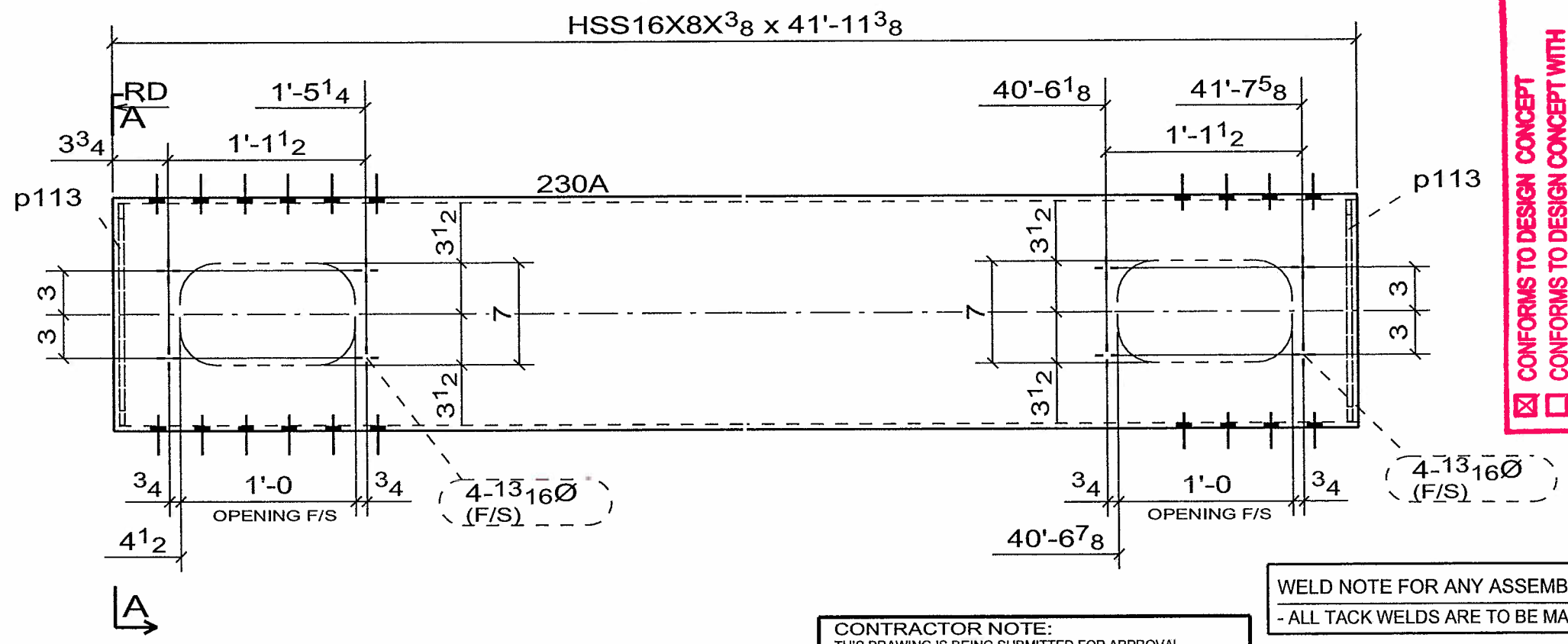

☒ CONFORMS TO DESIGN CONCEPT
☐ CONFORMS TO DESIGN CONCEPT WITH REVISIONS AS SHOWN
☐ NON-CONFORMING–REVISE & RESUBMIT
THIS SHOP DRAWING HAS BEEN REVIEWED FOR GENERAL CONFORMANCE WITH DESIGN CONCEPT ONLY AND DOES NOT RELIEVE THE FABRICATOR/VENDOR OF RESPONSIBILITY FOR CONFORMANCE WITH DESIGN DRAWINGS AND SPECIFICATIONS ALL OF WHICH HAVE PRIORITY OVER THIS SHOP DRAWING.
By A.F. Date 10-13-06
LIN & ASSOCIATES, INC.

WELD NOTE FOR ANY ASSEMBLY REQUIRING TACK WELDS:
- ALL TACK WELDS ARE TO BE MADE IN THE WELD JOINT ONLY

2 - POST -230A

No to SHIP	SHIP MARK	No PIECES	PIECE MARKS	DESCRIPTION	LENGTH	GRADE	REMARKS	WEIGHT	ADVANCE BILL
2	230A			POST				2307	
		2	230A	HSS16X8X3/8	41'-11 3/8"	A500-GR.C	FCM/V	2284	
		4	p113	PL3/8X7 1/8	1'-3 3/16"	AASHTO M 270 GR. 50		12	

CONTRACTOR NOTE:
THIS DRAWING IS BEING SUBMITTED FOR APPROVAL AS REQUIRED. VERIFY OR SUPPLY ALL QUANTITIES, ALL DIMENSIONS, ALL INFORMATION, & ALL CONFIGURATIONS.

PRINT RECORD

NO.	USE	DATE
	APPR.	
	APPR.	
	PURCH	
	FAB	
	FAB. OFFICE	
	Q.A.	
	DIST.	
	ERECT.	

OPEN HOLES 15/16 Ø U/N
WELD BRIDGE WELDING CODE: D1.5
STEEL AS NOTED
BOLTS
SURFACE PREP-SP
PAINT SEE SPECS
REF.DRAWING E6, E8

REV	DATE	DESCRIPTION	
0	SEP/10/06	FOR APPROVAL	VS

RAINIER WELDING

19020 NE 84TH STREET - REDMOND, WA 98053
(425) 868-1300 FAX (425) 868-8872
STEEL AND ALUMINUM FABRICATING

PROJECT TOLT BRIDGE No 1834A
THIS DRAWING INCLUDES
FOR SNOHOMISH COUNTY OFFICIAL

DRAWN DJ DATE 07/31/2006 | CHK DSC DATE 09/10/2006 | DWG NUMBER 2707 - 230A | 0

PRO DRAFT INC. PDI# 676 : PH:(604)589-6425
DRAWINGS PREPARED ON 3D-Xsteel File Name :- A [231.A]
Model Name: 725_102_TOLT_BRIDGE_541
Plot Date: 09/10/2006 12:20:19

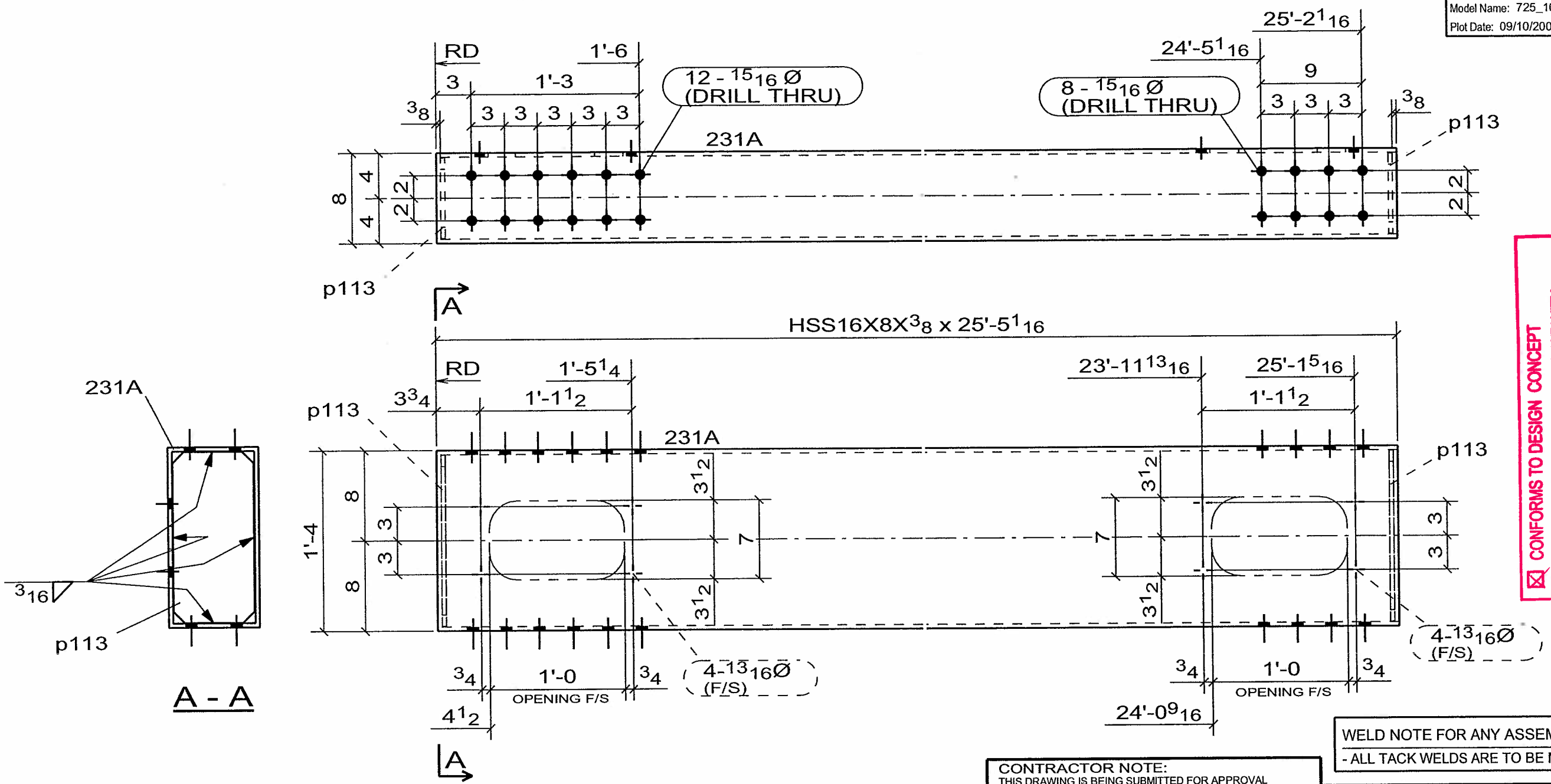

CONFORMS TO DESIGN CONCEPT
☐ CONFORMS TO DESIGN CONCEPT WITH REVISIONS AS SHOWN
☐ NON-CONFORMING-REVISE & RESUBMIT
THIS SHOP DRAWING HAS BEEN REVIEWED FOR GENERAL CONFORMANCE WITH DESIGN CONCEPT ONLY AND DOES NOT RELIEVE THE FABRICATOR/VENDOR OF RESPONSIBILITY FOR CONFORMANCE WITH DESIGN DRAWINGS AND SPECIFICATIONS ALL OF WHICH HAVE PRIORITY OVER THIS SHOP DRAWING.
By A.F. Date 10-12-06
LIN & ASSOCIATES, INC.

WELD NOTE FOR ANY ASSEMBLY REQUIRING TACK WELDS:
- ALL TACK WELDS ARE TO BE MADE IN THE WELD JOINT ONLY

CONTRACTOR NOTE:
THIS DRAWING IS BEING SUBMITTED FOR APPROVAL AS REQUIRED. VERIFY OR SUPPLY ALL QUANTITIES, ALL DIMENSIONS, ALL INFORMATION, & ALL CONFIGURATIONS.

PRINT RECORD

NO.	USE	DATE
	APPR.	
	APPR.	
	PURCH	
	FAB	
	FAB. OFFICE	
	Q.A.	
	DIST.	
	ERECT.	

OPEN HOLES: 15/16 Ø U/N
WELD: BRIDGE WELDING CODE: D1.5
STEEL: AS NOTED
BOLTS:
SURFACE PREP-SP:
PAINT: SEE SPECS
REF.DRAWING: E6, E9

REV	DATE	DESCRIPTION	
0	SEP/10/06	FOR APPROVAL	VS

RAINIER WELDING

19020 NE 84TH STREET - REDMOND, WA 98053
(425) 868-1300 FAX (425) 868-8872
STEEL AND ALUMINUM FABRICATING

PROJECT: TOLT BRIDGE No 1834A
THIS DRAWING INCLUDES:
FOR: SNOHOMISH COUNTY OFFICIAL
DRAWN DJ DATE 07/31/2006 | CHK DSC DATE 09/10/2006 | DWG NUMBER 2707 - 231A | 0

2 - POST -231A

No to SHIP	SHIP MARK	No PIECES	PIECE MARKS	DESCRIPTION	LENGTH	GRADE	REMARKS	WEIGHT	ADVANCE BILL
2	231A			POST				1407	
		2	231A	HSS16X8X3/8	25'-5 1/16"	A500-GR.C	FCM/V	1384	
		4	p113	PL3/8X7 1/8	1'-3 3/16"	AASHTO M 270 GR. 50		12	

☒ CONFORMS TO DESIGN CONCEPT
☐ CONFORMS TO DESIGN CONCEPT WITH REVISIONS AS SHOWN
☐ NON-CONFORMING–REVISE & RESUBMIT

THIS SHOP DRAWING HAS BEEN REVIEWED FOR GENERAL CONFORMANCE WITH DESIGN CONCEPT ONLY AND DOES NOT RELIEVE THE FABRICATOR/VENDOR OF RESPONSIBLITY FOR CONFORMANCE WITH DESIGN DRAWINGS AND SPECIFICATIONS ALL OF WHICH HAVE PRIORITY OVER THIS SHOP DRAWING.

By A. F. Date 10-13-06

LIN & ASSOCIATES, INC.

PRO DRAFT INC. PDI# 676 : PH:(604)589-6425
DRAWINGS PREPARED ON 3D-Xsteel File Name :- A [232.A]
Model Name: 725_102_TOLT_BRIDGE_541
Plot Date: 09/10/2006 12:20:20

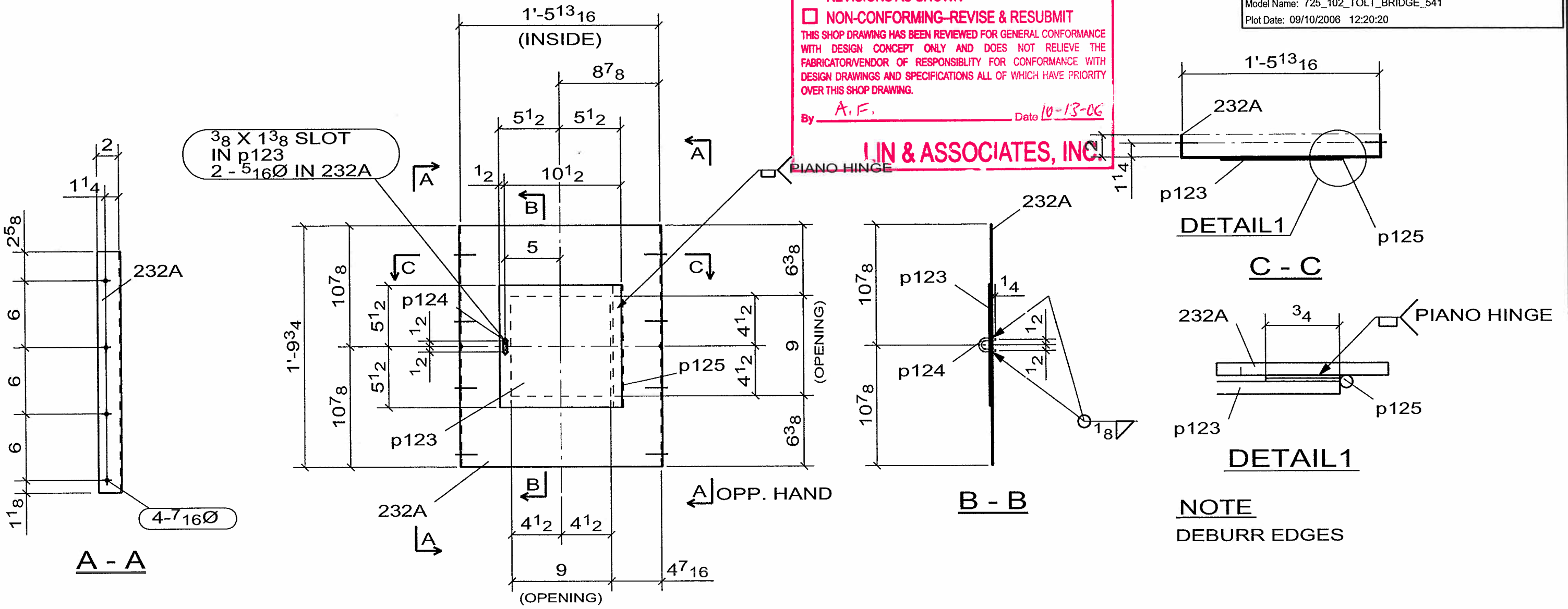

NOTE
DEBURR EDGES

WELD NOTE FOR ANY ASSEMBLY REQUIRING TACK WELDS:
- ALL TACK WELDS ARE TO BE MADE IN THE WELD JOINT ONLY

2 - SS_COVER - 232A

No to SHIP	SHIP MARK	No PIECES	PIECE MARKS	DESCRIPTION	LENGTH	GRADE	REMARKS	WEIGHT	ADVANCE BILL
2	232A			SS_COVER		BRUSHED FINISH		19	
		2	232A	PL[redacted]21 3/4 X 11 GA.	1'-9 13/16"	A304 BEND		14	
		2	p123	FB[redacted]11 X 11 GA.	0'-11"	A304		4	
		2	p124	ROD1/4	0'-3 3/8"	A304 BEND		0	
		2	p125	[redacted] SS PIANO HINGE	0'-11"	A304 W / HOLES		0	
				[redacted]				0	

CONTRACTOR NOTE:
THIS DRAWING IS BEING SUBMITTED FOR APPROVAL AS REQUIRED. VERIFY OR SUPPLY ALL QUANTITIES, ALL DIMENSIONS, ALL INFORMATION, & ALL CONFIGURATIONS.

PRINT RECORD

NO.	USE	DATE
	APPR.	
	APPR.	
	PURCH	
	FAB	
	FAB. OFFICE	
	Q.A.	
	DIST.	
	ERECT.	

OPEN HOLES 15/16 Ø U/N
WELD BRIDGE WELDING CODE: D1.5
STEEL AS NOTED
BOLTS
SURFACE PREP-SP
PAINT SEE SPECS
REF.DRAWING E6, E9

REV	DATE	DESCRIPTION	
0	SEP/10/06	FOR APPROVAL	VS

RAINIER WELDING

19020 NE 84TH STREET - REDMOND, WA 98053
(425) 868-1300 FAX (425) 868-8872
STEEL AND ALUMINUM FABRICATING

PROJECT TOLT BRIDGE No 1834A
THIS DRAWING INCLUDES
FOR SNOHOMISH COUNTY OFFICIAL

DRAWN DJ DATE 07/31/2006 | CHK DSC DATE 09/10/2006 | DWG NUMBER 2707 - 232A △0

☒ CONFORMS TO DESIGN CONCEPT
☐ CONFORMS TO DESIGN CONCEPT WITH REVISIONS AS SHOWN
☐ NON-CONFORMING–REVISE & RESUBMIT

THIS SHOP DRAWING HAS BEEN REVIEWED FOR GENERAL CONFORMANCE WITH DESIGN CONCEPT ONLY AND DOES NOT RELIEVE THE FABRICATOR/VENDOR OF RESPONSIBLITY FOR CONFORMANCE WITH DESIGN DRAWINGS AND SPECIFICATIONS ALL OF WHICH HAVE PRIORITY OVER THIS SHOP DRAWING.

By A.F. Date 10/13/06

LIN & ASSOCIATES, INC.

PRO DRAFT INC. PDI# 676 : PH:(604)589-6425
DRAWINGS PREPARED ON 3D-Xsteel File Name :- A [233.A]
Model Name: 725_102_TOLT_BRIDGE_541
Plot Date: 09/10/2006 12:20:21

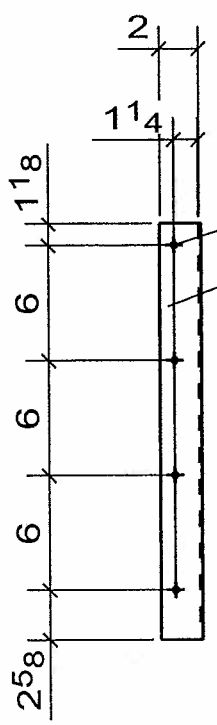

A - A

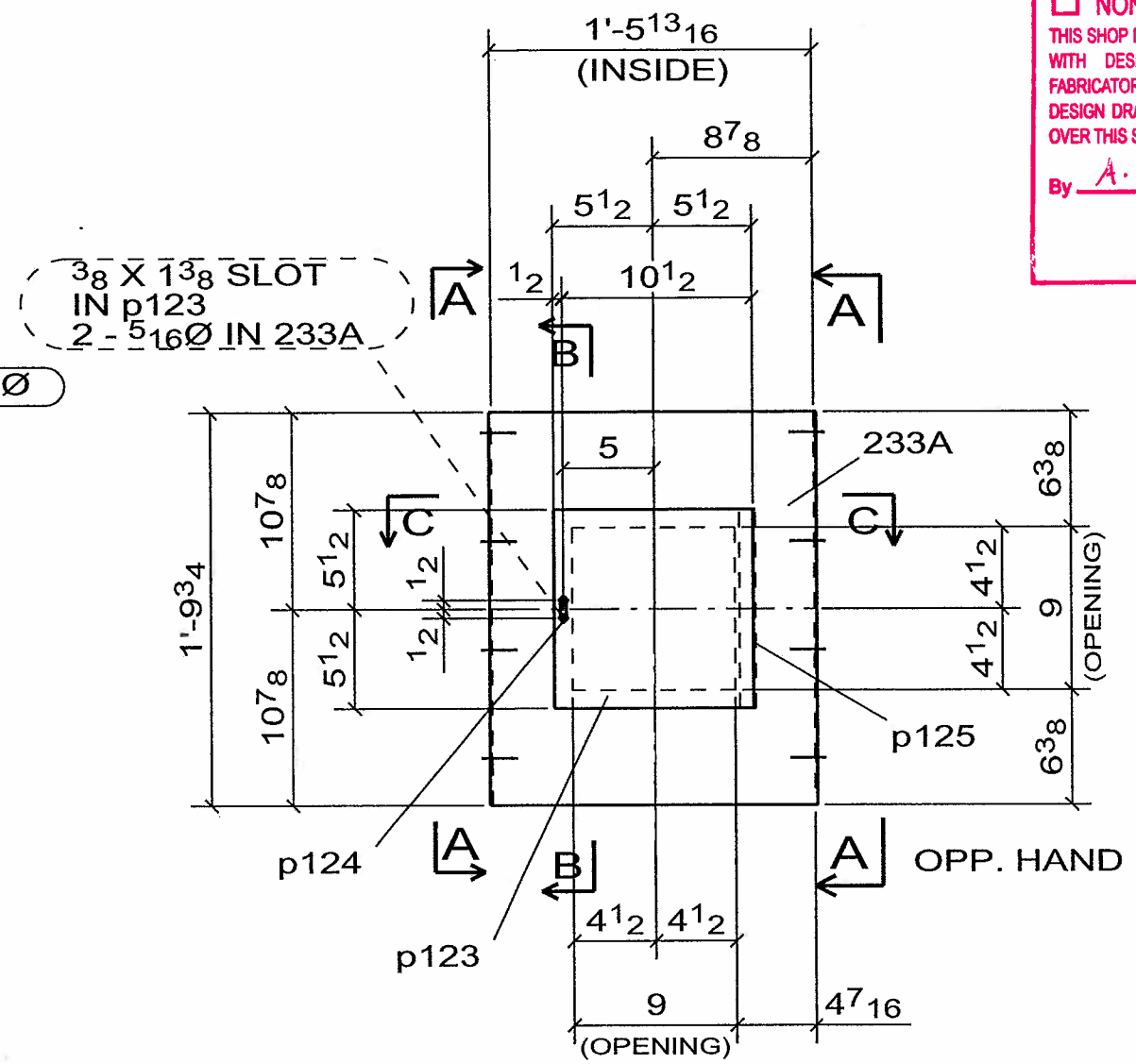

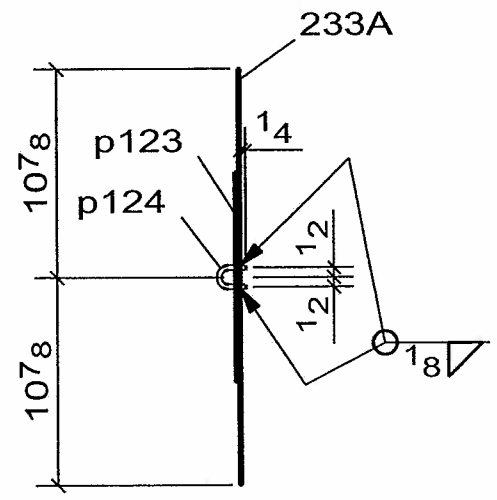

B - B

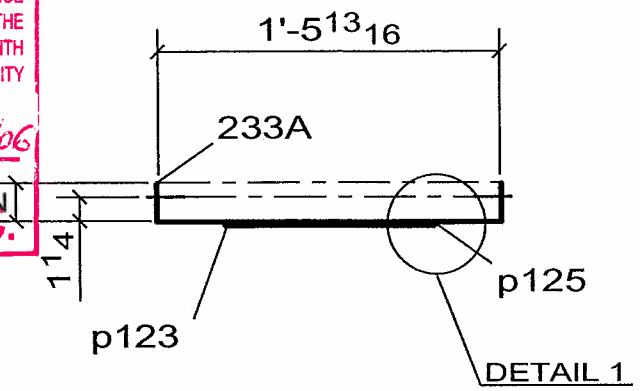

C - C

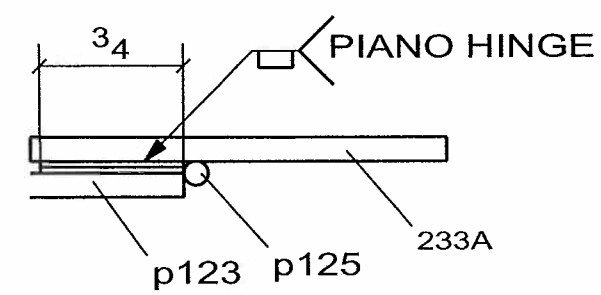

DETAIL1

NOTE
DEBURR EDGES

WELD NOTE FOR ANY ASSEMBLY REQUIRING TACK WELDS:
- ALL TACK WELDS ARE TO BE MADE IN THE WELD JOINT ONLY

2 - SS_COVER -233A

No to SHIP	SHIP MARK	No PIECES	PIECE MARKS	DESCRIPTION	LENGTH	GRADE	REMARKS	WEIGHT	ADVANCE BILL
2	233A			SS_COVER		BRUSHED FINISH		19	
		2	233A	PL[redacted]21 3/4 X 11 GA.	1'-9 13/16"	A304 BEND		14	
		2	p123	FB[redacted]11 X 11 GA.	0'-11"	A304		4	
		2	p124	ROD1/4	0'-3 3/8"	A304 BEND		0	
		2	p125	[redacted] SS PIANO HINGE	0'-11"	A304 W / HOLES		0	
				[redacted]				0	

CONTRACTOR NOTE:
THIS DRAWING IS BEING SUBMITTED FOR APPROVAL AS REQUIRED. VERIFY OR SUPPLY ALL QUANTITIES, ALL DIMENSIONS, ALL INFORMATION, & ALL CONFIGURATIONS.

PRINT RECORD

NO.	USE	DATE
	APPR.	
	APPR.	
	PURCH	
	FAB	
	FAB. OFFICE	
	Q.A.	
	DIST.	
	ERECT.	

OPEN HOLES: 15/16 Ø U/N
WELD: BRIDGE WELDING CODE: D1.5
STEEL: AS NOTED
BOLTS:
SURFACE PREP-SP:
PAINT: SEE SPECS
REF.DRAWING: E7, E8

REV	DATE	DESCRIPTION	
0	SEP/10/06	FOR APPROVAL	VS

RAINIER WELDING

19020 NE 84TH STREET - REDMOND, WA 98053
(425) 868-1300 FAX (425) 868-8872
STEEL AND ALUMINUM FABRICATING

PROJECT: TOLT BRIDGE No 1834A
THIS DRAWING INCLUDES:
FOR: SNOHOMISH COUNTY OFFICIAL

DRAWN DJ DATE 07/31/2006 | CHK DSC DATE 09/10/2006 | DWG NUMBER 2707 - 233A | 0

PRO DRAFT INC. PDI# 676 : PH:(604)589-6425
DRAWINGS PREPARED ON 3D-Xsteel File Name :- A [243.A]
Model Name: 725_102_TOLT_BRIDGE_541
Plot Date: 09/10/2006 12:20:23

☒ CONFORMS TO DESIGN CONCEPT
☐ CONFORMS TO DESIGN CONCEPT WITH REVISIONS AS SHOWN
☐ NON-CONFORMING–REVISE & RESUBMIT
THIS SHOP DRAWING HAS BEEN REVIEWED FOR GENERAL CONFORMANCE WITH DESIGN CONCEPT ONLY AND DOES NOT RELIEVE THE FABRICATOR/VENDOR OF RESPONSIBLITY FOR CONFORMANCE WITH DESIGN DRAWINGS AND SPECIFICATIONS ALL OF WHICH HAVE PRIORITY OVER THIS SHOP DRAWING.
By A. F. Date 10-13-06
LIN & ASSOCIATES, INC.

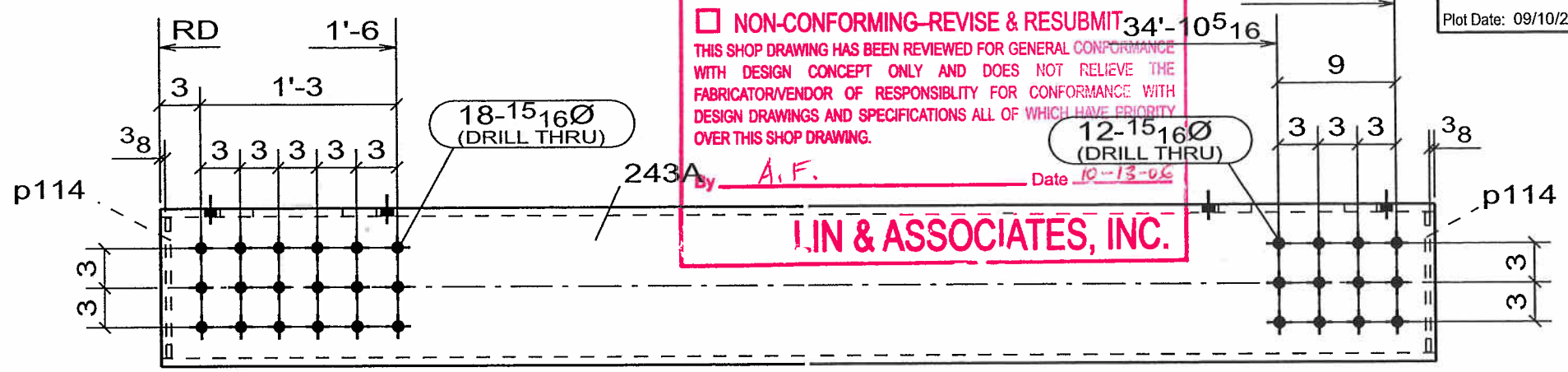

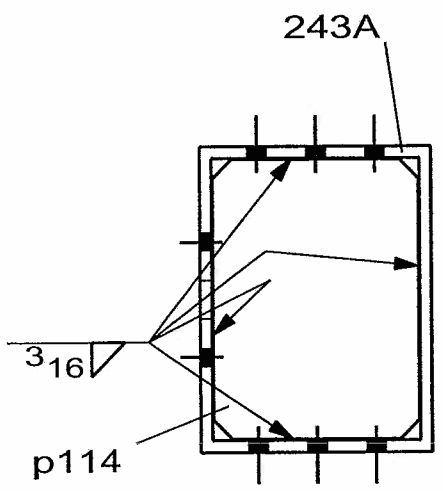

A - A

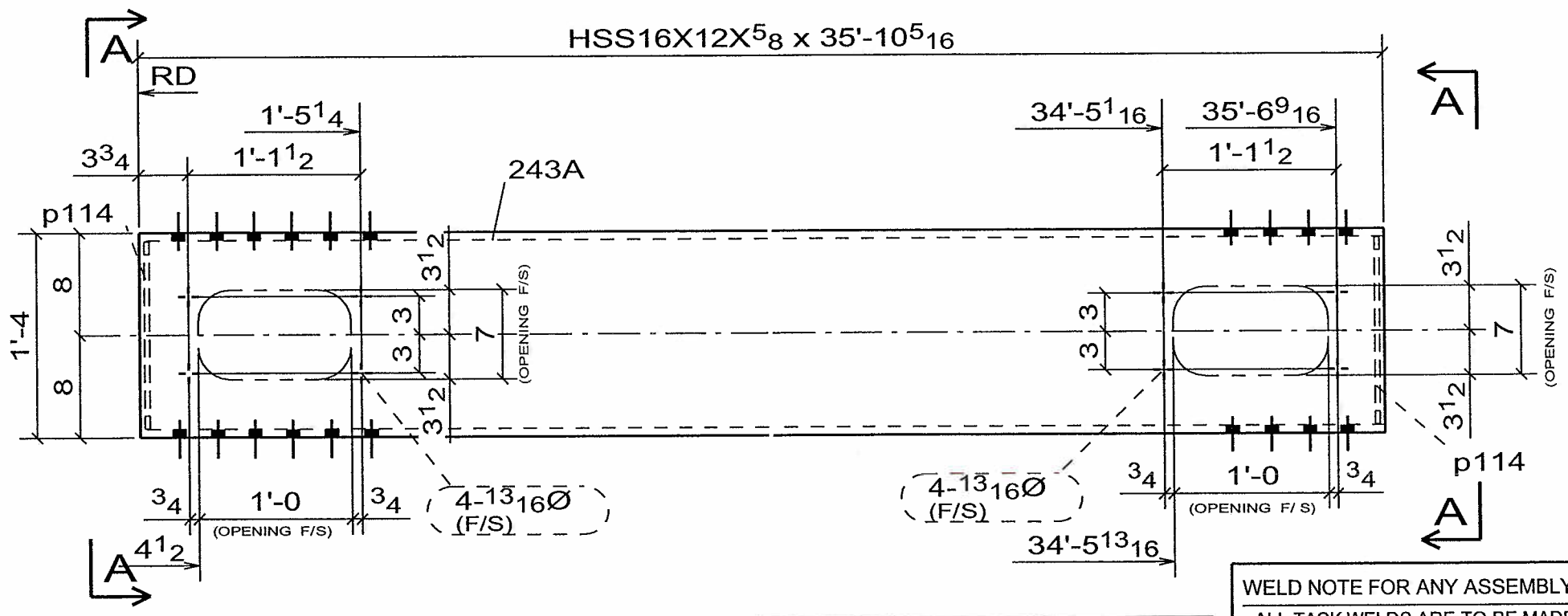

WELD NOTE FOR ANY ASSEMBLY REQUIRING TACK WELDS:
- ALL TACK WELDS ARE TO BE MADE IN THE WELD JOINT ONLY

CONTRACTOR NOTE:
THIS DRAWING IS BEING SUBMITTED FOR APPROVAL AS REQUIRED. VERIFY OR SUPPLY ALL QUANTITIES, ALL DIMENSIONS, ALL INFORMATION, & ALL CONFIGURATIONS.

PRINT RECORD

NO.	USE	DATE
	APPR.	
	APPR.	
	PURCH	
	FAB	
	FAB. OFFICE	
	Q.A.	
	DIST.	
	ERECT.	

OPEN HOLES 15/16 Ø U/N
WELD BRIDGE WELDING CODE: D1.5
STEEL AS NOTED
BOLTS
SURFACE PREP-SP
PAINT SEE SPECS
REF.DRAWING E6, E9

REV	DATE	DESCRIPTION	
0	SEP/10/06	FOR APPROVAL	VS

RAINIER WELDING

19020 NE 84TH STREET - REDMOND, WA 98053
(425) 868-1300 FAX (425) 868-8872
STEEL AND ALUMINUM FABRICATING

PROJECT TOLT BRIDGE No 1834A
THIS DRAWING INCLUDES
FOR SNOHOMISH COUNTY OFFICIAL
DRAWN DJ DATE 07/31/2006
CHK DSC DATE 09/10/2006
DWG NUMBER 2707 - 243A 0

2 - V_BRACE -243A

No to SHIP	SHIP MARK	No PIECES	PIECE MARKS	DESCRIPTION	LENGTH	GRADE	REMARKS	WEIGHT	ADVANCE BILL
2	243A			V_BRACE				4088	
		2	243A	HSS16X12X5/8	35'-10 5/16"	A500-GR.C	FCM/V	4055	
		4	p114	PL3/8X10 5/8	1'-2 5/8"	AASHTO M 270 GR. 50		17	

PRO DRAFT INC. PDI# 676 : PH:(604)589-6425
DRAWINGS PREPARED ON 3D-Xsteel File Name :- A [244.A]
Model Name: 725_102_TOLT_BRIDGE_541
Plot Date: 09/10/2006 12:20:25

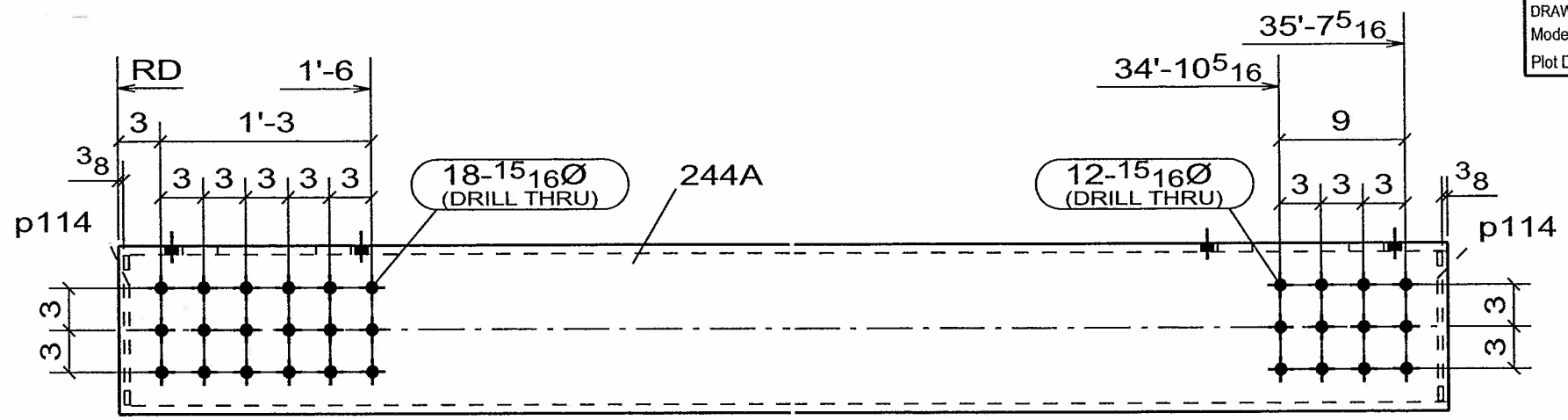

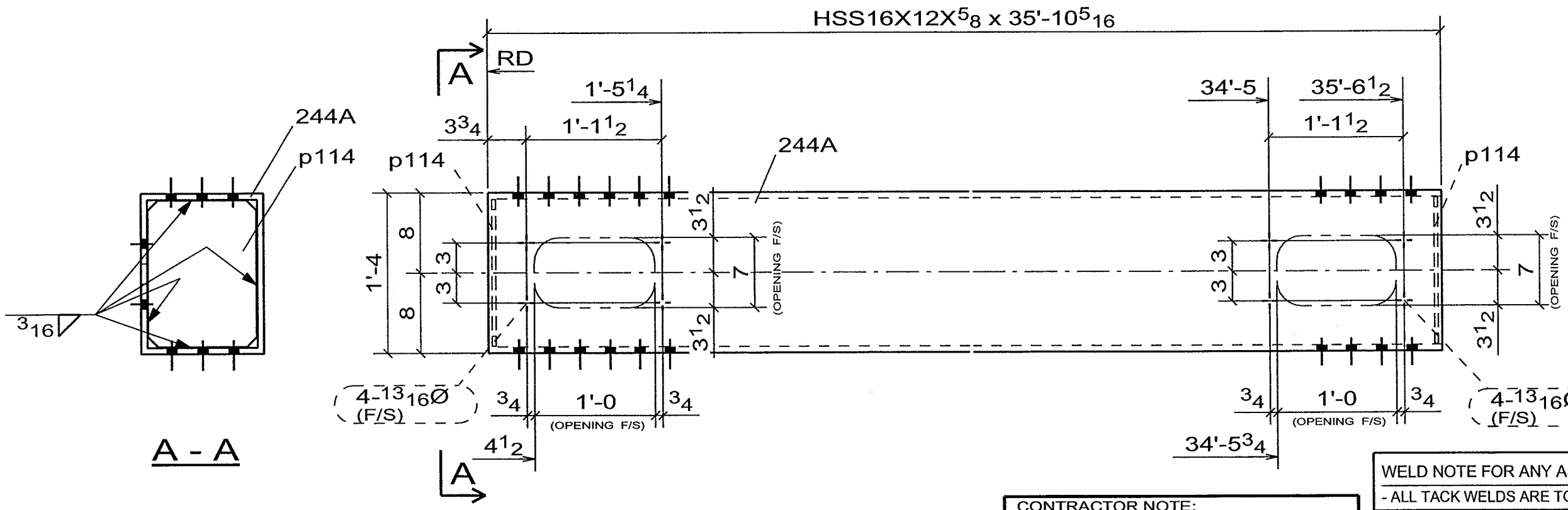

CONFORMS TO DESIGN CONCEPT
CONFORMS TO DESIGN CONCEPT WITH REVISIONS AS SHOWN
NON-CONFORMING-REVISE & RESUBMIT
THIS SHOP DRAWING HAS BEEN REVIEWED FOR GENERAL CONFORMANCE WITH DESIGN CONCEPT ONLY AND DOES NOT RELIEVE THE FABRICATOR/VENDOR OF RESPONSIBILITY FOR CONFORMANCE WITH DESIGN DRAWINGS AND SPECIFICATIONS ALL OF WHICH HAVE PRIORITY OVER THIS SHOP DRAWING.
By A.F. Date 10-13-06
I.IN & ASSOCIATES, INC.

WELD NOTE FOR ANY ASSEMBLY REQUIRING TACK WELDS:
- ALL TACK WELDS ARE TO BE MADE IN THE WELD JOINT ONLY

CONTRACTOR NOTE:
THIS DRAWING IS BEING SUBMITTED FOR APPROVAL AS REQUIRED. VERIFY OR SUPPLY ALL QUANTITIES, ALL DIMENSIONS, ALL INFORMATION, & ALL CONFIGURATIONS.

PRINT RECORD

NO.	USE	DATE
	APPR.	
	APPR.	
	PURCH	
	FAB	
	FAB. OFFICE	
	Q.A.	
	DIST.	
	ERECT.	

OPEN HOLES 15/16 Ø U/N
WELD BRIDGE WELDING CODE: D1.5
STEEL AS NOTED
BOLTS
SURFACE PREP-SP
PAINT SEE SPECS
REF.DRAWING E7, E8

REV	DATE	DESCRIPTION	
0	SEP/10/06	FOR APPROVAL	VS

RAINIER WELDING

19020 NE 84TH STREET - REDMOND, WA 98053
(425) 868-1300 FAX (425) 868-8872
STEEL AND ALUMINUM FABRICATING

PROJECT TOLT BRIDGE No 1834A
THIS DRAWING INCLUDES
FOR SNOHOMISH COUNTY OFFICIAL
DRAWN DJ DATE 07/31/2006 CHK DSC DATE 09/10/2006 DWG NUMBER 2707 - 244A 0

2 - V_BRACE -244A

No to SHIP	SHIP MARK	No PIECES	PIECE MARKS	DESCRIPTION	LENGTH	GRADE	REMARKS	WEIGHT	ADVANCE BILL
2	244A			V_BRACE				4088	
		2	244A	HSS16X12X5/8	35'-10 5/16"	A500-GR.C	FCM/V	4055	
		4	p114	PL3/8X10 5/8	1'-2 5/8"	AASHTO M 270 GR. 50		17	

PRO DRAFT INC. PDI# 676 : PH:(604)589-6425
DRAWINGS PREPARED ON 3D-Xsteel File Name :- A [245.A]
Model Name: 725_102_TOLT_BRIDGE_541
Plot Date: 09/10/2006 12:20:26

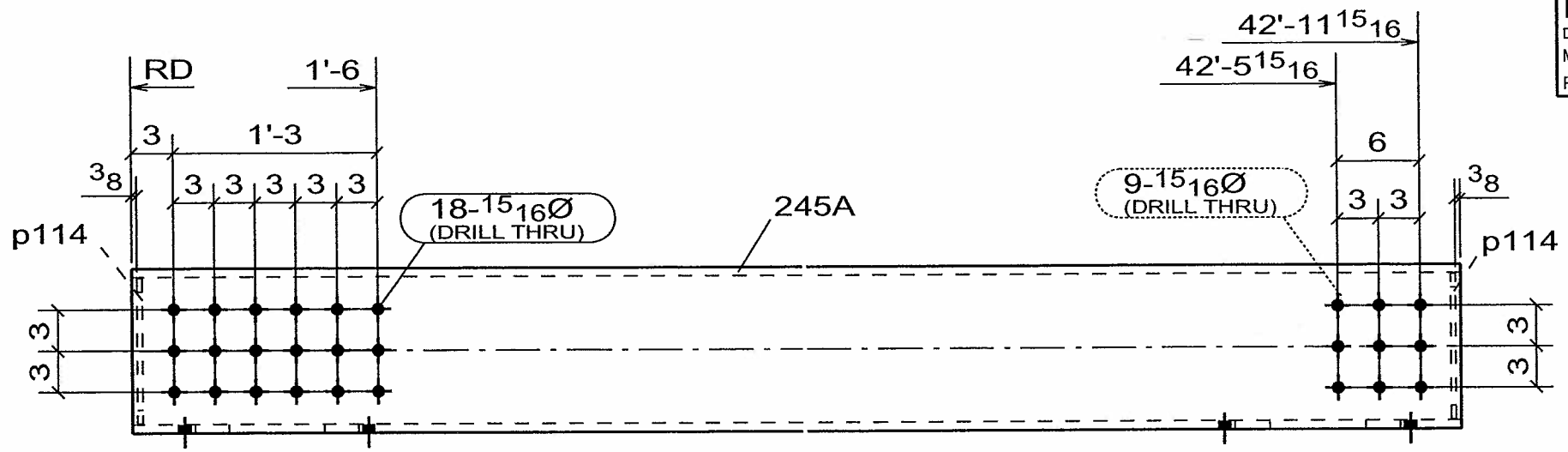

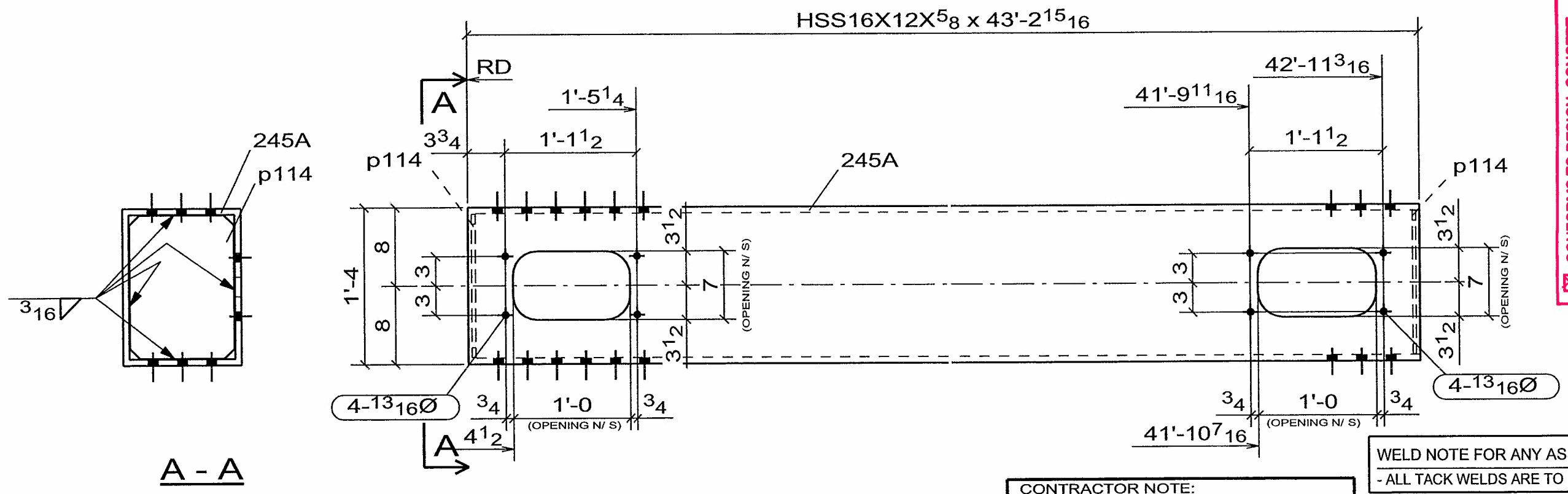

A - A

☒ CONFORMS TO DESIGN CONCEPT
☐ CONFORMS TO DESIGN CONCEPT WITH REVISIONS AS SHOWN
☐ NON-CONFORMING–REVISE & RESUBMIT
THIS SHOP DRAWING HAS BEEN REVIEWED FOR GENERAL CONFORMANCE WITH DESIGN CONCEPT ONLY AND DOES NOT RELIEVE THE FABRICATOR/VENDOR OF RESPONSIBILITY FOR CONFORMANCE WITH DESIGN DRAWINGS AND SPECIFICATIONS ALL OF WHICH HAVE PRIORITY OVER THIS SHOP DRAWING.
By A.F. Date 10-13-06
LIN & ASSOCIATES, INC.

WELD NOTE FOR ANY ASSEMBLY REQUIRING TACK WELDS:
- ALL TACK WELDS ARE TO BE MADE IN THE WELD JOINT ONLY

CONTRACTOR NOTE:
THIS DRAWING IS BEING SUBMITTED FOR APPROVAL AS REQUIRED. VERIFY OR SUPPLY ALL QUANTITIES, ALL DIMENSIONS, ALL INFORMATION, & ALL CONFIGURATIONS.

PRINT RECORD

NO.	USE	DATE
	APPR.	
	APPR.	
	PURCH	
	FAB	
	FAB. OFFICE	
	Q.A.	
	DIST.	
	ERECT.	

OPEN HOLES: 15/16 Ø U/N
WELD: BRIDGE WELDING CODE: D1.5
STEEL: AS NOTED
BOLTS:
SURFACE PREP-SP:
PAINT: SEE SPECS
REF.DRAWING: E6, E7, E8, E9

REV	DATE	DESCRIPTION	
0	SEP/10/06	FOR APPROVAL	VS

RAINIER WELDING

19020 NE 84TH STREET - REDMOND, WA 98053
(425) 868-1300 FAX (425) 868-8872
STEEL AND ALUMINUM FABRICATING

PROJECT: TOLT BRIDGE No 1834A
THIS DRAWING INCLUDES:
FOR: SNOHOMISH COUNTY OFFICIAL
DRAWN DJ DATE 07/31/2006
CHK DSC DATE 09/10/2006
DWG NUMBER 2707 - 245A 0

4 - V_BRACE -245A

No to SHIP	SHIP MARK	No PIECES	PIECE MARKS	DESCRIPTION	LENGTH	GRADE	REMARKS	WEIGHT	ADVANCE BILL
4	245A			V_BRACE				4924	
		4	245A	HSS16X12X5/8	43'-2 15/16"	A500-GR.C	FCM/V	4891	
		8	p114	PL3/8X10 5/8	1'-2 5/8"	AASHTO M 270 GR. 50		17	

PRO DRAFT INC. PDI# 676 : PH:(604)589-6425
DRAWINGS PREPARED ON 3D-Xsteel File Name :- A [247.A]
Model Name: 725_102_TOLT_BRIDGE_541
Plot Date: 09/10/2006 12:20:27

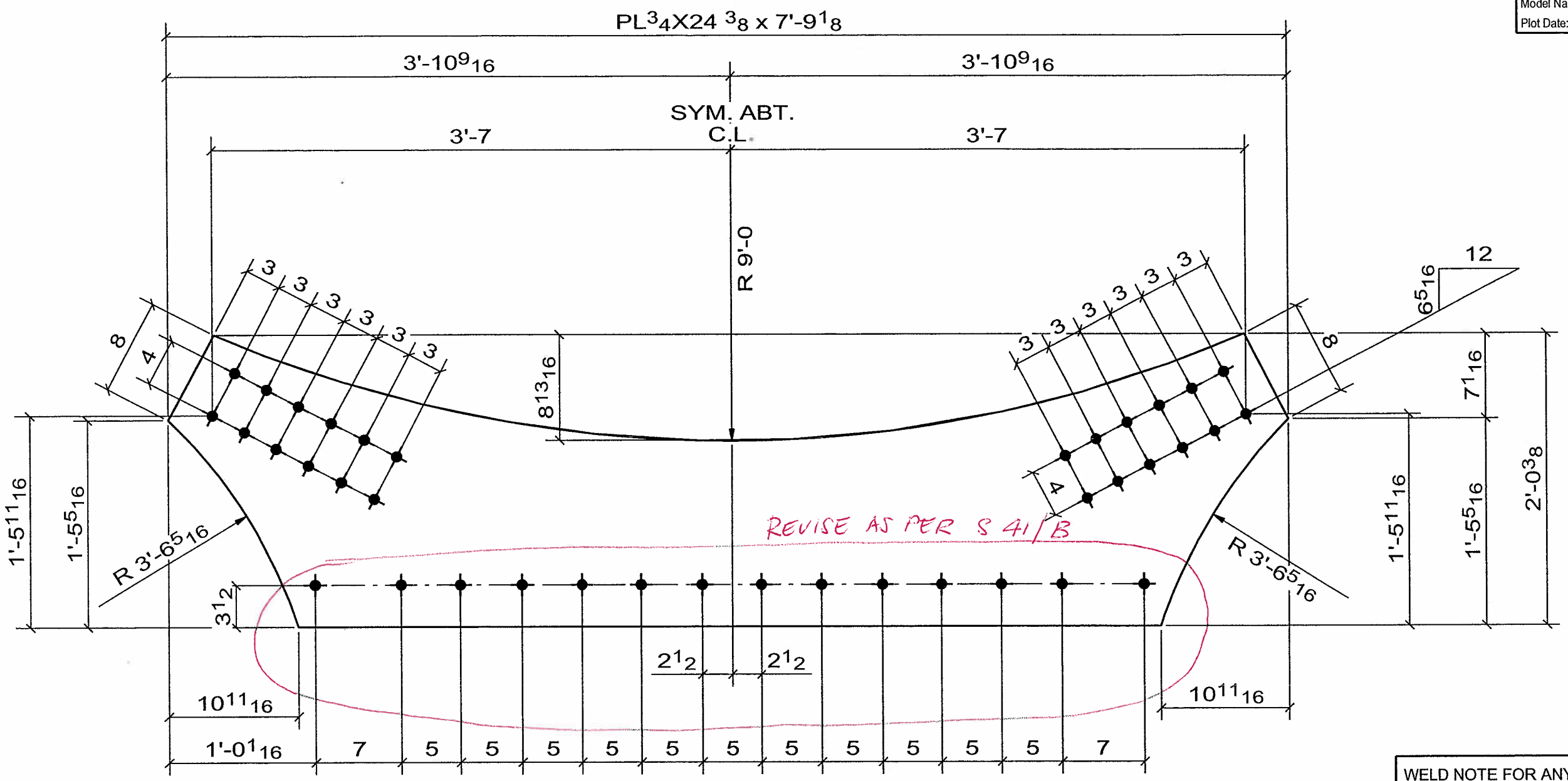

☐ CONFORMS TO DESIGN CONCEPT
☐ CONFORMS TO DESIGN CONCEPT WITH REVISIONS AS SHOWN
☒ NON-CONFORMING–REVISE & RESUBMIT
THIS SHOP DRAWING HAS BEEN REVIEWED FOR GENERAL CONFORMANCE WITH DESIGN CONCEPT ONLY AND DOES NOT RELIEVE THE FABRICATOR/VENDOR OF RESPONSIBILITY FOR CONFORMANCE WITH DESIGN DRAWINGS AND SPECIFICATIONS ALL OF WHICH HAVE PRIORITY OVER THIS SHOP DRAWING.
By A.F. Date 10/13/06
I.IN & ASSOCIATES, INC.

WELD NOTE FOR ANY ASSEMBLY REQUIRING TACK WELDS:
- ALL TACK WELDS ARE TO BE MADE IN THE WELD JOINT ONLY

CONTRACTOR NOTE:
THIS DRAWING IS BEING SUBMITTED FOR APPROVAL AS REQUIRED. VERIFY OR SUPPLY ALL QUANTITIES, ALL DIMENSIONS, ALL INFORMATION, & ALL CONFIGURATIONS.

PRINT RECORD			
NO.	USE	DATE	OPEN HOLES 15/16 Ø U/N
	APPR.		WELD BRIDGE WELDING CODE: D1.5
	APPR.		STEEL AS NOTED
	PURCH		BOLTS
	FAB		SURFACE PREP-SP
	FAB. OFFICE		PAINT SEE SPECS
	Q.A.		REF.DRAWING E10
	DIST.		
	ERECT.		

REV	DATE	DESCRIPTION	
0	SEP/10/06	FOR APPROVAL	VS

RAINIER WELDING

19020 NE 84TH STREET - REDMOND, WA 98053
(425) 868-1300 FAX (425) 868-8872
STEEL AND ALUMINUM FABRICATING

PROJECT TOLT BRIDGE No 1834A
THIS DRAWING INCLUDES
FOR SNOHOMISH COUNTY OFFICIAL
DRAWN DJ CHK DSC
DATE 07/31/2006 DATE 09/10/2006
DWG NUMBER 2707 - 247A △0

2 - GUSSET_PL -247A

No to SHIP	SHIP MARK	No PIECES	PIECE MARKS	DESCRIPTION	LENGTH	GRADE	REMARKS	WEIGHT	ADVANCE BILL
2	247A			GUSSET_PL				481	
		2	247A	PL3/4X24 3/8	7'-9 1/8"	AASHTO M 270 GR. 50		481	

PRO DRAFT INC. PDI# 676 : PH:(604)589-6425
DRAWINGS PREPARED ON 3D-Xsteel File Name :- A [248.A]
Model Name: 725_102_TOLT_BRIDGE_541
Plot Date: 09/10/2006 12:20:28

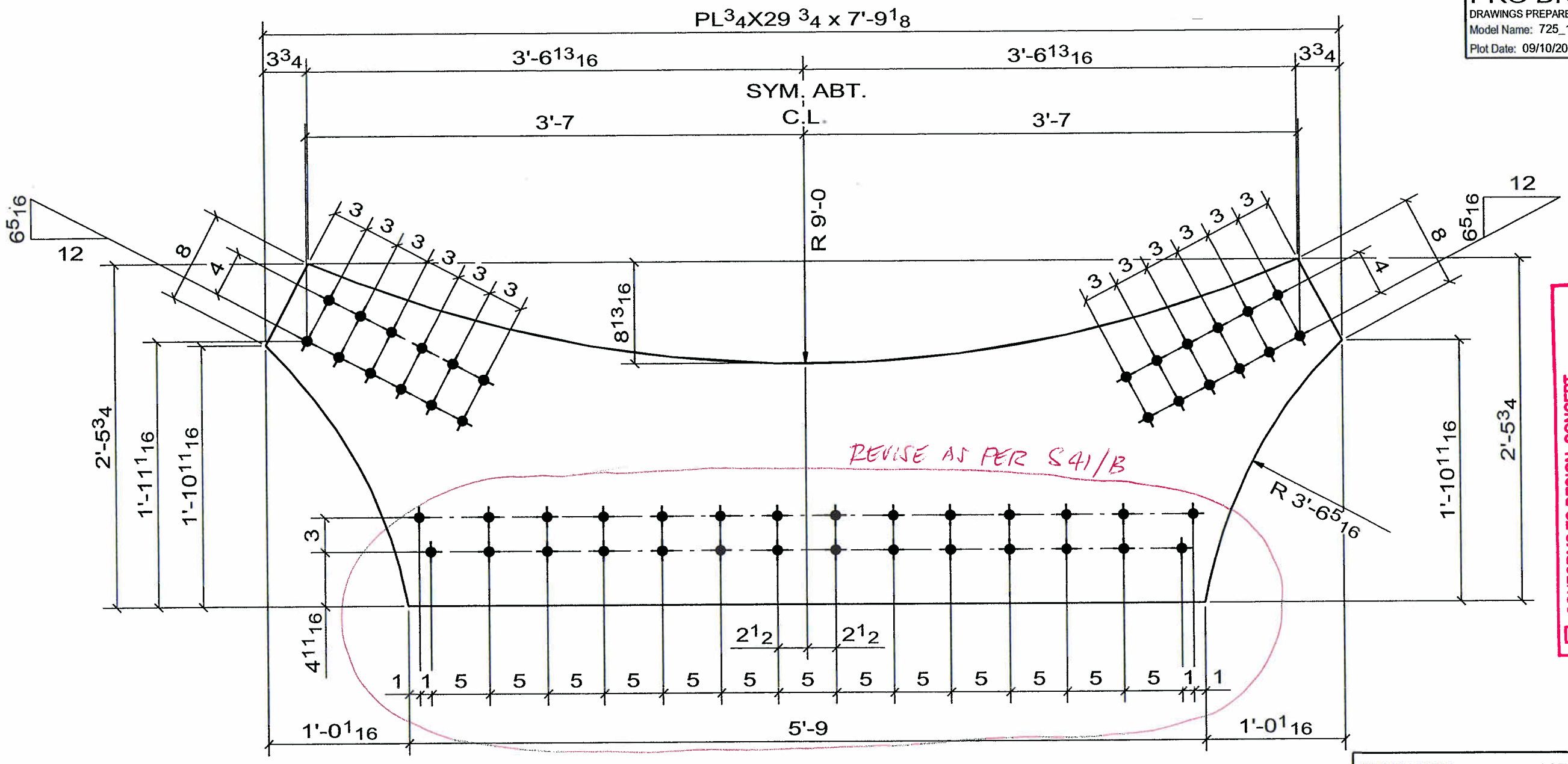

☐ CONFORMS TO DESIGN CONCEPT
☐ CONFORMS TO DESIGN CONCEPT WITH REVISIONS AS SHOWN
☒ NON-CONFORMING–REVISE & RESUBMIT
THIS SHOP DRAWING HAS BEEN REVIEWED FOR GENERAL CONFORMANCE WITH DESIGN CONCEPT ONLY AND DOES NOT RELIEVE THE FABRICATOR/VENDOR OF RESPONSIBILITY FOR CONFORMANCE WITH DESIGN DRAWINGS AND SPECIFICATIONS ALL OF WHICH HAVE PRIORITY OVER THIS SHOP DRAWING.
By A.F. Date 10/12/06
LIN & ASSOCIATES, INC.

WELD NOTE FOR ANY ASSEMBLY REQUIRING TACK WELDS:
- ALL TACK WELDS ARE TO BE MADE IN THE WELD JOINT ONLY

CONTRACTOR NOTE:
THIS DRAWING IS BEING SUBMITTED FOR APPROVAL AS REQUIRED. VERIFY OR SUPPLY ALL QUANTITIES, ALL DIMENSIONS, ALL INFORMATION, & ALL CONFIGURATIONS.

PRINT RECORD

NO.	USE	DATE
	APPR.	
	APPR.	
	PURCH	
	FAB	
	FAB. OFFICE	
	Q.A.	
	DIST.	
	ERECT.	

OPEN HOLES: 15/16 Ø U/N
WELD: BRIDGE WELDING CODE: D1.5
STEEL: AS NOTED
BOLTS:
SURFACE PREP-SP:
PAINT: SEE SPECS
REF.DRAWING: E10

REV	DATE	DESCRIPTION	
0	SEP/10/06	FOR APPROVAL	VS

RAINIER WELDING

19020 NE 84TH STREET - REDMOND, WA 98053
(425) 868-1300 FAX (425) 868-8872
STEEL AND ALUMINUM FABRICATING

PROJECT: TOLT BRIDGE No 1834A
THIS DRAWING INCLUDES:
FOR: SNOHOMISH COUNTY OFFICIAL
DRAWN DJ DATE 07/31/2006 CHK DSC DATE 09/10/2006 DWG NUMBER 2707 - 248A 0

2 - GUSSET_PL -248A

No to SHIP	SHIP MARK	No PIECES	PIECE MARKS	DESCRIPTION	LENGTH	GRADE	REMARKS	WEIGHT	ADVANCE BILL
2	248A			GUSSET_PL				588	
		2	248A	PL3/4X29 3/4	7'-9 1/8"	AASHTO M 270 GR. 50		588	

PRO DRAFT INC. PDI# 676 : PH:(604)589-6425
DRAWINGS PREPARED ON 3D-Xsteel File Name :- A [253.A]
Model Name: 725_102_TOLT_BRIDGE_541
Plot Date: 09/10/2006 12:20:30

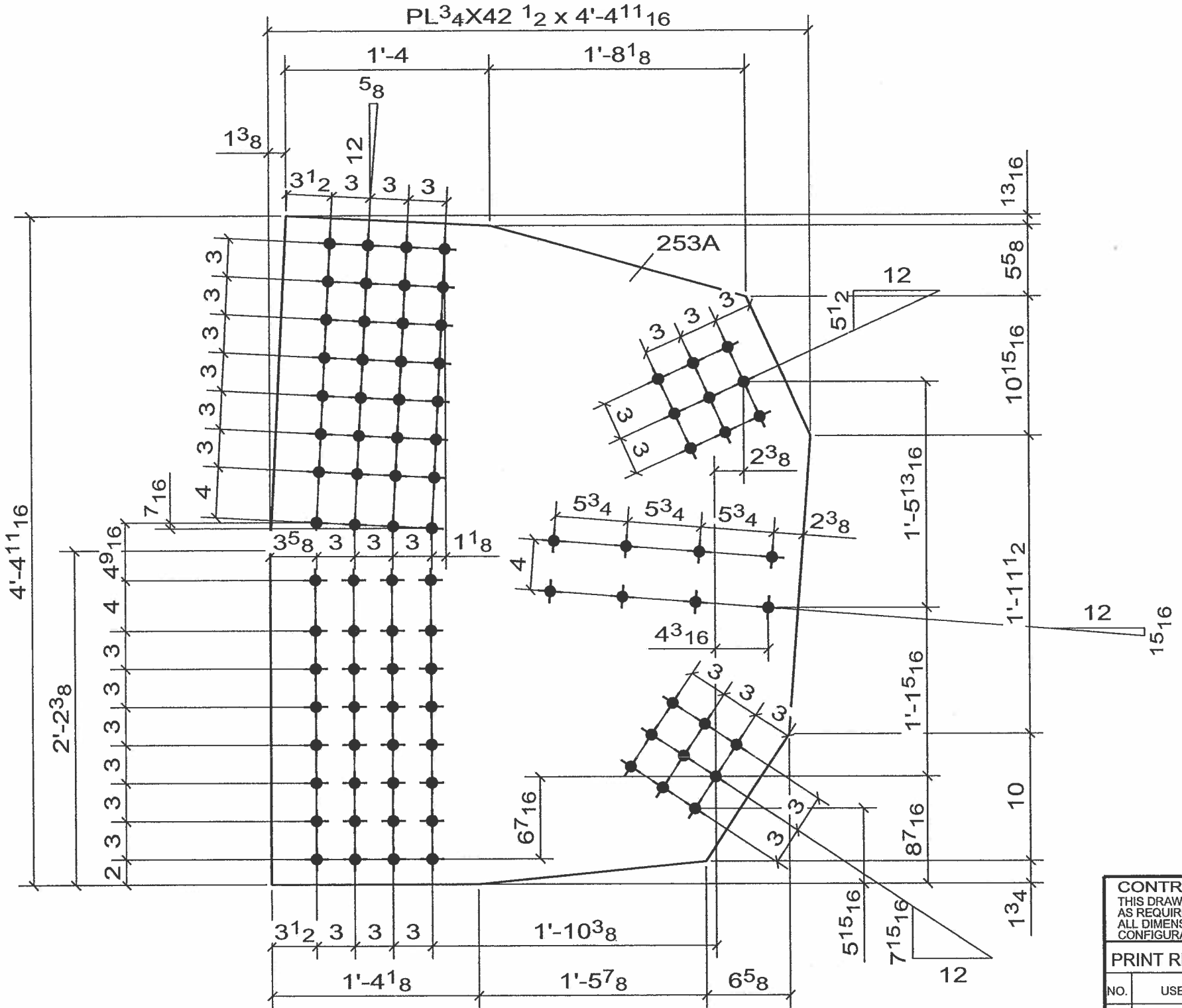

4 - GUSSET_PL -253A

No to SHIP	SHIP MARK	No PIECES	PIECE MARKS	DESCRIPTION	LENGTH	GRADE	REMARKS	WEIGHT	ADVANCE BILL
4	253A			GUSSET_PL				589	
		4	253A	PL3/4X42 1/2	4'-4 11/16"	AASHTO M 270 GR. 50	FCM/V	589	

☒ CONFORMS TO DESIGN CONCEPT
☐ CONFORMS TO DESIGN CONCEPT WITH REVISIONS AS SHOWN
☐ NON-CONFORMING–REVISE & RESUBMIT

THIS SHOP DRAWING HAS BEEN REVIEWED FOR GENERAL CONFORMANCE WITH DESIGN CONCEPT ONLY AND DOES NOT RELIEVE THE FABRICATOR/VENDOR OF RESPONSIBLITY FOR CONFORMANCE WITH DESIGN DRAWINGS AND SPECIFICATIONS ALL OF WHICH HAVE PRIORITY OVER THIS SHOP DRAWING.

By A.F. Date 10-13-06

LIN & ASSOCIATES, INC.

WELD NOTE FOR ANY ASSEMBLY REQUIRING TACK WELDS:
- ALL TACK WELDS ARE TO BE MADE IN THE WELD JOINT ONLY

CONTRACTOR NOTE:
THIS DRAWING IS BEING SUBMITTED FOR APPROVAL AS REQUIRED. VERIFY OR SUPPLY ALL QUANTITIES, ALL DIMENSIONS, ALL INFORMATION, & ALL CONFIGURATIONS.

PRINT RECORD

NO.	USE	DATE
	APPR.	
	APPR.	
	PURCH	
	FAB	
	FAB. OFFICE	
	Q.A.	
	DIST.	
	ERECT.	

OPEN HOLES: 15/16 Ø U/N
WELD: BRIDGE WELDING CODE: D1.5
STEEL: AS NOTED
BOLTS:
SURFACE PREP-SP:
PAINT: SEE SPECS
REF.DRAWING: E6, E7, E8, E9

REV	DATE	DESCRIPTION	
0	SEP/10/06	FOR APPROVAL	VS

RAINIER WELDING

19020 NE 84TH STREET - REDMOND, WA 98053
(425) 868-1300 FAX (425) 868-8872
STEEL AND ALUMINUM FABRICATING

PROJECT: TOLT BRIDGE No 1834A
THIS DRAWING INCLUDES:
FOR: SNOHOMISH COUNTY OFFICIAL

DRAWN DJ DATE 07/31/2006 | CHK DSC DATE 09/10/2006 | DWG NUMBER 2707 - 253A | 0

PRO DRAFT INC. PDI# 676 : PH:(604)589-6425
DRAWINGS PREPARED ON 3D-Xsteel File Name :- A [256.A]
Model Name: 725_102_TOLT_BRIDGE_541
Plot Date: 09/10/2006 12:20:31

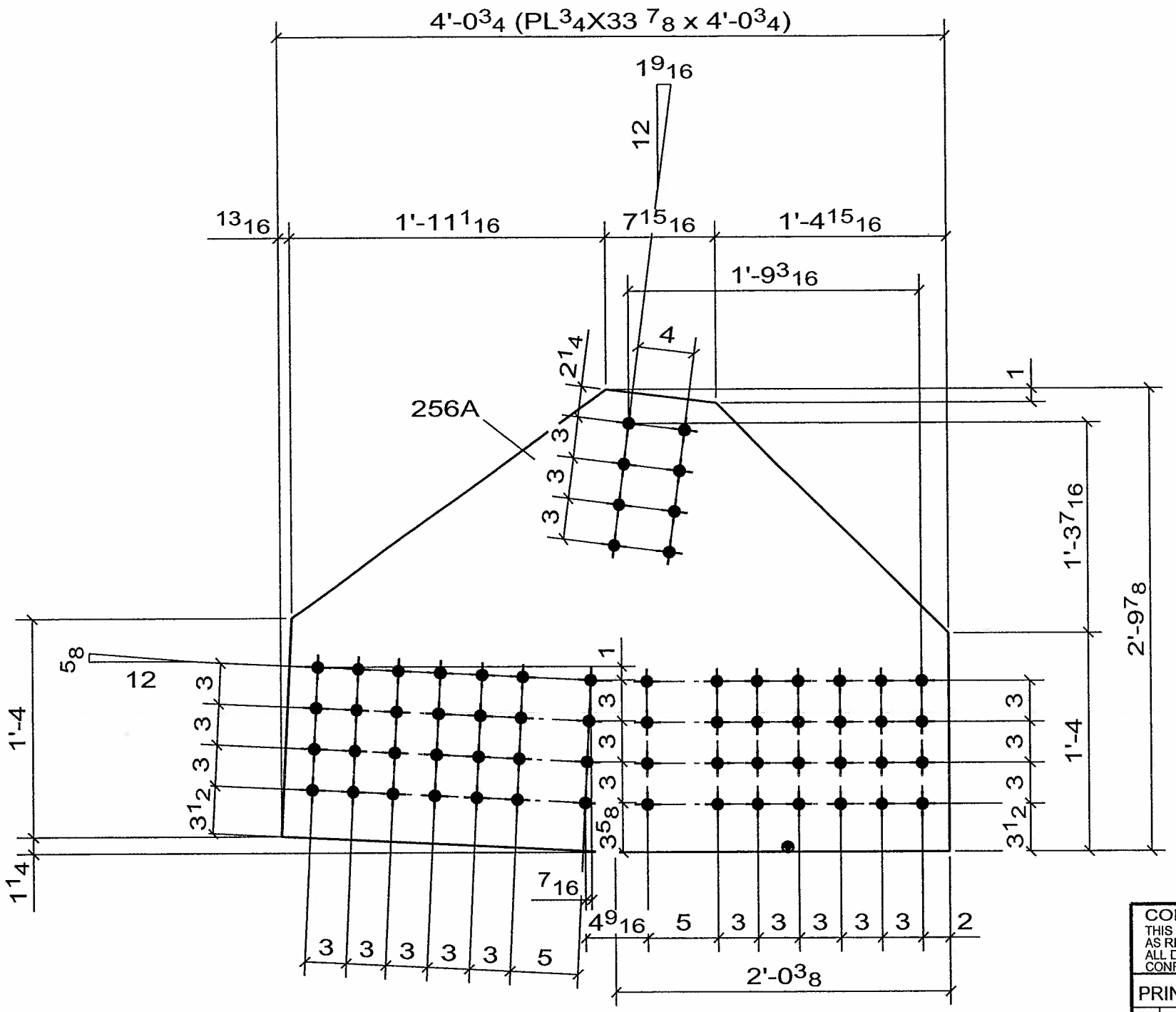

4 - GUSSET_PL -256A

No to SHIP	SHIP MARK	No PIECES	PIECE MARKS	DESCRIPTION	LENGTH	GRADE	REMARKS	WEIGHT	ADVANCE BILL
4	256A			GUSSET_PL				350	
		4	256A	PL3/4X33 7/8	4'-0 3/4"	AASHTO M 270 GR. 50	FCM/V	350	

CONTRACTOR NOTE:
THIS DRAWING IS BEING SUBMITTED FOR APPROVAL AS REQUIRED. VERIFY OR SUPPLY ALL QUANTITIES, ALL DIMENSIONS, ALL INFORMATION, & ALL CONFIGURATIONS.

PRINT RECORD

NO.	USE	DATE
	APPR.	
	APPR.	
	PURCH	
	FAB	
	FAB. OFFICE	
	Q.A.	
	DIST.	
	ERECT.	

OPEN HOLES 15/16 Ø U/N
WELD BRIDGE WELDING CODE: D1.5
STEEL AS NOTED
BOLTS
SURFACE PREP-SP
PAINT SEE SPECS
REF.DRAWING E6, E7, E8, E9

☒ CONFORMS TO DESIGN CONCEPT
☐ CONFORMS TO DESIGN CONCEPT WITH REVISIONS AS SHOWN
☐ NON-CONFORMING–REVISE & RESUBMIT
THIS SHOP DRAWING HAS BEEN REVIEWED FOR GENERAL CONFORMANCE WITH DESIGN CONCEPT ONLY AND DOES NOT RELIEVE THE FABRICATOR/VENDOR OF RESPONSIBLITY FOR CONFORMANCE WITH DESIGN DRAWINGS AND SPECIFICATIONS ALL OF WHICH HAVE PRIORITY OVER THIS SHOP DRAWING.
By A.F. Date 10-13-06
LIN & ASSOCIATES, INC.

WELD NOTE FOR ANY ASSEMBLY REQUIRING TACK WELDS:
- ALL TACK WELDS ARE TO BE MADE IN THE WELD JOINT ONLY

REV	DATE	DESCRIPTION	
0	SEP/10/06	FOR APPROVAL	VS

RAINIER WELDING

19020 NE 84TH STREET - REDMOND, WA 98053
(425) 868-1300 FAX (425) 868-8872
STEEL AND ALUMINUM FABRICATING

PROJECT TOLT BRIDGE No 1834A
THIS DRAWING INCLUDES
FOR SNOHOMISH COUNTY OFFICIAL
DRAWN DJ DATE 07/31/2006
CHK DSC DATE 09/10/2006
DWG NUMBER 2707 - 256A
0

PRO DRAFT INC. PDI# 676 : PH:(604)589-6425
DRAWINGS PREPARED ON 3D-Xsteel File Name :- A [259.A]
Model Name: 725_102_TOLT_BRIDGE_541
Plot Date: 09/10/2006 12:20:32

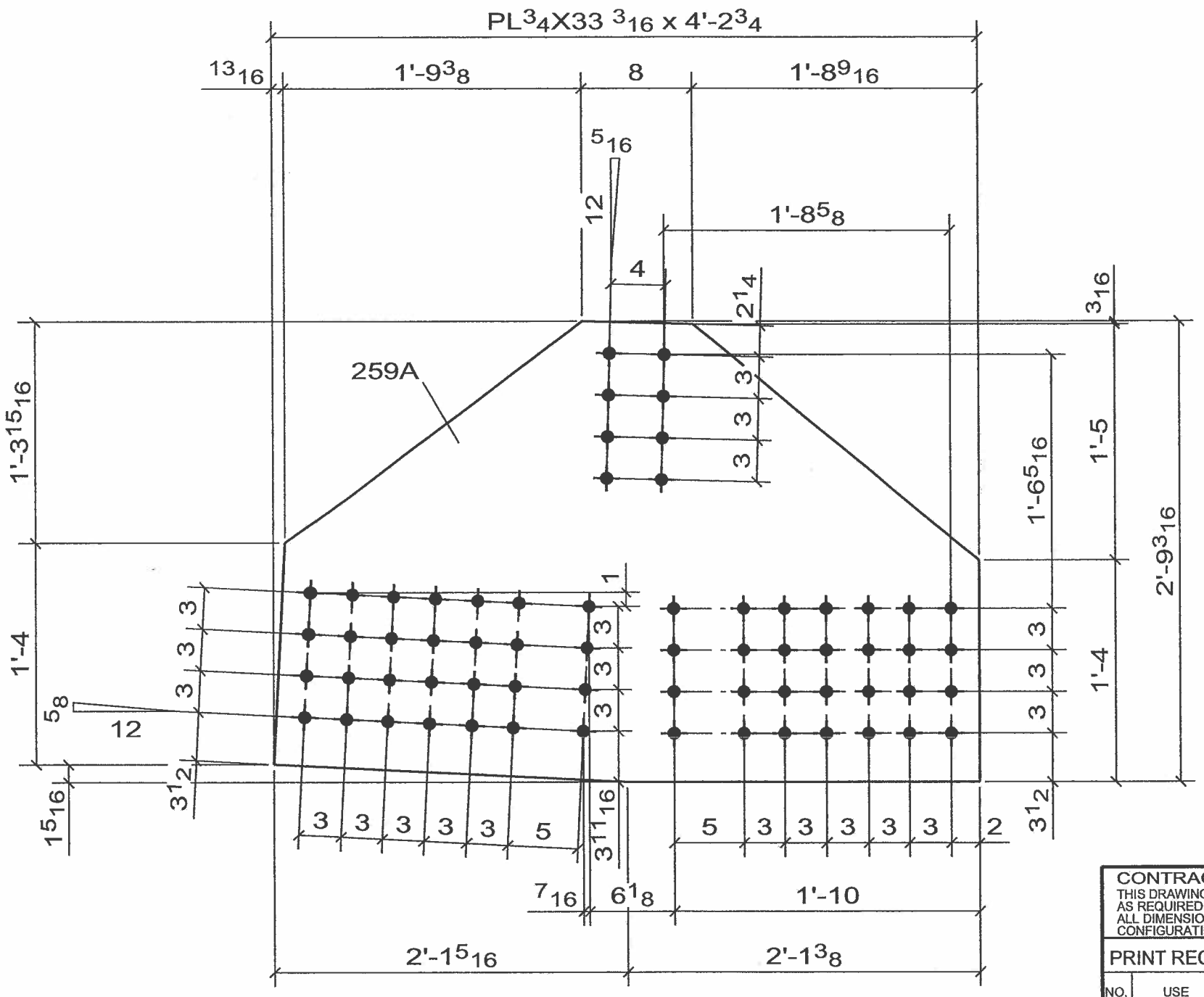

2 - GUSSET_PL -259A

No to SHIP	SHIP MARK	No PIECES	PIECE MARKS	DESCRIPTION	LENGTH	GRADE	REMARKS	WEIGHT	ADVANCE BILL
2	259A			GUSSET_PL				357	
		2	259A	PL3/4X33 3/16	4'-2 3/4"	AASHTO M 270 GR. 50	FCM/V	357	

☒ CONFORMS TO DESIGN CONCEPT
☐ CONFORMS TO DESIGN CONCEPT WITH REVISIONS AS SHOWN
☐ NON-CONFORMING–REVISE & RESUBMIT

THIS SHOP DRAWING HAS BEEN REVIEWED FOR GENERAL CONFORMANCE WITH DESIGN CONCEPT ONLY AND DOES NOT RELIEVE THE FABRICATOR/VENDOR OF RESPONSIBLITY FOR CONFORMANCE WITH DESIGN DRAWINGS AND SPECIFICATIONS ALL OF WHICH HAVE PRIORITY OVER THIS SHOP DRAWING.

By A.F. Date 10-13-06

LIN & ASSOCIATES, INC.

WELD NOTE FOR ANY ASSEMBLY REQUIRING TACK WELDS:
- ALL TACK WELDS ARE TO BE MADE IN THE WELD JOINT ONLY

CONTRACTOR NOTE:
THIS DRAWING IS BEING SUBMITTED FOR APPROVAL AS REQUIRED. VERIFY OR SUPPLY ALL QUANTITIES, ALL DIMENSIONS, ALL INFORMATION, & ALL CONFIGURATIONS.

PRINT RECORD

NO.	USE	DATE
	APPR.	
	APPR.	
	PURCH	
	FAB	
	FAB. OFFICE	
	Q.A.	
	DIST.	
	ERECT.	

OPEN HOLES: 15/16 Ø U/N
WELD: BRIDGE WELDING CODE: D1.5
STEEL: AS NOTED
BOLTS:
SURFACE PREP-SP:
PAINT: SEE SPECS
REF.DRAWING: E6, E8

REV	DATE	DESCRIPTION	
0	SEP/10/06	FOR APPROVAL	VS

RAINIER WELDING

19020 NE 84TH STREET - REDMOND, WA 98053
(425) 868-1300 FAX (425) 868-8872
STEEL AND ALUMINUM FABRICATING

PROJECT: TOLT BRIDGE No 1834A
THIS DRAWING INCLUDES:
FOR: SNOHOMISH COUNTY OFFICIAL

DRAWN DJ DATE 07/31/2006 | CHK DSC DATE 09/10/2006 | DWG NUMBER 2707 - 259A | 0

PRO DRAFT INC. PDI# 676 : PH:(604)589-6425
DRAWINGS PREPARED ON 3D-Xsteel File Name :- A [262.A]
Model Name: 725_102_TOLT_BRIDGE_541
Plot Date: 09/10/2006 12:20:33

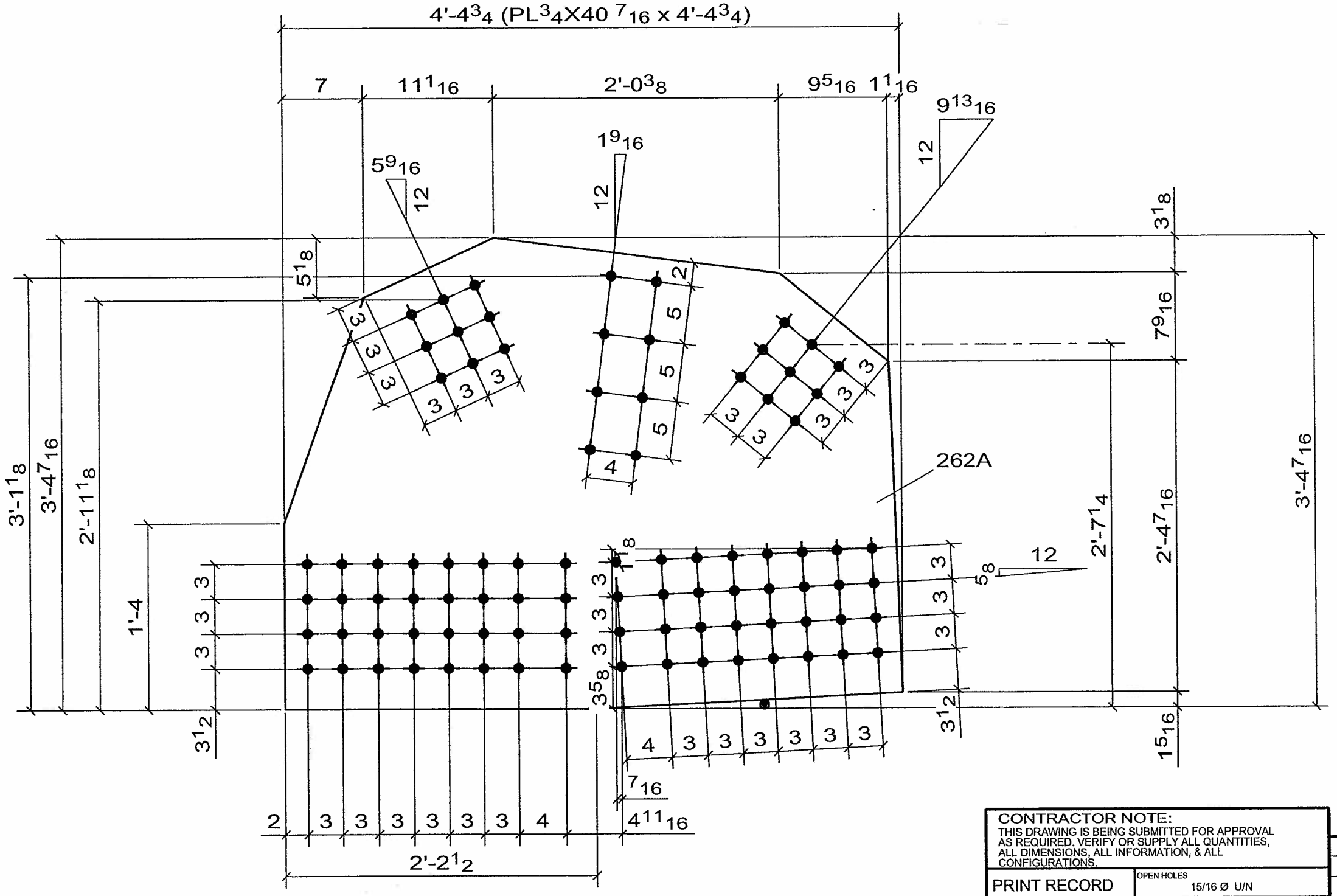

CONFORMS TO DESIGN CONCEPT
CONFORMS TO DESIGN CONCEPT WITH REVISIONS AS SHOWN
NON-CONFORMING–REVISE & RESUBMIT
THIS SHOP DRAWING HAS BEEN REVIEWED FOR GENERAL CONFORMANCE WITH DESIGN CONCEPT ONLY AND DOES NOT RELIEVE THE FABRICATOR/VENDOR OF RESPONSIBLITY FOR CONFORMANCE WITH DESIGN DRAWINGS AND SPECIFICATIONS ALL OF WHICH HAVE PRIORITY OVER THIS SHOP DRAWING.
By A.F. Date 10-13-06
LIN & ASSOCIATES, INC.

WELD NOTE FOR ANY ASSEMBLY REQUIRING TACK WELDS:
- ALL TACK WELDS ARE TO BE MADE IN THE WELD JOINT ONLY

CONTRACTOR NOTE:
THIS DRAWING IS BEING SUBMITTED FOR APPROVAL AS REQUIRED. VERIFY OR SUPPLY ALL QUANTITIES, ALL DIMENSIONS, ALL INFORMATION, & ALL CONFIGURATIONS.

PRINT RECORD			
NO.	USE	DATE	OPEN HOLES 15/16 Ø U/N
	APPR.		WELD BRIDGE WELDING CODE: D1.5
	APPR.		STEEL AS NOTED
	PURCH		BOLTS
	FAB		SURFACE PREP-SP
	FAB. OFFICE		PAINT SEE SPECS
	Q.A.		REF.DRAWING E6, E7, E8, E9
	DIST.		
	ERECT.		

REV	DATE	DESCRIPTION	
0	SEP/10/06	FOR APPROVAL	VS

RAINIER WELDING

19020 NE 84TH STREET - REDMOND, WA 98053
(425) 868-1300 FAX (425) 868-8872
STEEL AND ALUMINUM FABRICATING

PROJECT TOLT BRIDGE No 1834A
THIS DRAWING INCLUDES
FOR SNOHOMISH COUNTY OFFICIAL

DRAWN DJ	CHK DSC	DWG NUMBER
DATE 07/31/2006	DATE 09/10/2006	2707 - 262A (0)

4 - GUSSET_PL -262A

No to SHIP	SHIP MARK	No PIECES	PIECE MARKS	DESCRIPTION	LENGTH	GRADE	REMARKS	WEIGHT	ADVANCE BILL
4	262A			GUSSET_PL				453	
		4	262A	PL3/4X40 7/16	4'-4 3/4"	AASHTO M 270 GR. 50	FCM/V	453	

PRO DRAFT INC. PDI# 676 : PH:(604)589-6425
DRAWINGS PREPARED ON 3D-Xsteel File Name :- A [265.A]
Model Name: 725_102_TOLT_BRIDGE_541
Plot Date: 09/10/2006 12:20:35

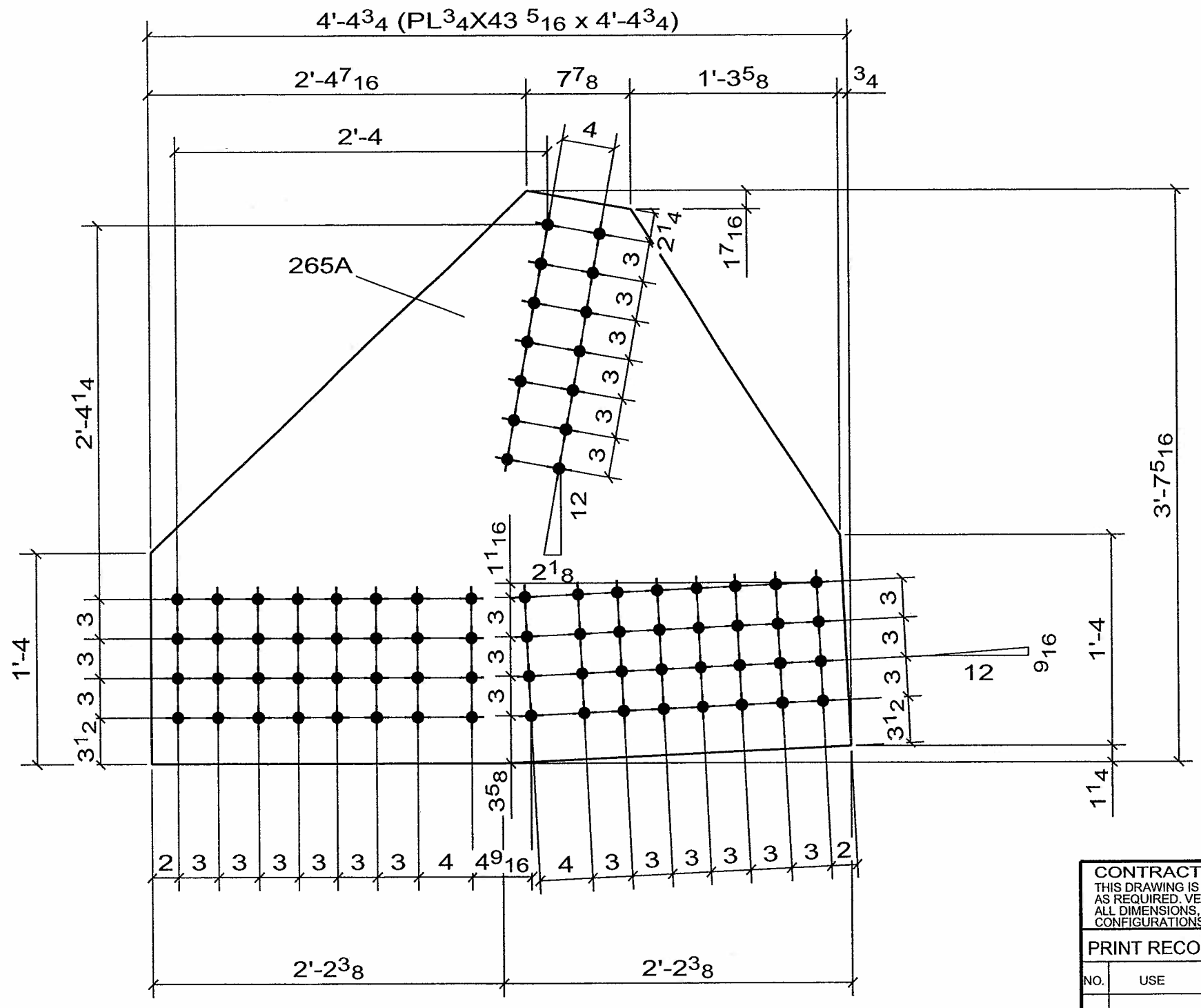

4 - GUSSET_PL -265A

No to SHIP	SHIP MARK	No PIECES	PIECE MARKS	DESCRIPTION	LENGTH	GRADE	REMARKS	WEIGHT	ADVANCE BILL
4	265A			GUSSET_PL				485	
		4	265A	PL3/4X43 5/16	4'-4 3/4"	AASHTO M 270 GR. 50	FCM/V	485	

☒ CONFORMS TO DESIGN CONCEPT
☐ CONFORMS TO DESIGN CONCEPT WITH REVISIONS AS SHOWN
☐ NON-CONFORMING–REVISE & RESUBMIT

THIS SHOP DRAWING HAS BEEN REVIEWED FOR GENERAL CONFORMANCE WITH DESIGN CONCEPT ONLY AND DOES NOT RELIEVE THE FABRICATOR/VENDOR OF RESPONSIBLITY FOR CONFORMANCE WITH DESIGN DRAWINGS AND SPECIFICATIONS ALL OF WHICH HAVE PRIORITY OVER THIS SHOP DRAWING.

By A.F. Date 10-13-06

LIN & ASSOCIATES, INC.

WELD NOTE FOR ANY ASSEMBLY REQUIRING TACK WELDS:
- ALL TACK WELDS ARE TO BE MADE IN THE WELD JOINT ONLY

CONTRACTOR NOTE:
THIS DRAWING IS BEING SUBMITTED FOR APPROVAL AS REQUIRED. VERIFY OR SUPPLY ALL QUANTITIES, ALL DIMENSIONS, ALL INFORMATION, & ALL CONFIGURATIONS.

PRINT RECORD

NO.	USE	DATE
	APPR.	
	APPR.	
	PURCH	
	FAB	
	FAB. OFFICE	
	Q.A.	
	DIST.	
	ERECT.	

OPEN HOLES 15/16 Ø U/N
WELD BRIDGE WELDING CODE: D1.5
STEEL AS NOTED
BOLTS
SURFACE PREP-SP
PAINT SEE SPECS
REF.DRAWING E6, E7, E8, E9

REV	DATE	DESCRIPTION	
0	SEP/10/06	FOR APPROVAL	VS

RAINIER WELDING

19020 NE 84TH STREET - REDMOND, WA 98053
(425) 868-1300 FAX (425) 868-8872
STEEL AND ALUMINUM FABRICATING

PROJECT TOLT BRIDGE No 1834A
THIS DRAWING INCLUDES
FOR SNOHOMISH COUNTY OFFICIAL

DRAWN DJ DATE 07/31/2006 | CHK DSC DATE 09/10/2006 | DWG NUMBER 2707 - 265A | 0

PRO DRAFT INC. PDI# 676 : PH:(604)589-6425
DRAWINGS PREPARED ON 3D-Xsteel File Name :- A [268.A]
Model Name: 725_102_TOLT_BRIDGE_541
Plot Date: 09/10/2006 12:20:36

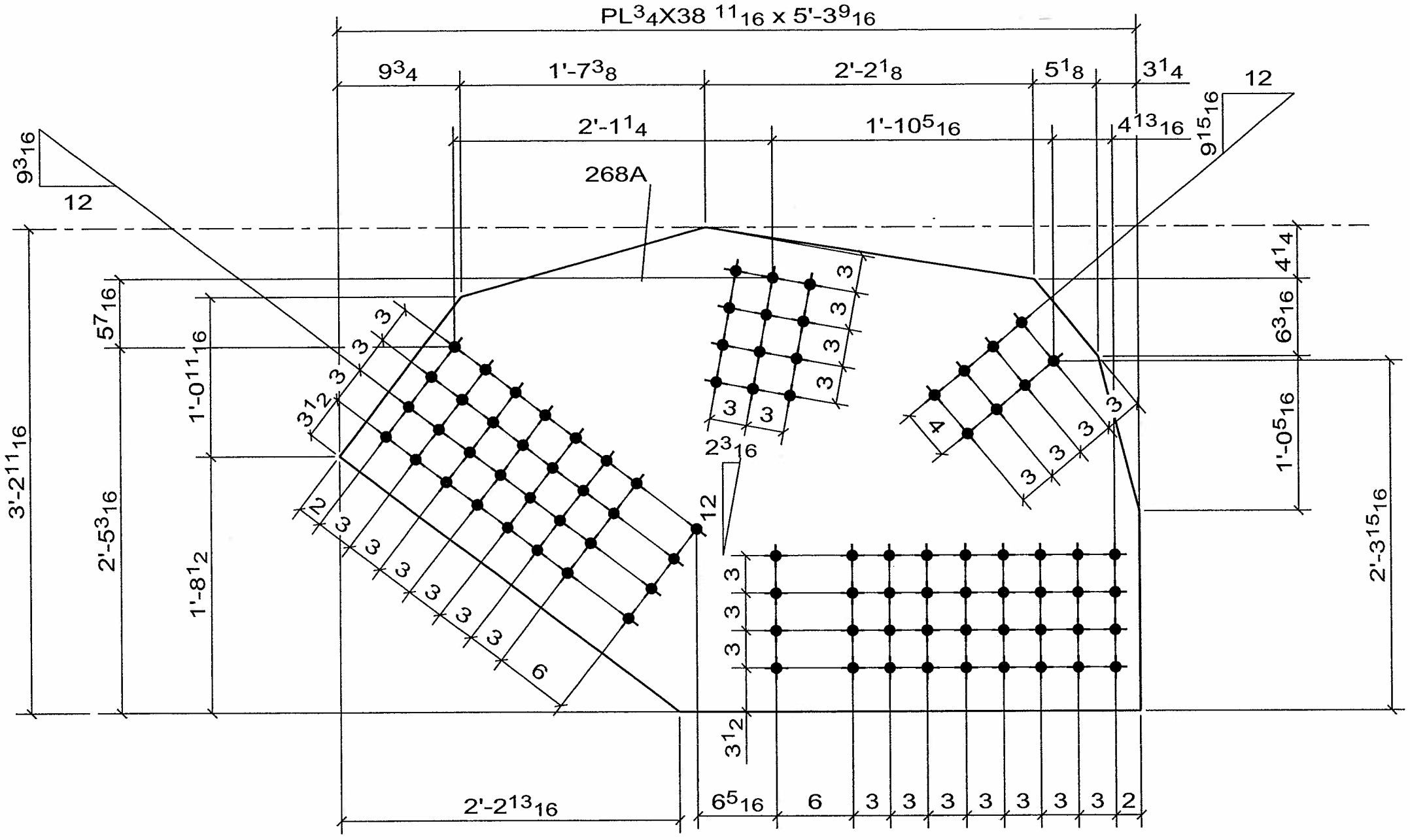

☒ CONFORMS TO DESIGN CONCEPT
☐ CONFORMS TO DESIGN CONCEPT WITH REVISIONS AS SHOWN
☐ NON-CONFORMING–REVISE & RESUBMIT

THIS SHOP DRAWING HAS BEEN REVIEWED FOR GENERAL CONFORMANCE WITH DESIGN CONCEPT ONLY AND DOES NOT RELIEVE THE FABRICATOR/VENDOR OF RESPONSIBLITY FOR CONFORMANCE WITH DESIGN DRAWINGS AND SPECIFICATIONS ALL OF WHICH HAVE PRIORITY OVER THIS SHOP DRAWING.

By A.F. Date 10-13-06

LIN & ASSOCIATES, INC.

WELD NOTE FOR ANY ASSEMBLY REQUIRING TACK WELDS:
- ALL TACK WELDS ARE TO BE MADE IN THE WELD JOINT ONLY

CONTRACTOR NOTE:
THIS DRAWING IS BEING SUBMITTED FOR APPROVAL AS REQUIRED. VERIFY OR SUPPLY ALL QUANTITIES, ALL DIMENSIONS, ALL INFORMATION, & ALL CONFIGURATIONS.

PRINT RECORD

NO.	USE	DATE
	APPR.	
	APPR.	
	PURCH	
	FAB	
	FAB. OFFICE	
	Q.A.	
	DIST.	
	ERECT.	

OPEN HOLES: 15/16 Ø U/N
WELD: BRIDGE WELDING CODE: D1.5
STEEL: AS NOTED
BOLTS:
SURFACE PREP-SP:
PAINT: SEE SPECS
REF.DRAWING: E6, E7, E8, E9

REV	DATE	DESCRIPTION	
0	SEP/10/06	FOR APPROVAL	VS

RAINIER WELDING

19020 NE 84TH STREET - REDMOND, WA 98053
(425) 868-1300 FAX (425) 868-8872
STEEL AND ALUMINUM FABRICATING

PROJECT: TOLT BRIDGE No 1834A
THIS DRAWING INCLUDES:
FOR: SNOHOMISH COUNTY OFFICIAL

DRAWN DJ DATE 07/31/2006 | CHK DSC DATE 09/10/2006 | DWG NUMBER 2707 - 268A | 0

4 - GUSSET_PL -268A

No to SHIP	SHIP MARK	No PIECES	PIECE MARKS	DESCRIPTION	LENGTH	GRADE	REMARKS	WEIGHT	ADVANCE BILL
4	268A			GUSSET_PL				522	
		4	268A	PL3/4X38 11/16	5'-3 9/16"	AASHTO M 270 GR. 50	FCM/V	522	

PRO DRAFT INC. PDI# 676 : PH:(604)589-6425
DRAWINGS PREPARED ON 3D-Xsteel File Name :- A [272.A]
Model Name: 725_102_TOLT_BRIDGE_541
Plot Date: 09/10/2006 12:20:37

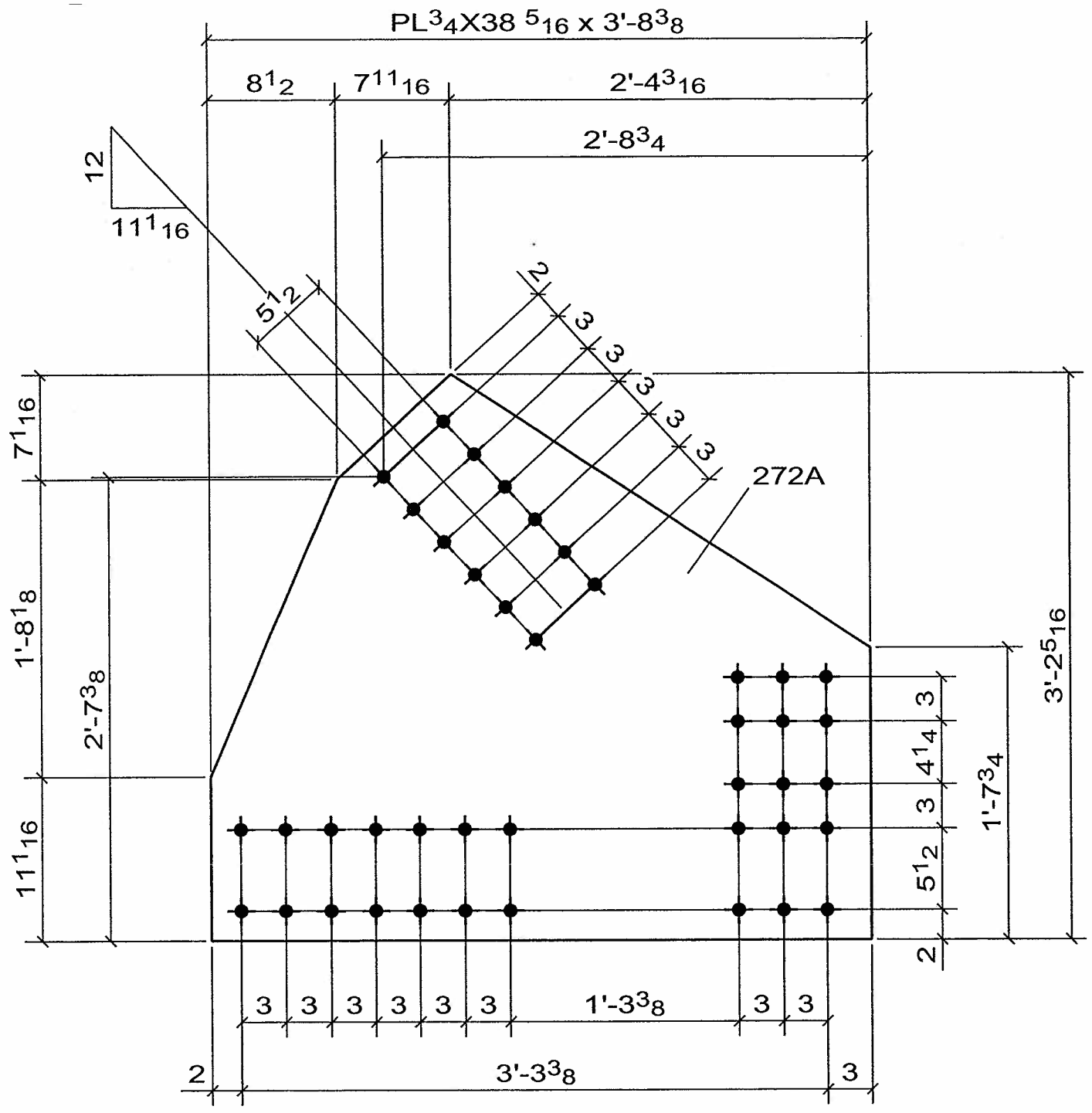

4 - GUSSET_PL -272A

No to SHIP	SHIP MARK	No PIECES	PIECE MARKS	DESCRIPTION	LENGTH	GRADE	REMARKS	WEIGHT	ADVANCE BILL
4	272A			GUSSET_PL				361	
		4	272A	PL3/4X38 5/16	3'-8 3/8"	AASHTO M 270 GR. 50	FCM/V	361	

CONTRACTOR NOTE:
THIS DRAWING IS BEING SUBMITTED FOR APPROVAL AS REQUIRED. VERIFY OR SUPPLY ALL QUANTITIES, ALL DIMENSIONS, ALL INFORMATION, & ALL CONFIGURATIONS.

PRINT RECORD

NO.	USE	DATE
	APPR.	
	APPR.	
	PURCH	
	FAB	
	FAB. OFFICE	
	Q.A.	
	DIST.	
	ERECT.	

OPEN HOLES 15/16 Ø U/N
WELD BRIDGE WELDING CODE: D1.5
STEEL AS NOTED
BOLTS
SURFACE PREP-SP
PAINT SEE SPECS
REF.DRAWING E2, E3

☒ CONFORMS TO DESIGN CONCEPT
☐ CONFORMS TO DESIGN CONCEPT WITH REVISIONS AS SHOWN
☐ NON-CONFORMING-REVISE & RESUBMIT
THIS SHOP DRAWING HAS BEEN REVIEWED FOR GENERAL CONFORMANCE WITH DESIGN CONCEPT ONLY AND DOES NOT RELIEVE THE FABRICATOR/VENDOR OF RESPONSIBILITY FOR CONFORMANCE WITH DESIGN DRAWINGS AND SPECIFICATIONS ALL OF WHICH HAVE PRIORITY OVER THIS SHOP DRAWING.
By A.F. Date 10-13-06
LIN & ASSOCIATES, INC.

WELD NOTE FOR ANY ASSEMBLY REQUIRING TACK WELDS:
- ALL TACK WELDS ARE TO BE MADE IN THE WELD JOINT ONLY

REV	DATE	DESCRIPTION	
0	SEP/10/06	FOR APPROVAL	VS

RAINIER WELDING

19020 NE 84TH STREET - REDMOND, WA 98053
(425) 868-1300 FAX (425) 868-8872
STEEL AND ALUMINUM FABRICATING

PROJECT TOLT BRIDGE No 1834A
THIS DRAWING INCLUDES
FOR SNOHOMISH COUNTY OFFICIAL

DRAWN DJ DATE 07/31/2006
CHK DSC DATE 09/10/2006
DWG NUMBER 2707 - 272A △0

PRO DRAFT INC. PDI# 676 PH:(604)589-6425
DRAWINGS PREPARED ON 3D-Xsteel File Name :- A [273.A]
Model Name: 725_102_TOLT_BRIDGE_541
Plot Date: 09/10/2006 12:20:38

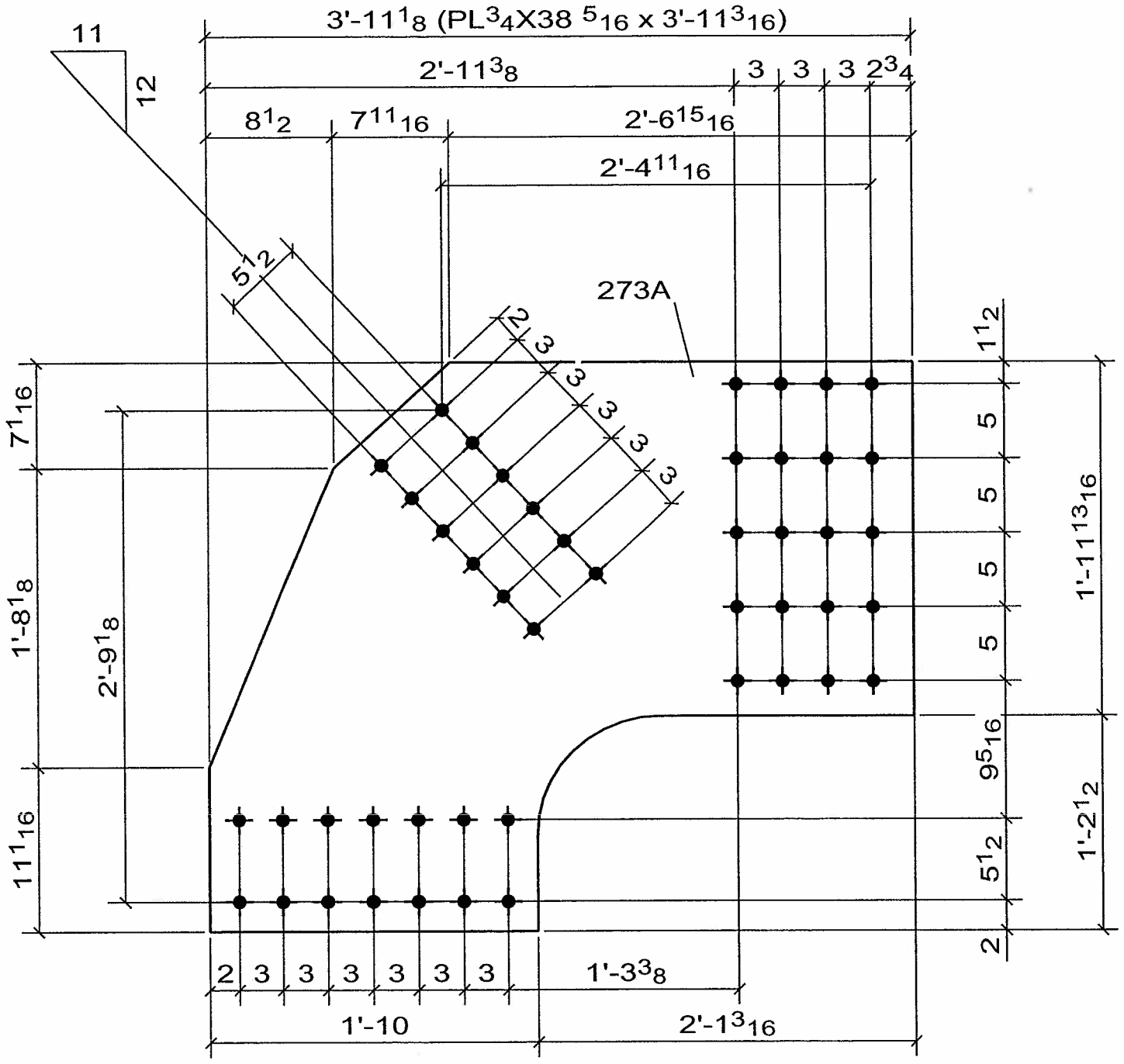

4 - GUSSET_PL -273A

No to SHIP	SHIP MARK	No PIECES	PIECE MARKS	DESCRIPTION	LENGTH	GRADE	REMARKS	WEIGHT	ADVANCE BILL
4	273A			GUSSET_PL				383	
		4	273A	PL3/4X38 5/16	3'-11 3/16"	AASHTO M 270 GR. 50	FCM/V	383	

☒ CONFORMS TO DESIGN CONCEPT
☐ CONFORMS TO DESIGN CONCEPT WITH REVISIONS AS SHOWN
☐ NON-CONFORMING–REVISE & RESUBMIT

THIS SHOP DRAWING HAS BEEN REVIEWED FOR GENERAL CONFORMANCE WITH DESIGN CONCEPT ONLY AND DOES NOT RELIEVE THE FABRICATOR/VENDOR OF RESPONSIBLITY FOR CONFORMANCE WITH DESIGN DRAWINGS AND SPECIFICATIONS ALL OF WHICH HAVE PRIORITY OVER THIS SHOP DRAWING.

By A.F. Date 10-13-06

LIN & ASSOCIATES, INC.

WELD NOTE FOR ANY ASSEMBLY REQUIRING TACK WELDS:
- ALL TACK WELDS ARE TO BE MADE IN THE WELD JOINT ONLY

CONTRACTOR NOTE:
THIS DRAWING IS BEING SUBMITTED FOR APPROVAL AS REQUIRED. VERIFY OR SUPPLY ALL QUANTITIES, ALL DIMENSIONS, ALL INFORMATION, & ALL CONFIGURATIONS.

PRINT RECORD

NO.	USE	DATE
	APPR.	
	APPR.	
	PURCH	
	FAB	
	FAB. OFFICE	
	Q.A.	
	DIST.	
	ERECT.	

OPEN HOLES: 15/16 Ø U/N
WELD: BRIDGE WELDING CODE: D1.5
STEEL: AS NOTED
BOLTS:
SURFACE PREP-SP:
PAINT: SEE SPECS
REF.DRAWING: E2, E3

REV	DATE	DESCRIPTION	
0	SEP/10/06	FOR APPROVAL	VS

RAINIER WELDING

19020 NE 84TH STREET - REDMOND, WA 98053
(425) 868-1300 FAX (425) 868-8872
STEEL AND ALUMINUM FABRICATING

PROJECT: TOLT BRIDGE No 1834A
THIS DRAWING INCLUDES:
FOR: SNOHOMISH COUNTY OFFICIAL

DRAWN	CHK	DWG NUMBER
DJ	DSC	2707 - 273A
DATE 07/31/2006	DATE 09/10/2006	0

PRO DRAFT INC. PDI# 676 : PH:(604)589-6425
DRAWINGS PREPARED ON 3D-Xsteel File Name :- A [274.A]
Model Name: 725_102_TOLT_BRIDGE_541
Plot Date: 09/10/2006 12:20:39

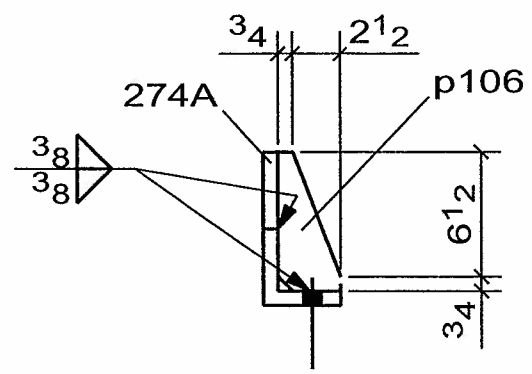

A - A

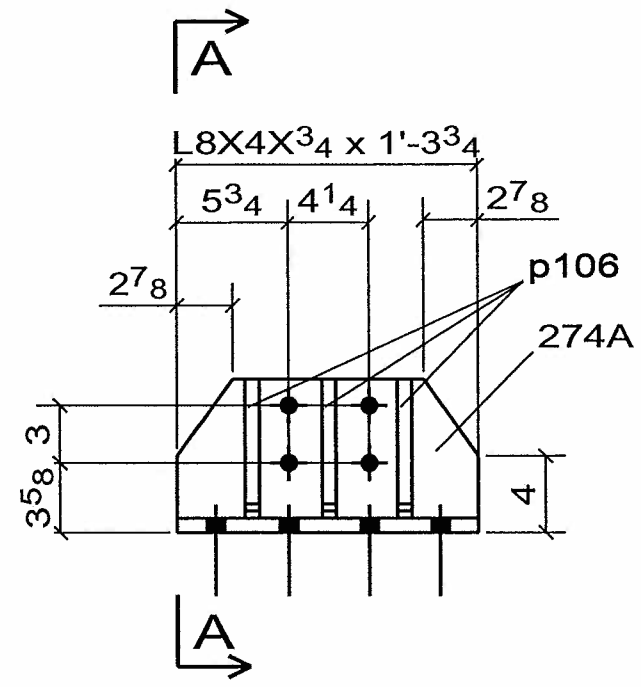

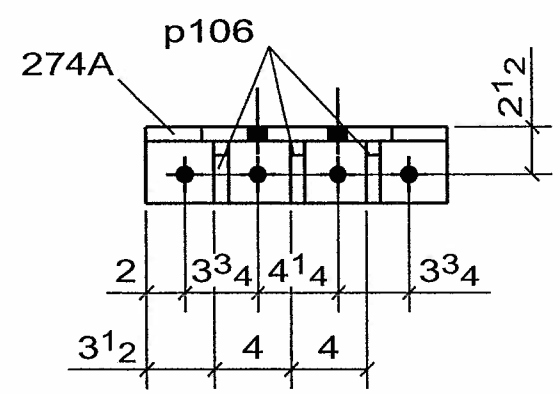

☒ CONFORMS TO DESIGN CONCEPT
☐ CONFORMS TO DESIGN CONCEPT WITH REVISIONS AS SHOWN
☐ NON-CONFORMING–REVISE & RESUBMIT

THIS SHOP DRAWING HAS BEEN REVIEWED FOR GENERAL CONFORMANCE WITH DESIGN CONCEPT ONLY AND DOES NOT RELIEVE THE FABRICATOR/VENDOR OF RESPONSIBLITY FOR CONFORMANCE WITH DESIGN DRAWINGS AND SPECIFICATIONS ALL OF WHICH HAVE PRIORITY OVER THIS SHOP DRAWING.

By A.F. Date 10-13-06

LIN & ASSOCIATES, INC.

WELD NOTE FOR ANY ASSEMBLY REQUIRING TACK WELDS:
- ALL TACK WELDS ARE TO BE MADE IN THE WELD JOINT ONLY

20 - CLIP_ANGLE -274A

No to SHIP	SHIP MARK	No PIECES	PIECE MARKS	DESCRIPTION	LENGTH	GRADE	REMARKS	WEIGHT	ADVANCE BILL
20	274A			CLIP_ANGLE				53	
		20	274A	L8X4X3/4	1'-3 3/4"	AASHTO M 270 GR. 50		38	
		60	p106	FB3/4X3 1/4	0'-7 1/4"	AASHTO M 270 GR. 50		5	

CONTRACTOR NOTE:
THIS DRAWING IS BEING SUBMITTED FOR APPROVAL AS REQUIRED. VERIFY OR SUPPLY ALL QUANTITIES, ALL DIMENSIONS, ALL INFORMATION, & ALL CONFIGURATIONS.

PRINT RECORD

NO.	USE	DATE
	APPR.	
	APPR.	
	PURCH	
	FAB	
	FAB. OFFICE	
	Q.A.	
	DIST.	
	ERECT.	

OPEN HOLES 15/16 Ø U/N
WELD BRIDGE WELDING CODE: D1.5
STEEL AS NOTED
BOLTS
SURFACE PREP-SP
PAINT SEE SPECS
REF.DRAWING E6, E7, E8, E9

REV	DATE	DESCRIPTION	
0	SEP/10/06	FOR APPROVAL	VS

RAINIER WELDING

19020 NE 84TH STREET - REDMOND, WA 98053
(425) 868-1300 FAX (425) 868-8872
STEEL AND ALUMINUM FABRICATING

PROJECT TOLT BRIDGE No 1834A
THIS DRAWING INCLUDES
FOR SNOHOMISH COUNTY OFFICIAL

DRAWN DJ DATE 07/31/2006 | CHK DSC DATE 09/10/2006 | DWG NUMBER 2707 - 274A | 0

PRO DRAFT INC. PDI# 676 : PH:(604)589-6425
DRAWINGS PREPARED ON 3D-Xsteel File Name :- A [275.A]
Model Name: 725_102_TOLT_BRIDGE_541
Plot Date: 09/10/2006 12:20:40

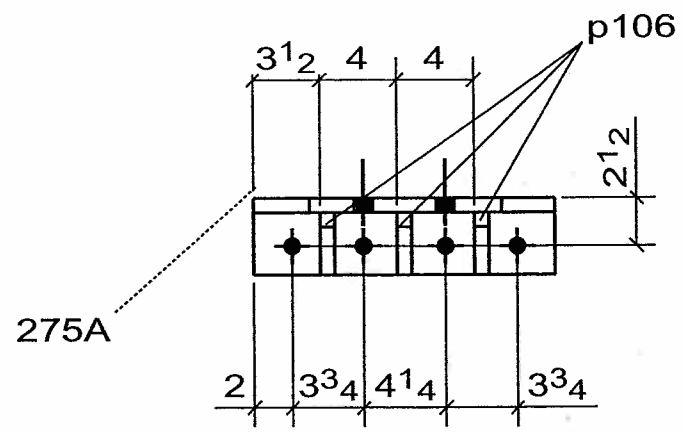

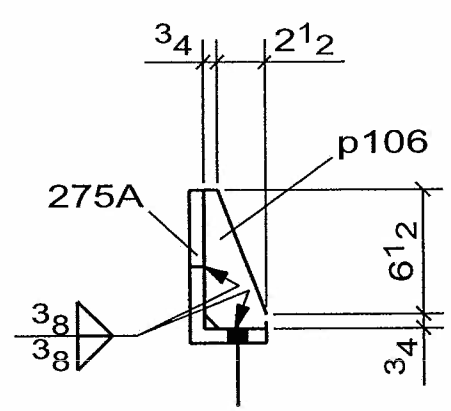

A - A

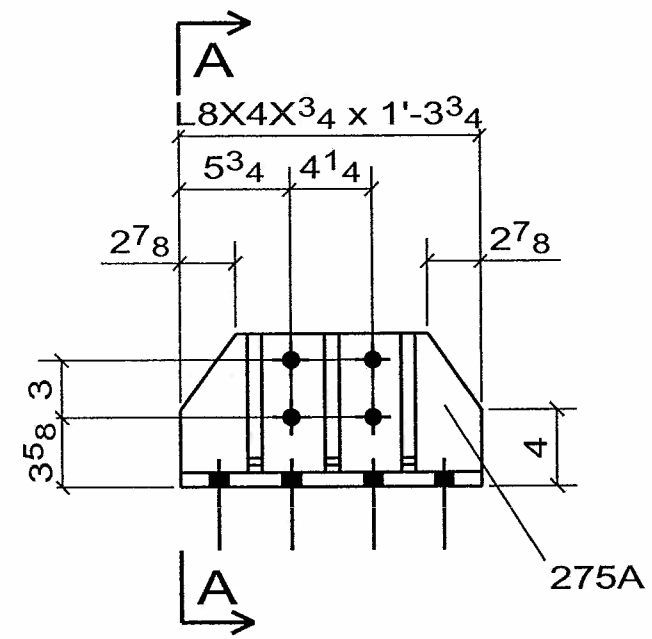

☒ CONFORMS TO DESIGN CONCEPT
☐ CONFORMS TO DESIGN CONCEPT WITH REVISIONS AS SHOWN
☐ NON-CONFORMING-REVISE & RESUBMIT

THIS SHOP DRAWING HAS BEEN REVIEWED FOR GENERAL CONFORMANCE WITH DESIGN CONCEPT ONLY AND DOES NOT RELIEVE THE FABRICATOR/VENDOR OF RESPONSIBLITY FOR CONFORMANCE WITH DESIGN DRAWINGS AND SPECIFICATIONS ALL OF WHICH HAVE PRIORITY OVER THIS SHOP DRAWING.

By A.F. Date 10-13-06

LIN & ASSOCIATES, INC.

WELD NOTE FOR ANY ASSEMBLY REQUIRING TACK WELDS:
- ALL TACK WELDS ARE TO BE MADE IN THE WELD JOINT ONLY

10 - CLIP_ANGLE -275A

No to SHIP	SHIP MARK	No PIECES	PIECE MARKS	DESCRIPTION	LENGTH	GRADE	REMARKS	WEIGHT	ADVANCE BILL
10	275A			CLIP_ANGLE				53	
		10	275A	L8X4X3/4	1'-3 3/4"	AASHTO M 270 GR. 50		38	
		30	p106	FB3/4X3 1/4	0'-7 1/4"	AASHTO M 270 GR. 50		5	

CONTRACTOR NOTE:
THIS DRAWING IS BEING SUBMITTED FOR APPROVAL AS REQUIRED. VERIFY OR SUPPLY ALL QUANTITIES, ALL DIMENSIONS, ALL INFORMATION, & ALL CONFIGURATIONS.

PRINT RECORD

NO.	USE	DATE
	APPR.	
	APPR.	
	PURCH	
	FAB	
	FAB. OFFICE	
	Q.A.	
	DIST.	
	ERECT.	

OPEN HOLES 15/16 Ø. U/N
WELD BRIDGE WELDING CODE: D1.5
STEEL AS NOTED
BOLTS
SURFACE PREP-SP
PAINT SEE SPECS
REF.DRAWING E6, E7, E8, E9

REV	DATE	DESCRIPTION	
0	SEP/10/06	FOR APPROVAL	VS

RAINIER WELDING

19020 NE 84TH STREET - REDMOND, WA 98053
(425) 868-1300 FAX (425) 868-8872
STEEL AND ALUMINUM FABRICATING

PROJECT TOLT BRIDGE No 1834A
THIS DRAWING INCLUDES
FOR SNOHOMISH COUNTY OFFICIAL

DRAWN DJ DATE 07/31/2006 CHK DSC DATE 09/10/2006 DWG NUMBER 2707 - 275A 0

PRO DRAFT INC. PDI# 676 : PH:(604)589-6425
DRAWINGS PREPARED ON 3D-Xsteel File Name :- A [276.A]
Model Name: 725_102_TOLT_BRIDGE_541
Plot Date: 09/10/2006 12:20:42

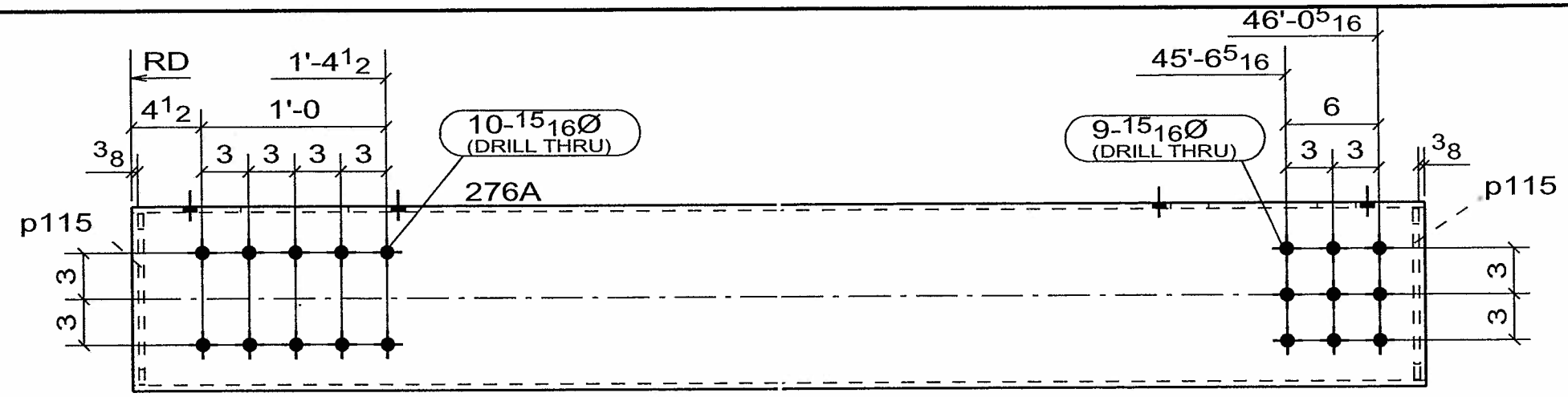

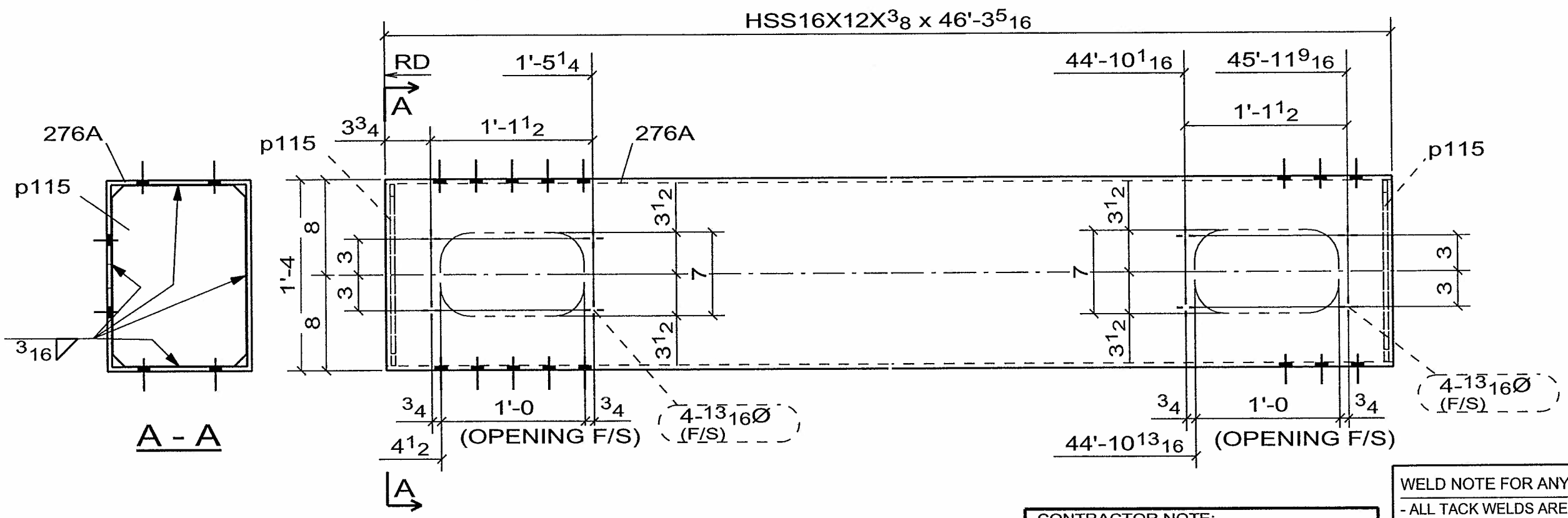

☒ CONFORMS TO DESIGN CONCEPT
☐ CONFORMS TO DESIGN CONCEPT WITH REVISIONS AS SHOWN
☐ NON-CONFORMING–REVISE & RESUBMIT
THIS SHOP DRAWING HAS BEEN REVIEWED FOR GENERAL CONFORMANCE WITH DESIGN CONCEPT ONLY AND DOES NOT RELIEVE THE FABRICATOR/VENDOR OF RESPONSIBILITY FOR CONFORMANCE WITH DESIGN DRAWINGS AND SPECIFICATIONS ALL OF WHICH HAVE PRIORITY OVER THIS SHOP DRAWING.
By A.F. Date 10-13-06
I.IN & ASSOCIATES, INC.

WELD NOTE FOR ANY ASSEMBLY REQUIRING TACK WELDS:
- ALL TACK WELDS ARE TO BE MADE IN THE WELD JOINT ONLY

4 - V_BRACE -276A

No to SHIP	SHIP MARK	No PIECES	PIECE MARKS	DESCRIPTION	LENGTH	GRADE	REMARKS	WEIGHT	ADVANCE BILL
4	276A			V_BRACE				2981	
		4	276A	HSS16X12X3/8	46'-3 5/16"	A500-GR.C	FCM/V	2945	
		8	p115	PL3/8X11 1/8	1'-3 3/16"	AASHTO M 270 GR. 50		18	

CONTRACTOR NOTE:
THIS DRAWING IS BEING SUBMITTED FOR APPROVAL AS REQUIRED. VERIFY OR SUPPLY ALL QUANTITIES, ALL DIMENSIONS, ALL INFORMATION, & ALL CONFIGURATIONS.

PRINT RECORD

NO.	USE	DATE
	APPR.	
	APPR.	
	PURCH	
	FAB	
	FAB. OFFICE	
	Q.A.	
	DIST.	
	ERECT.	

OPEN HOLES: 15/16 Ø U/N
WELD: BRIDGE WELDING CODE: D1.5
STEEL: AS NOTED
BOLTS:
SURFACE PREP-SP:
PAINT: SEE SPECS
REF.DRAWING: E6, E7, E8, E9

REV	DATE	DESCRIPTION	
0	SEP/10/06	FOR APPROVAL	VS

RAINIER WELDING

19020 NE 84TH STREET - REDMOND, WA 98053
(425) 868-1300 FAX (425) 868-8872
STEEL AND ALUMINUM FABRICATING

PROJECT: TOLT BRIDGE No 1834A
THIS DRAWING INCLUDES:
FOR: SNOHOMISH COUNTY OFFICIAL

DRAWN DJ DATE 07/31/2006 | CHK DSC DATE 09/10/2006 | DWG NUMBER 2707 - 276A | 0

PRO DRAFT INC. PDI# 676 : PH:(604)589-6425
DRAWINGS PREPARED ON 3D-Xsteel File Name :- A [277.A]
Model Name: 725_102_TOLT_BRIDGE_541
Plot Date: 09/10/2006 12:20:43

☒ CONFORMS TO DESIGN CONCEPT
☐ CONFORMS TO DESIGN CONCEPT WITH REVISIONS AS SHOWN
☐ NON-CONFORMING–REVISE & RESUBMIT
THIS SHOP DRAWING HAS BEEN REVIEWED FOR GENERAL CONFORMANCE WITH DESIGN CONCEPT ONLY AND DOES NOT RELIEVE THE FABRICATOR/VENDOR OF RESPONSIBLITY FOR CONFORMANCE WITH DESIGN DRAWINGS AND SPECIFICATIONS ALL OF WHICH ARE HELD OVER THIS SHOP DRAWING.
By A.F. Date 10-13-06
LIN & ASSOCIATES, INC.

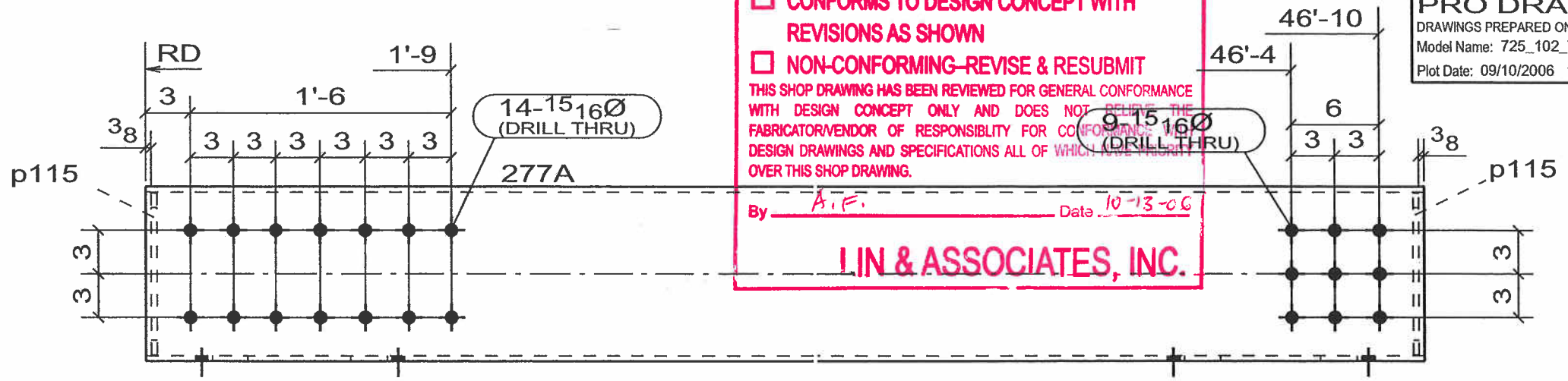

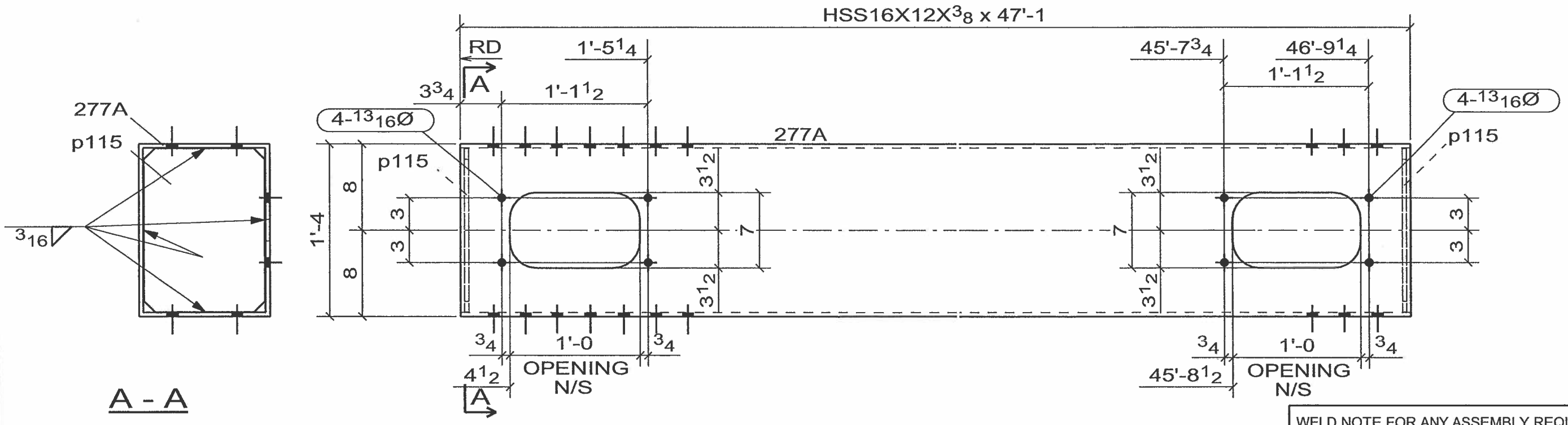

A - A

WELD NOTE FOR ANY ASSEMBLY REQUIRING TACK WELDS:
- ALL TACK WELDS ARE TO BE MADE IN THE WELD JOINT ONLY

CONTRACTOR NOTE:
THIS DRAWING IS BEING SUBMITTED FOR APPROVAL AS REQUIRED. VERIFY OR SUPPLY ALL QUANTITIES, ALL DIMENSIONS, ALL INFORMATION, & ALL CONFIGURATIONS.

PRINT RECORD

NO.	USE	DATE
	APPR.	
	APPR.	
	PURCH	
	FAB	
	FAB. OFFICE	
	Q.A.	
	DIST.	
	ERECT.	

OPEN HOLES: 15/16 Ø U/N
WELD: BRIDGE WELDING CODE: D1.5
STEEL: AS NOTED
BOLTS:
SURFACE PREP-SP:
PAINT: SEE SPECS
REF.DRAWING: E6, E9

REV	DATE	DESCRIPTION	
0	SEP/10/06	FOR APPROVAL	VS

RAINIER WELDING

19020 NE 84TH STREET - REDMOND, WA 98053
(425) 868-1300 FAX (425) 868-8872
STEEL AND ALUMINUM FABRICATING

PROJECT: TOLT BRIDGE No 1834A
THIS DRAWING INCLUDES:
FOR: SNOHOMISH COUNTY OFFICIAL
DRAWN DJ DATE 07/31/2006 CHK DSC DATE 09/10/2006 DWG NUMBER 2707 - 277A △0

2 - V_BRACE -277A

No to SHIP	SHIP MARK	No PIECES	PIECE MARKS	DESCRIPTION	LENGTH	GRADE	REMARKS	WEIGHT	ADVANCE BILL
2	277A			V_BRACE				3032	
		2	277A	HSS16X12X3/8	47'-1"	A500-GR.C	FCM/V	2996	
		4	p115	PL3/8X11 1/8	1'-3 3/16"	AASHTO M 270 GR. 50		18	

PRO DRAFT INC. PDI# 676 : PH:(604)589-6425
DRAWINGS PREPARED ON 3D-Xsteel File Name :- A [278.A]
Model Name: 725_102_TOLT_BRIDGE_541
Plot Date: 09/10/2006 12:20:44

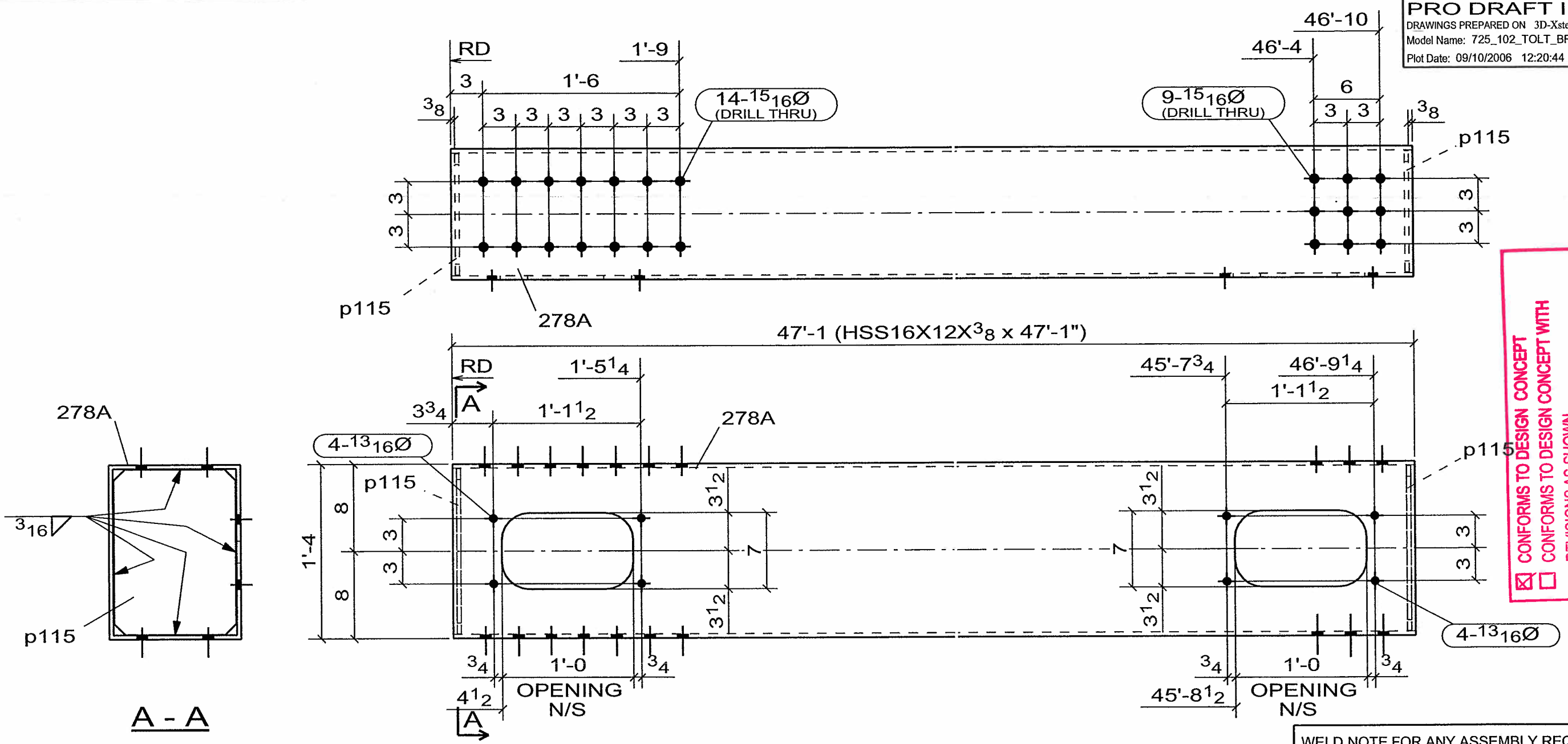

CONFORMS TO DESIGN CONCEPT
☐ CONFORMS TO DESIGN CONCEPT WITH REVISIONS AS SHOWN
☐ NON-CONFORMING-REVISE & RESUBMIT
THIS SHOP DRAWING HAS BEEN REVIEWED FOR GENERAL CONFORMANCE WITH DESIGN CONCEPT ONLY AND DOES NOT RELIEVE THE FABRICATOR/VENDOR OF RESPONSIBILITY FOR CONFORMANCE WITH DESIGN DRAWINGS AND SPECIFICATIONS ALL OF WHICH HAVE PRIORITY OVER THIS SHOP DRAWING.
By A.F. Date 10-13-06
I.IN & ASSOCIATES, INC.

WELD NOTE FOR ANY ASSEMBLY REQUIRING TACK WELDS:
- ALL TACK WELDS ARE TO BE MADE IN THE WELD JOINT ONLY

2 - V_BRACE -278A

No to SHIP	SHIP MARK	No PIECES	PIECE MARKS	DESCRIPTION	LENGTH	GRADE	REMARKS	WEIGHT	ADVANCE BILL
2	278A			V_BRACE				3032	
		2	278A	HSS16X12X3/8	47'-1"	A500-GR.C	FCM/V	2996	
		4	p115	PL3/8X11 1/8	1'-3 3/16"	AASHTO M 270 GR. 50		18	

CONTRACTOR NOTE:
THIS DRAWING IS BEING SUBMITTED FOR APPROVAL AS REQUIRED. VERIFY OR SUPPLY ALL QUANTITIES, ALL DIMENSIONS, ALL INFORMATION, & ALL CONFIGURATIONS.

PRINT RECORD

NO.	USE	DATE
	APPR.	
	APPR.	
	PURCH	
	FAB	
	FAB. OFFICE	
	Q.A.	
	DIST.	
	ERECT.	

OPEN HOLES 15/16 Ø U/N
WELD BRIDGE WELDING CODE: D1.5
STEEL AS NOTED
BOLTS
SURFACE PREP-SP
PAINT SEE SPECS
REF.DRAWING E7, E8

REV	DATE	DESCRIPTION	
0	SEP/10/06	FOR APPROVAL	VS

RAINIER WELDING

19020 NE 84TH STREET - REDMOND, WA 98053
(425) 868-1300 FAX (425) 868-8872
STEEL AND ALUMINUM FABRICATING

PROJECT TOLT BRIDGE No 1834A
THIS DRAWING INCLUDES
FOR SNOHOMISH COUNTY OFFICIAL

DRAWN DJ DATE 08/26/2006
CHK DSC DATE 09/10/2006
DWG NUMBER 2707 - 278A
0

☒ CONFORMS TO DESIGN CONCEPT
☐ CONFORMS TO DESIGN CONCEPT WITH REVISIONS AS SHOWN
☐ NON-CONFORMING–REVISE & RESUBMIT
THIS SHOP DRAWING HAS BEEN REVIEWED FOR GENERAL CONFORMANCE WITH DESIGN CONCEPT ONLY AND DOES NOT RELIEVE THE FABRICATOR/VENDOR OF RESPONSIBILITY FOR CONFORMANCE WITH DESIGN DRAWINGS AND SPECIFICATIONS ALL OF WHICH HAVE PRIORITY OVER THIS SHOP DRAWING.
By AF Date 10-13-06
LIN & ASSOCIATES, INC.

PRO DRAFT INC. PDI# 676 : PH:(604)589-6425
DRAWINGS PREPARED ON 3D-Xsteel File Name :- A [279.A]
Model Name: 725_102_TOLT_BRIDGE_541
Plot Date: 09/10/2006 12:20:46

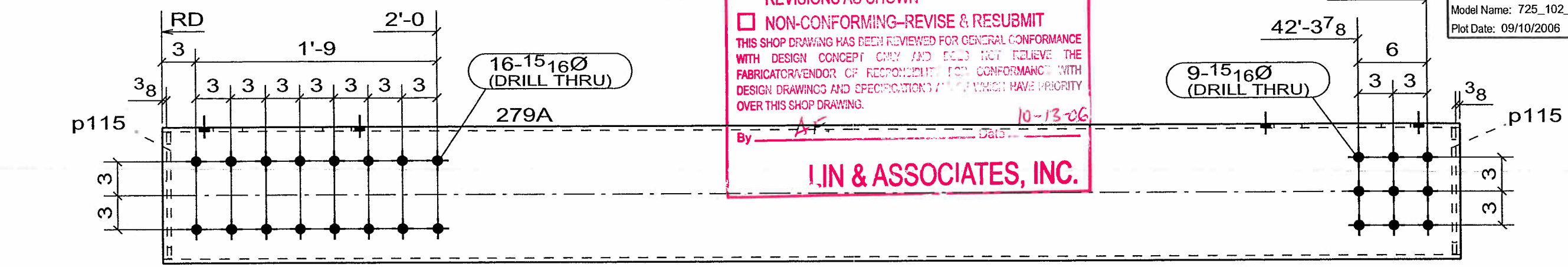

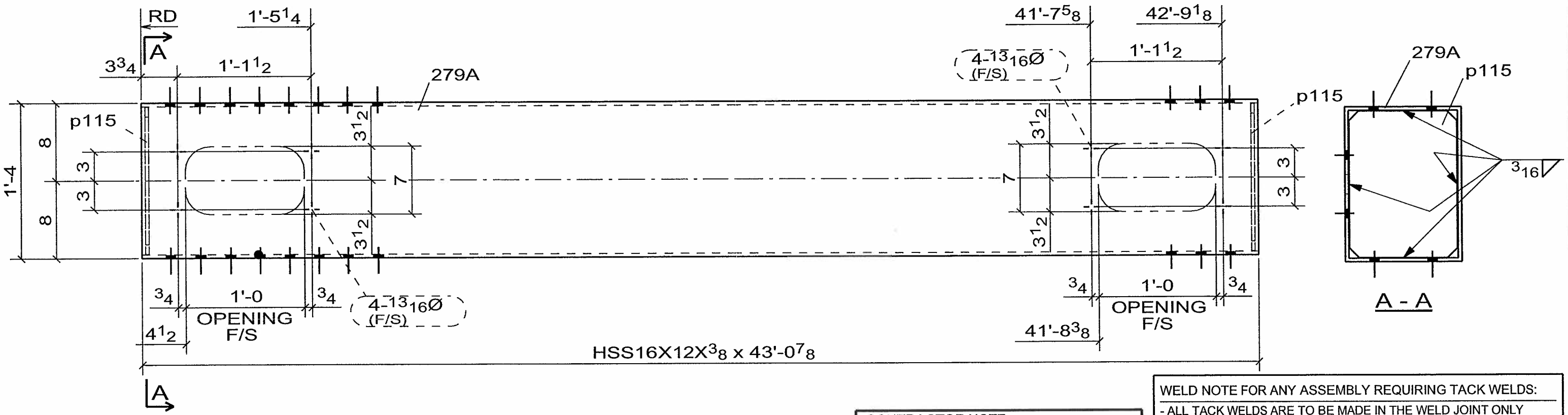

WELD NOTE FOR ANY ASSEMBLY REQUIRING TACK WELDS:
- ALL TACK WELDS ARE TO BE MADE IN THE WELD JOINT ONLY

CONTRACTOR NOTE:
THIS DRAWING IS BEING SUBMITTED FOR APPROVAL AS REQUIRED. VERIFY OR SUPPLY ALL QUANTITIES, ALL DIMENSIONS, ALL INFORMATION, & ALL CONFIGURATIONS.

PRINT RECORD

NO.	USE	DATE
	APPR.	
	APPR.	
	PURCH	
	FAB	
	FAB. OFFICE	
	Q.A.	
	DIST	
	ERECT.	

OPEN HOLES: 15/16 Ø U/N
WELD: BRIDGE WELDING CODE: D1.5
STEEL: AS NOTED
BOLTS:
SURFACE PREP-SP:
PAINT: SEE SPECS
REF.DRAWING: E6, E7, E8, E9

REV	DATE	DESCRIPTION	
0	SEP/10/06	FOR APPROVAL	VS

RAINIER WELDING

19020 NE 84TH STREET - REDMOND, WA 98053
(425) 868-1300 FAX (425) 868-8872
STEEL AND ALUMINUM FABRICATING

PROJECT: TOLT BRIDGE No 1834A
THIS DRAWING INCLUDES:
FOR: SNOHOMISH COUNTY OFFICIAL
DRAWN DJ DATE 07/28/2006 CHK DSC DATE 09/10/2006 DWG NUMBER 2707 - 279A △0

4 - V_BRACE -279A

No to SHIP	SHIP MARK	No PIECES	PIECE MARKS	DESCRIPTION	LENGTH	GRADE	REMARKS	WEIGHT	ADVANCE BILL
4	279A			V_BRACE				2777	
		4	279A	HSS16X12X3/8	43'-0 7/8"	A500-GR.C	FCM/V	2741	
		8	p115	PL3/8X11 1/8	1'-3 3/16"	AASHTO M 270 GR. 50		18	

PRO DRAFT INC. PDI# 676 : PH:(604)589-6425
DRAWINGS PREPARED ON 3D-Xsteel File Name :- A [280.A]
Model Name: 725_102_TOLT_BRIDGE_541
Plot Date: 09/10/2006 12:20:47

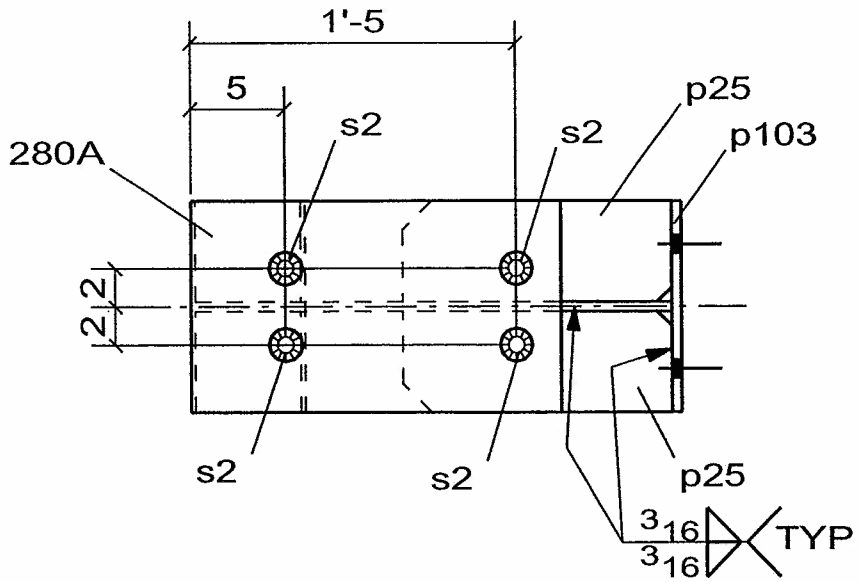

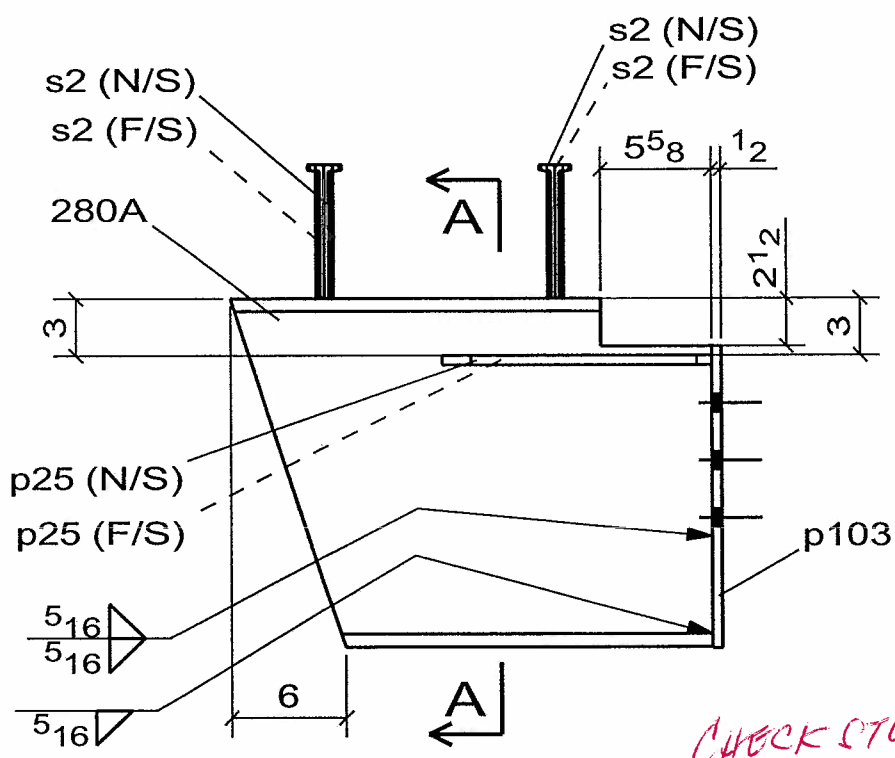

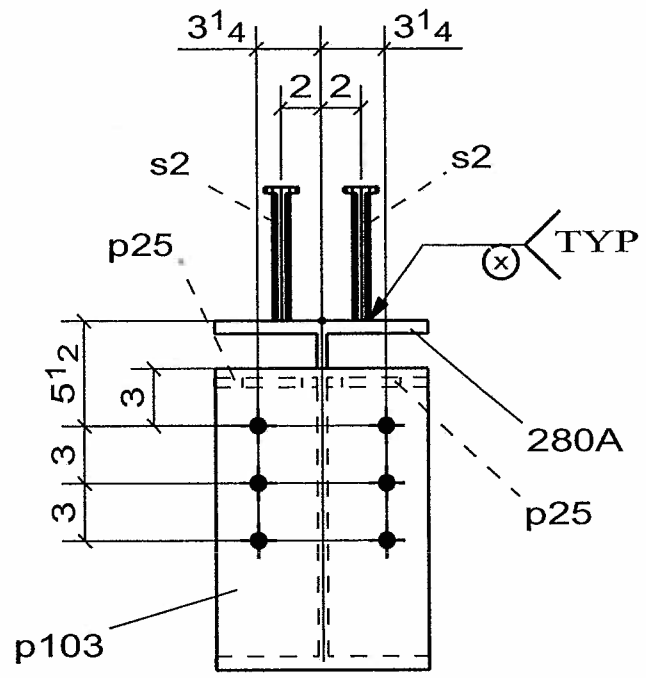

A - A

CHECK STUD LENGTH

8 - STRINGER -280A

No to SHIP	SHIP MARK	No PIECES	PIECE MARKS	DESCRIPTION	LENGTH	GRADE	REMARKS	WEIGHT	ADVANCE BILL
8	280A			STRINGER				209	
		8	280A	W18X76	2'-1 1/16"	AASHTO M 270 GR. 50		158	
		16	p25	PL1/2X5 1/4	1'-2"	AASHTO M 270 GR. 50		11	
		8	p103	FB1/2X11	1'-3 3/4"	AASHTO M 270 GR. 50		25	
		32	s2	STUD-7/8-DIA	0'-7"	A108		1	

CONTRACTOR NOTE:
THIS DRAWING IS BEING SUBMITTED FOR APPROVAL AS REQUIRED. VERIFY OR SUPPLY ALL QUANTITIES, ALL DIMENSIONS, ALL INFORMATION, & ALL CONFIGURATIONS.

PRINT RECORD

NO.	USE	DATE
	APPR.	
	APPR.	
	PURCH	
	FAB	
	FAB. OFFICE	
	Q.A.	
	DIST.	
	ERECT.	

OPEN HOLES: 15/16 Ø U/N
WELD: BRIDGE WELDING CODE: D1.5
STEEL: AS NOTED
BOLTS:
SURFACE PREP-SP:
PAINT: SEE SPECS
REF.DRAWING: E2, E3

☐ CONFORMS TO DESIGN CONCEPT
☒ CONFORMS TO DESIGN CONCEPT WITH REVISIONS AS SHOWN
☐ NON-CONFORMING-REVISE & RESUBMIT

THIS SHOP DRAWING HAS BEEN REVIEWED FOR GENERAL CONFORMANCE WITH DESIGN CONCEPT ONLY AND DOES NOT RELIEVE THE FABRICATOR/VENDOR OF RESPONSIBLITY FOR CONFORMANCE WITH DESIGN DRAWINGS AND SPECIFICATIONS ALL OF WHICH HAVE PRIORITY OVER THIS SHOP DRAWING.

By A.F. Date 10-13-06

LIN & ASSOCIATES, INC.

WELD NOTE FOR ANY ASSEMBLY REQUIRING TACK WELDS:
- ALL TACK WELDS ARE TO BE MADE IN THE WELD JOINT ONLY

REV	DATE	DESCRIPTION	
0	SEP/10/06	FOR APPROVAL	VS

RAINIER WELDING

19020 NE 84TH STREET - REDMOND, WA 98053
(425) 868-1300 FAX (425) 868-8872
STEEL AND ALUMINUM FABRICATING

PROJECT: TOLT BRIDGE No 1834A
THIS DRAWING INCLUDES:
FOR: SNOHOMISH COUNTY OFFICIAL

DRAWN DJ DATE 08/26/2006 | CHK DSC DATE 09/10/2006 | DWG NUMBER 2707 - 280A | 0

PRO DRAFT INC. PDI# 676 : PH:(604)589-6425
DRAWINGS PREPARED ON 3D-Xsteel File Name :- A [281.A]
Model Name: 725_102_TOLT_BRIDGE_541
Plot Date: 09/10/2006 12:20:48

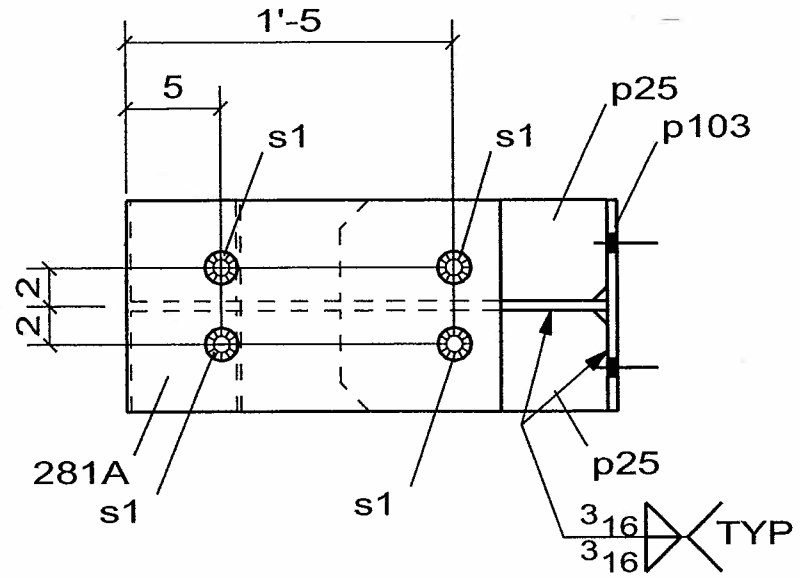

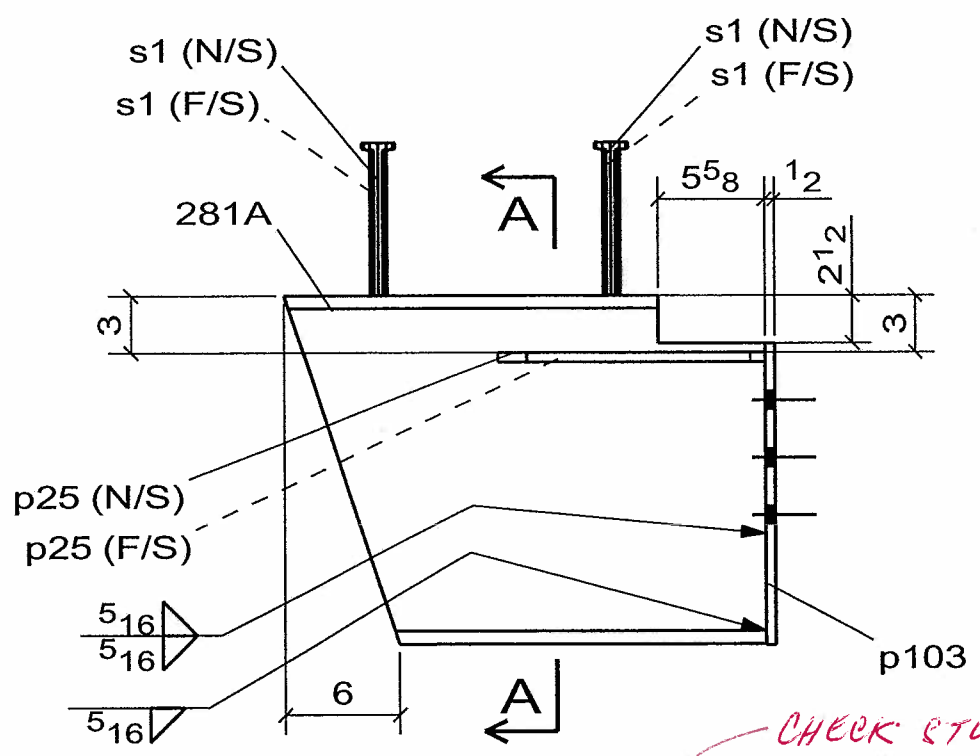

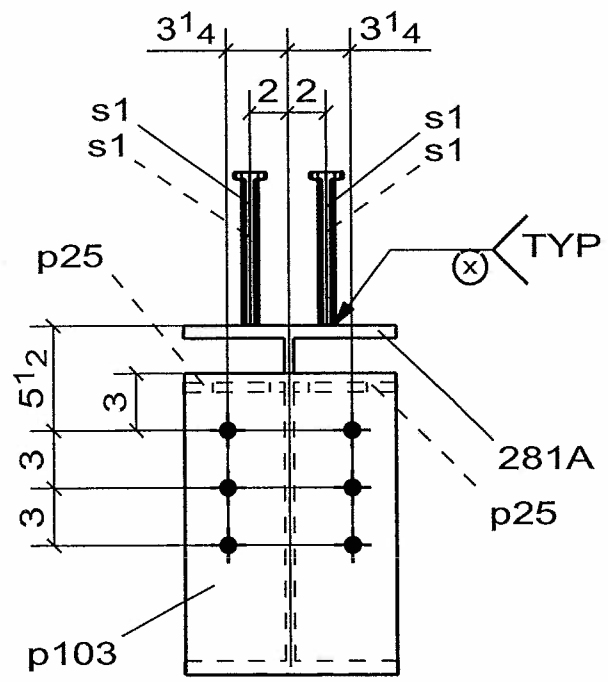

A - A

CHECK STUD LENGTH

4 - STRINGER -281A

No to SHIP	SHIP MARK	No PIECES	PIECE MARKS	DESCRIPTION	LENGTH	GRADE	REMARKS	WEIGHT	ADVANCE BILL
4	281A			STRINGER				210	
		4	281A	W18X76	2'-1 1/16"	AASHTO M 270 GR. 50		158	
		8	p25	PL1/2X5 1/4	1'-2"	AASHTO M 270 GR. 50		11	
		4	p103	FB1/2X11	1'-3 3/4"	AASHTO M 270 GR. 50		25	
		16	s1	STUD-7/8-DIA	0'-8"	A108		2	

CONTRACTOR NOTE:
THIS DRAWING IS BEING SUBMITTED FOR APPROVAL AS REQUIRED. VERIFY OR SUPPLY ALL QUANTITIES, ALL DIMENSIONS, ALL INFORMATION, & ALL CONFIGURATIONS.

PRINT RECORD

NO.	USE	DATE
	APPR.	
	APPR.	
	PURCH	
	FAB	
	FAB. OFFICE	
	Q.A.	
	DIST.	
	ERECT.	

OPEN HOLES 15/16 Ø U/N
WELD BRIDGE WELDING CODE: D1.5
STEEL AS NOTED
BOLTS
SURFACE PREP-SP
PAINT SEE SPECS
REF.DRAWING E2, E3

☐ CONFORMS TO DESIGN CONCEPT
☒ CONFORMS TO DESIGN CONCEPT WITH REVISIONS AS SHOWN
☐ NON-CONFORMING-REVISE & RESUBMIT

THIS SHOP DRAWING HAS BEEN REVIEWED FOR GENERAL CONFORMANCE WITH DESIGN CONCEPT ONLY AND DOES NOT RELIEVE THE FABRICATOR/VENDOR OF RESPONSIBLITY FOR CONFORMANCE WITH DESIGN DRAWINGS AND SPECIFICATIONS ALL OF WHICH HAVE PRIORITY OVER THIS SHOP DRAWING.

By A.F. Date 10-13-06

LIN & ASSOCIATES, INC.

WELD NOTE FOR ANY ASSEMBLY REQUIRING TACK WELDS:
- ALL TACK WELDS ARE TO BE MADE IN THE WELD JOINT ONLY

REV	DATE	DESCRIPTION	
0	SEP/10/06	FOR APPROVAL	VS

RAINIER WELDING

19020 NE 84TH STREET - REDMOND, WA 98053
(425) 868-1300 FAX (425) 868-8872
STEEL AND ALUMINUM FABRICATING

PROJECT TOLT BRIDGE No 1834A
THIS DRAWING INCLUDES
FOR SNOHOMISH COUNTY OFFICIAL

DRAWN DJ DATE 08/26/2006 CHK DSC DATE 09/10/2006 DWG NUMBER 2707 - 281A 0

PRO DRAFT INC. PDI# 676 : PH:(604)589-6425
DRAWINGS PREPARED ON 3D-Xsteel File Name :- A [282.A]
Model Name: 725_102_TOLT_BRIDGE_541
Plot Date: 09/10/2006 12:20:49

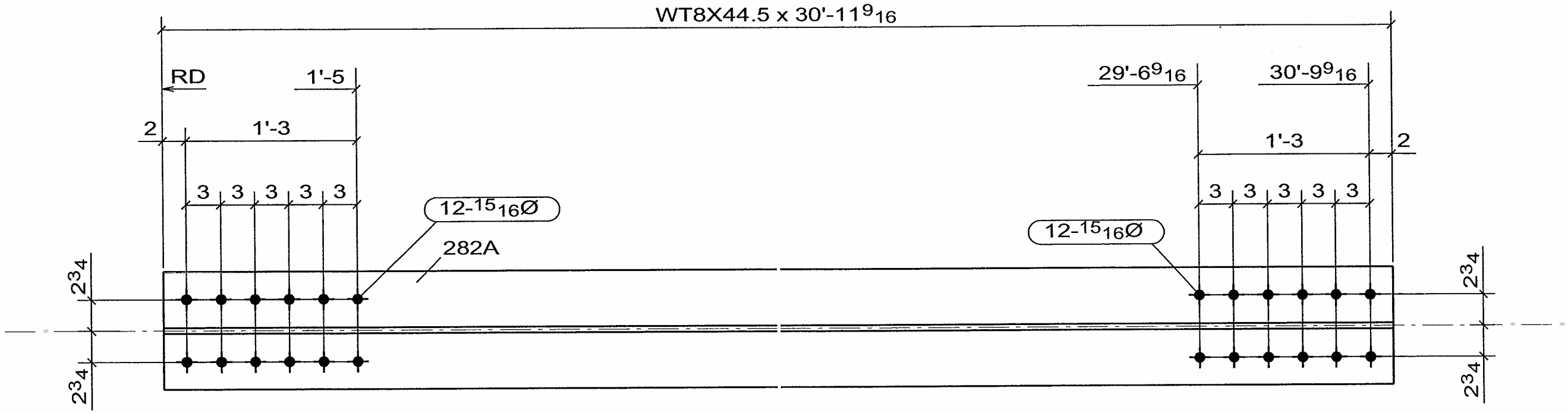

CONFORMS TO DESIGN CONCEPT
CONFORMS TO DESIGN CONCEPT WITH REVISIONS AS SHOWN
NON-CONFORMING–REVISE & RESUBMIT
THIS SHOP DRAWING HAS BEEN REVIEWED FOR GENERAL CONFORMANCE WITH DESIGN CONCEPT ONLY AND DOES NOT RELIEVE THE FABRICATOR/VENDOR OF RESPONSIBLITY FOR CONFORMANCE WITH DESIGN DRAWINGS AND SPECIFICATIONS ALL OF WHICH HAVE PRIORITY OVER THIS SHOP DRAWING.
By A. F. Date 10-13-06
LIN & ASSOCIATES, INC.

WELD NOTE FOR ANY ASSEMBLY REQUIRING TACK WELDS:
- ALL TACK WELDS ARE TO BE MADE IN THE WELD JOINT ONLY

CONTRACTOR NOTE:
THIS DRAWING IS BEING SUBMITTED FOR APPROVAL AS REQUIRED. VERIFY OR SUPPLY ALL QUANTITIES, ALL DIMENSIONS, ALL INFORMATION, & ALL CONFIGURATIONS.

PRINT RECORD

NO.	USE	DATE
	APPR.	
	APPR.	
	PURCH	
	FAB	
	FAB. OFFICE	
	Q.A.	
	DIST.	
	ERECT.	

OPEN HOLES 15/16 Ø U/N
WELD BRIDGE WELDING CODE: D1.5
STEEL AS NOTED
BOLTS
SURFACE PREP-SP
PAINT SEE SPECS
REF.DRAWING E2, E3

REV	DATE	DESCRIPTION	
0	SEP/10/06	FOR APPROVAL	VS

RAINIER WELDING

19020 NE 84TH STREET - REDMOND, WA 98053
(425) 868-1300 FAX (425) 868-8872
STEEL AND ALUMINUM FABRICATING

PROJECT TOLT BRIDGE No 1834A
THIS DRAWING INCLUDES
FOR SNOHOMISH COUNTY OFFICIAL
DRAWN DJ DATE 07/31/2006 CHK DSC DATE 09/10/2006 DWG NUMBER 2707 - 282A 0

8 - H_BRACE -282A

No to SHIP	SHIP MARK	No PIECES	PIECE MARKS	DESCRIPTION	LENGTH	GRADE	REMARKS	WEIGHT	ADVANCE BILL
8	282A			H_BRACE				1380	
		8	282A	WT8X44.5	30'-11 9/16"	AASHTO M 270 GR. 50		1380	

PRO DRAFT INC. PDI# 676 : PH:(604)589-6425
DRAWINGS PREPARED ON 3D-Xsteel File Name :- A [283.A]
Model Name: 725_102_TOLT_BRIDGE_541
Plot Date: 09/10/2006 12:20:50

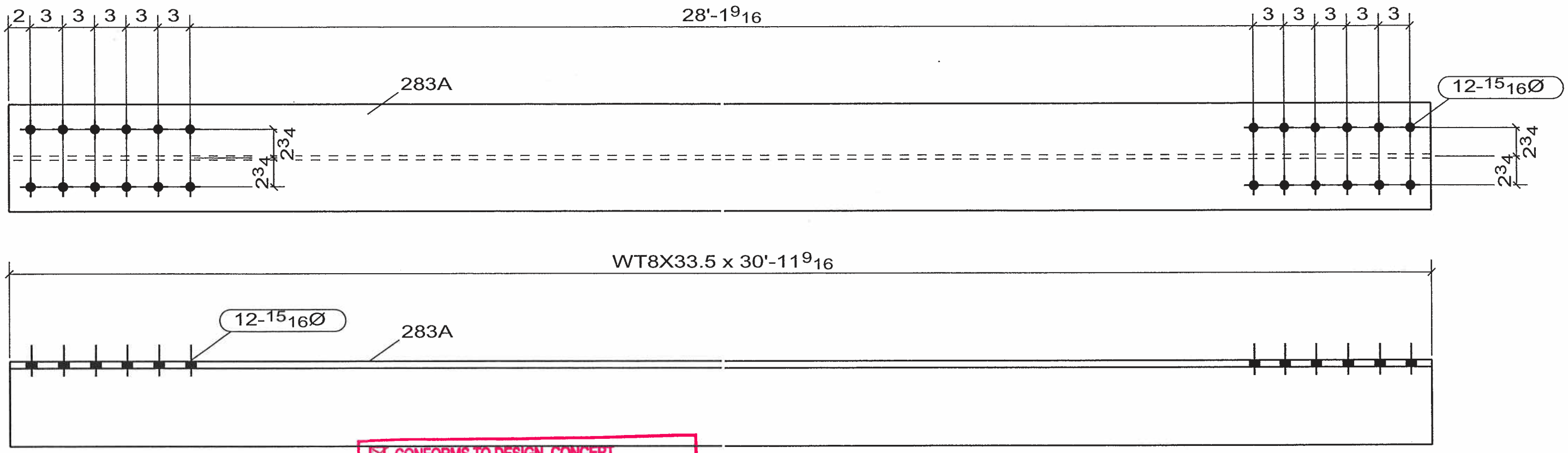

CONFORMS TO DESIGN CONCEPT
CONFORMS TO DESIGN CONCEPT WITH REVISIONS AS SHOWN
NON-CONFORMING-REVISE & RESUBMIT
THIS SHOP DRAWING HAS BEEN REVIEWED FOR GENERAL CONFORMANCE WITH DESIGN CONCEPT ONLY AND DOES NOT RELIEVE THE FABRICATOR/VENDOR OF RESPONSIBILITY FOR CONFORMANCE WITH DESIGN DRAWINGS AND SPECIFICATIONS ALL OF WHICH HAVE PRIORITY OVER THIS SHOP DRAWING.
By A.F. Date 10-13-06
LIN & ASSOCIATES, INC.

WELD NOTE FOR ANY ASSEMBLY REQUIRING TACK WELDS:
- ALL TACK WELDS ARE TO BE MADE IN THE WELD JOINT ONLY

CONTRACTOR NOTE:
THIS DRAWING IS BEING SUBMITTED FOR APPROVAL AS REQUIRED. VERIFY OR SUPPLY ALL QUANTITIES, ALL DIMENSIONS, ALL INFORMATION, & ALL CONFIGURATIONS.

PRINT RECORD			OPEN HOLES 15/16 Ø U/N
NO.	USE	DATE	WELD BRIDGE WELDING CODE: D1.5
	APPR.		STEEL AS NOTED
	APPR.		BOLTS
	PURCH		SURFACE PREP-SP
	FAB		PAINT SEE SPECS
	FAB. OFFICE		REF.DRAWING E2, E3
	Q.A.		
	DIST.		
	ERECT.		

REV	DATE	DESCRIPTION	
0	SEP/10/06	FOR APPROVAL	VS

RAINIER WELDING

19020 NE 84TH STREET - REDMOND, WA 98053
(425) 868-1300 FAX (425) 868-8872
STEEL AND ALUMINUM FABRICATING

PROJECT TOLT BRIDGE No 1834A
THIS DRAWING INCLUDES
FOR SNOHOMISH COUNTY OFFICIAL

DRAWN DJ DATE 07/31/2006 | CHK DSC DATE 09/10/2006 | DWG NUMBER 2707 - 283A | 0

16 - H_BRACE -283A

No to SHIP	SHIP MARK	No PIECES	PIECE MARKS	DESCRIPTION	LENGTH	GRADE	REMARKS	WEIGHT	ADVANCE BILL
16	283A			H_BRACE				1037	
		16	283A	WT8X33.5	30'-11 9/16"	AASHTO M 270 GR. 50		1037	

PRO DRAFT INC. PDI# 676 : PH:(604)589-6425
DRAWINGS PREPARED ON 3D-Xsteel File Name :- A [289.A]
Model Name: 725_102_TOLT_BRIDGE_541
Plot Date: 09/10/2006 12:20:51

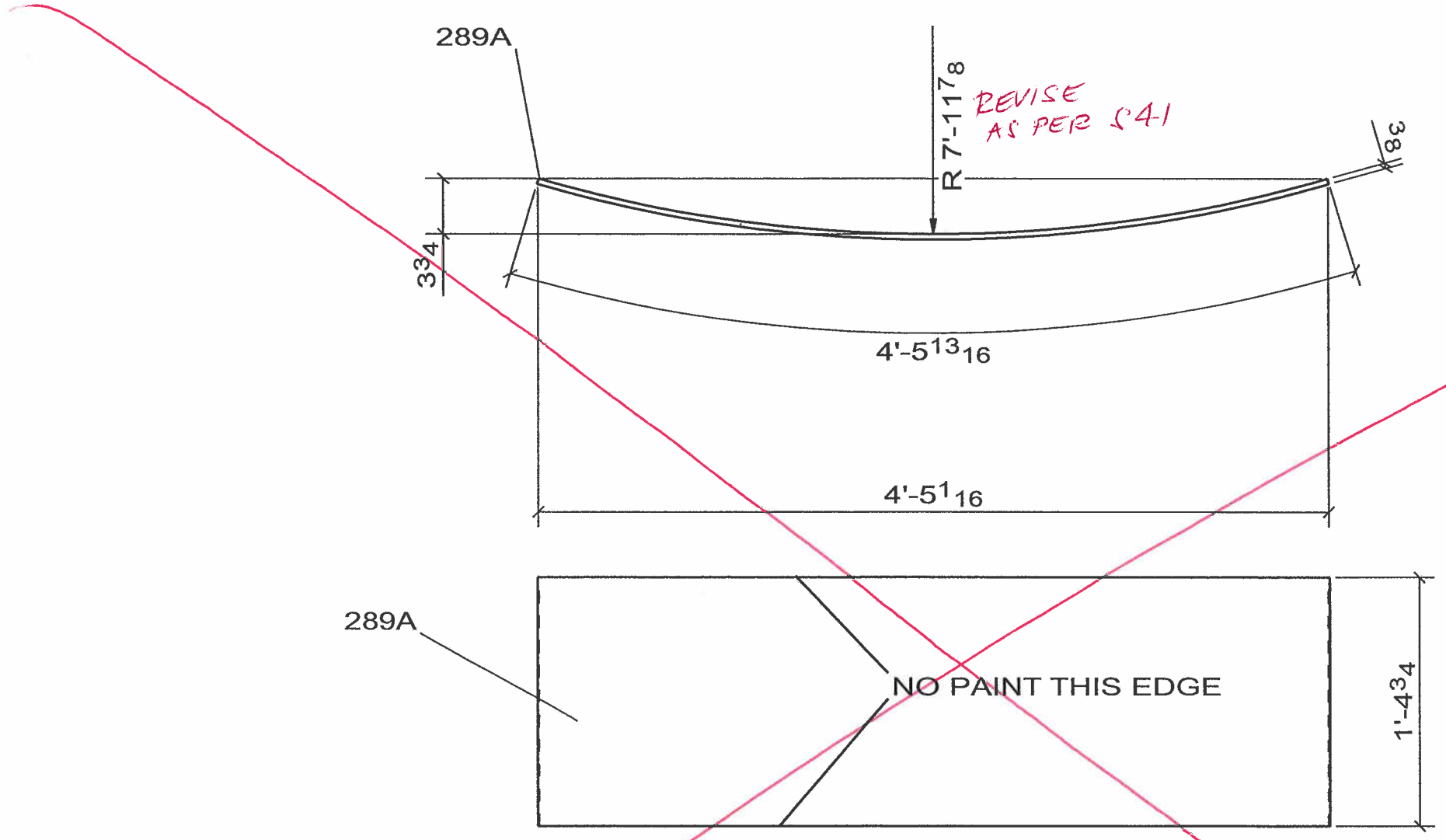

DELETED PER KC BRIDGE UNIT

☐ CONFORMS TO DESIGN CONCEPT
☒ CONFORMS TO DESIGN CONCEPT WITH REVISIONS AS SHOWN
☐ NON-CONFORMING-REVISE & RESUBMIT

THIS SHOP DRAWING HAS BEEN REVIEWED FOR GENERAL CONFORMANCE WITH DESIGN CONCEPT ONLY AND DOES NOT RELIEVE THE FABRICATOR/VENDOR OF RESPONSIBILITY FOR CONFORMANCE WITH DESIGN DRAWINGS AND SPECIFICATIONS ALL OF WHICH HAVE PRIORITY OVER THIS SHOP DRAWING.

By A.F. Date 10/13/06

LIN & ASSOCIATES, INC.

WELD NOTE FOR ANY ASSEMBLY REQUIRING TACK WELDS:
- ALL TACK WELDS ARE TO BE MADE IN THE WELD JOINT ONLY

CONTRACTOR NOTE:
THIS DRAWING IS BEING SUBMITTED FOR APPROVAL AS REQUIRED. VERIFY OR SUPPLY ALL QUANTITIES, ALL DIMENSIONS, ALL INFORMATION, & ALL CONFIGURATIONS.

PRINT RECORD

NO.	USE	DATE
	APPR.	
	APPR.	
	PURCH	
	FAB	
	FAB. OFFICE	
	Q.A.	
	DIST.	
	ERECT	

OPEN HOLES: 15/16 Ø U/N
WELD: BRIDGE WELDING CODE: D1.5
STEEL: AS NOTED
BOLTS:
SURFACE PREP-SP:
PAINT: SEE SPECS
REF.DRAWING: E10

REV	DATE	DESCRIPTION	
0	SEP/10/06	FOR APPROVAL	VS

RAINIER WELDING

19020 NE 84TH STREET - REDMOND, WA 98053
(425) 868-1300 FAX (425) 868-8872
STEEL AND ALUMINUM FABRICATING

PROJECT: TOLT BRIDGE No 1834A
THIS DRAWING INCLUDES:
FOR: SNOHOMISH COUNTY OFFICIAL

DRAWN DJ DATE 07/31/2006 | CHK DSC DATE 09/10/2006 | DWG NUMBER 2707 - 289A | 0

4 - COVER_PLATE -289A

No to SHIP	SHIP MARK	No PIECES	PIECE MARKS	DESCRIPTION	LENGTH	GRADE	REMARKS	WEIGHT	ADVANCE BILL
4	289A			COVER_PLATE				96	
		4	289A	PL3/8X16 3/4 ROLLED	4'-5 3/4"	AASHTO M 270 GR. 50		96	

PRO DRAFT INC. PDI# 676 : PH:(604)589-6425
DRAWINGS PREPARED ON 3D-Xsteel File Name :- A [290.A]
Model Name: 725_102_TOLT_BRIDGE_541
Plot Date: 09/10/2006 12:20:52

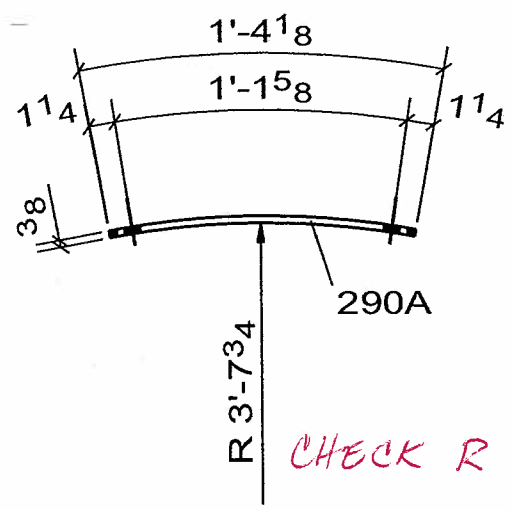

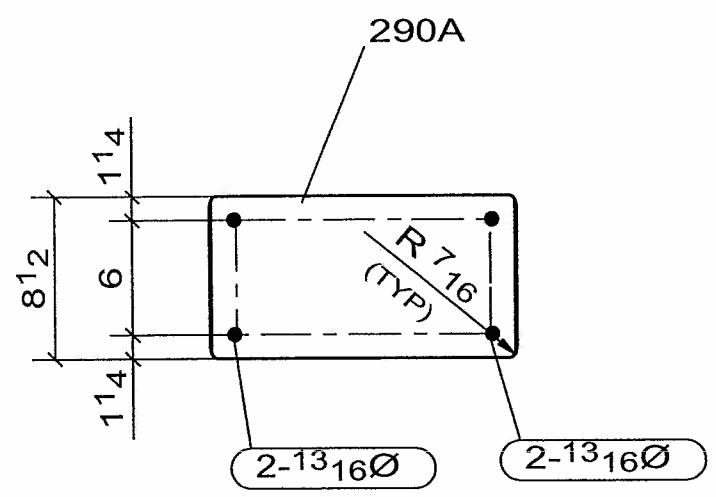

☐ CONFORMS TO DESIGN CONCEPT
☒ CONFORMS TO DESIGN CONCEPT WITH REVISIONS AS SHOWN
☐ NON-CONFORMING–REVISE & RESUBMIT

THIS SHOP DRAWING HAS BEEN REVIEWED FOR GENERAL CONFORMANCE WITH DESIGN CONCEPT ONLY AND DOES NOT RELIEVE THE FABRICATOR/VENDOR OF RESPONSIBLITY FOR CONFORMANCE WITH DESIGN DRAWINGS AND SPECIFICATIONS ALL OF WHICH HAVE PRIORITY OVER THIS SHOP DRAWING.

By A.F. Date 10/13/06

LIN & ASSOCIATES, INC.

WELD NOTE FOR ANY ASSEMBLY REQUIRING TACK WELDS:
- ALL TACK WELDS ARE TO BE MADE IN THE WELD JOINT ONLY

CONTRACTOR NOTE:
THIS DRAWING IS BEING SUBMITTED FOR APPROVAL AS REQUIRED. VERIFY OR SUPPLY ALL QUANTITIES, ALL DIMENSIONS, ALL INFORMATION, & ALL CONFIGURATIONS.

PRINT RECORD			
			OPEN HOLES 15/16 Ø U/N
NO.	USE	DATE	WELD BRIDGE WELDING CODE: D1.5
	APPR.		STEEL AS NOTED
	APPR.		BOLTS
	PURCH		SURFACE PREP-SP
	FAB		PAINT SEE SPECS
	FAB. OFFICE		REF.DRAWING E10
	Q.A.		
	DIST.		
	ERECT.		

REV	DATE	DESCRIPTION	
0	SEP/10/06	FOR APPROVAL	VS

RAINIER WELDING

19020 NE 84TH STREET - REDMOND, WA 98053
(425) 868-1300 FAX (425) 868-8872
STEEL AND ALUMINUM FABRICATING

PROJECT TOLT BRIDGE No 1834A
THIS DRAWING INCLUDES
FOR SNOHOMISH COUNTY OFFICIAL

DRAWN DJ DATE 07/31/2006 CHK DSC DATE 09/10/2006 DWG NUMBER 2707 - 290A △0

4 - COVER_PL - 290A

No to SHIP	SHIP MARK	No PIECES	PIECE MARKS	DESCRIPTION	LENGTH	GRADE	REMARKS	WEIGHT	ADVANCE BILL
4	290A			COVER_PL				15	
		4	290A	FB3/8X8 1/2	1'-4 1/16"	AASHTO M 270 GR. 50		15	

PRO DRAFT INC. PDI# 676 : PH:(604)589-6425
DRAWINGS PREPARED ON 3D-Xsteel File Name :- A [291.A]
Model Name: 725_102_TOLT_BRIDGE_541
Plot Date: 09/10/2006 12:20:52

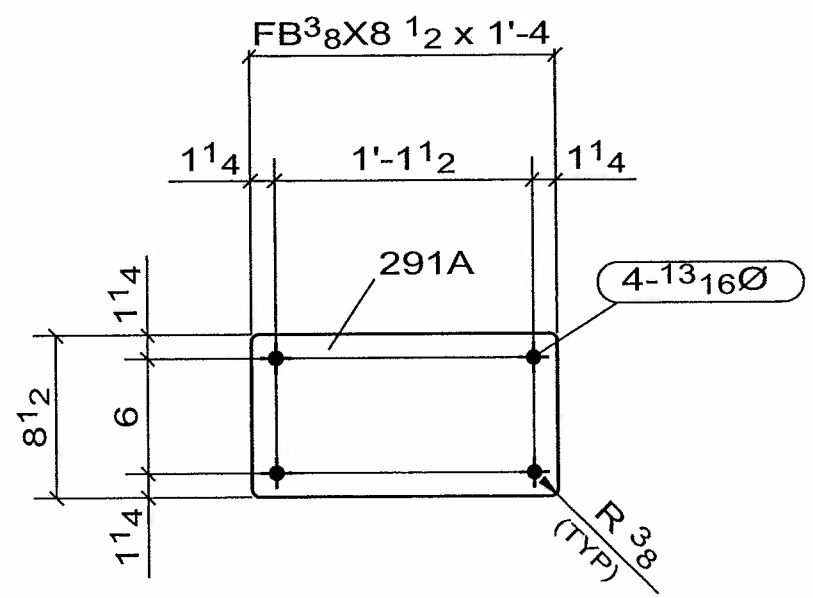

☒ CONFORMS TO DESIGN CONCEPT
☐ CONFORMS TO DESIGN CONCEPT WITH REVISIONS AS SHOWN
☐ NON-CONFORMING–REVISE & RESUBMIT

THIS SHOP DRAWING HAS BEEN REVIEWED FOR GENERAL CONFORMANCE WITH DESIGN CONCEPT ONLY AND DOES NOT RELIEVE THE FABRICATOR/VENDOR OF RESPONSIBLITY FOR CONFORMANCE WITH DESIGN DRAWINGS AND SPECIFICATIONS ALL OF WHICH HAVE PRIORITY OVER THIS SHOP DRAWING.

By A.F. Date 10-13-06

LIN & ASSOCIATES, INC.

WELD NOTE FOR ANY ASSEMBLY REQUIRING TACK WELDS:
- ALL TACK WELDS ARE TO BE MADE IN THE WELD JOINT ONLY

CONTRACTOR NOTE:
THIS DRAWING IS BEING SUBMITTED FOR APPROVAL AS REQUIRED. VERIFY OR SUPPLY ALL QUANTITIES, ALL DIMENSIONS, ALL INFORMATION, & ALL CONFIGURATIONS.

PRINT RECORD

NO.	USE	DATE
	APPR.	
	APPR.	
	PURCH	
	FAB	
	FAB. OFFICE	
	Q.A.	
	DIST.	
	ERECT.	

OPEN HOLES: 15/16 Ø U/N
WELD: BRIDGE WELDING CODE: D1.5
STEEL: AS NOTED
BOLTS:
SURFACE PREP-SP:
PAINT: SEE SPECS
REF.DRAWING: E4 TO E10

REV	DATE	DESCRIPTION	
0	SEP/10/06	FOR APPROVAL	VS

RAINIER WELDING

19020 NE 84TH STREET - REDMOND, WA 98053
(425) 868-1300 FAX (425) 868-8872
STEEL AND ALUMINUM FABRICATING

PROJECT: TOLT BRIDGE No 1834A
THIS DRAWING INCLUDES:
FOR: SNOHOMISH COUNTY OFFICIAL

DRAWN DJ DATE 07/31/2006 | CHK DSC DATE 09/10/2006 | DWG NUMBER 2707 - 291A | 0

304 - COVER_PL -291A

No to SHIP	SHIP MARK	No PIECES	PIECE_ MARKS	DESCRIPTION	LENGTH	GRADE	REMARKS	WEIGHT	ADVANCE BILL
304	291A			COVER_PL				14	
		304	291A	FB3/8X8 1/2	1'-4"	AASHTO M 270 GR. 50		14	

PRO DRAFT INC. PDI# 676 : PH:(604)589-6425
DRAWINGS PREPARED ON 3D-Xsteel File Name :- A [292.A]
Model Name: 725_102_TOLT_BRIDGE_541
Plot Date: 09/10/2006 12:20:53

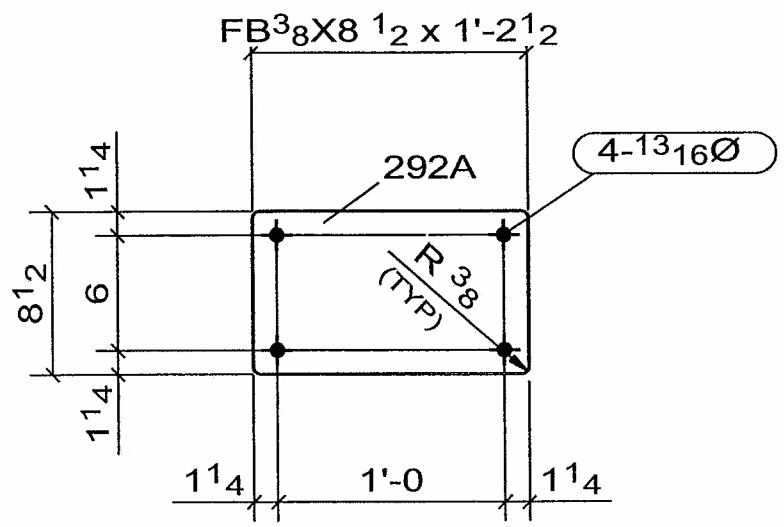

CONFORMS TO DESIGN CONCEPT
CONFORMS TO DESIGN CONCEPT WITH REVISIONS AS SHOWN
NON-CONFORMING–REVISE & RESUBMIT
THIS SHOP DRAWING HAS BEEN REVIEWED FOR GENERAL CONFORMANCE WITH DESIGN CONCEPT ONLY AND DOES NOT RELIEVE THE FABRICATOR/VENDOR OF RESPONSIBLITY FOR CONFORMANCE WITH DESIGN DRAWINGS AND SPECIFICATIONS ALL OF WHICH HAVE PRIORITY OVER THIS SHOP DRAWING.
By A.F. Date 10-13-06
LIN & ASSOCIATES, INC.

WELD NOTE FOR ANY ASSEMBLY REQUIRING TACK WELDS:
- ALL TACK WELDS ARE TO BE MADE IN THE WELD JOINT ONLY

2 - COVER_PL - 292A

No to SHIP	SHIP MARK	No PIECES	PIECE MARKS	DESCRIPTION	LENGTH	GRADE	REMARKS	WEIGHT	ADVANCE BILL
2	292A			COVER_PL				13	
		2	292A	FB3/8X8 1/2	1'-2 1/2"	AASHTO M 270 GR. 50		13	

CONTRACTOR NOTE:
THIS DRAWING IS BEING SUBMITTED FOR APPROVAL AS REQUIRED. VERIFY OR SUPPLY ALL QUANTITIES, ALL DIMENSIONS, ALL INFORMATION, & ALL CONFIGURATIONS.

PRINT RECORD

NO.	USE	DATE
	APPR.	
	APPR.	
	PURCH	
	FAB	
	FAB. OFFICE	
	Q.A.	
	DIST.	
	ERECT.	

OPEN HOLES 15/16 Ø U/N
WELD BRIDGE WELDING CODE: D1.5
STEEL AS NOTED
BOLTS
SURFACE PREP-SP
PAINT SEE SPECS
REF.DRAWING E6, E8

REV	DATE	DESCRIPTION	
0	SEP/10/06	FOR APPROVAL	VS

RAINIER WELDING

19020 NE 84TH STREET - REDMOND, WA 98053
(425) 868-1300 FAX (425) 868-8872
STEEL AND ALUMINUM FABRICATING

PROJECT TOLT BRIDGE No 1834A
THIS DRAWING INCLUDES
FOR SNOHOMISH COUNTY OFFICIAL
DRAWN DJ DATE 07/31/2006
CHK DSC DATE 09/10/2006
DWG NUMBER 2707 - 292A
0

PRO DRAFT INC. PDI# 676 : PH:(604)589-6425
DRAWINGS PREPARED ON 3D-Xsteel File Name :- A [293.A]
Model Name: 725_102_TOLT_BRIDGE_541
Plot Date: 09/10/2006 12:20:54

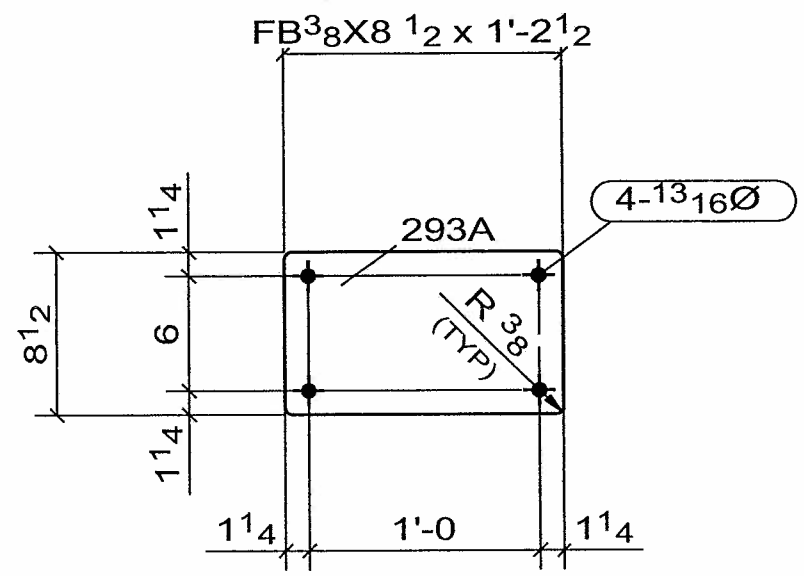

☒ CONFORMS TO DESIGN CONCEPT
☐ CONFORMS TO DESIGN CONCEPT WITH REVISIONS AS SHOWN
☐ NON-CONFORMING–REVISE & RESUBMIT

THIS SHOP DRAWING HAS BEEN REVIEWED FOR GENERAL CONFORMANCE WITH DESIGN CONCEPT ONLY AND DOES NOT RELIEVE THE FABRICATOR/VENDOR OF RESPONSIBLITY FOR CONFORMANCE WITH DESIGN DRAWINGS AND SPECIFICATIONS ALL OF WHICH HAVE PRIORITY OVER THIS SHOP DRAWING.

By A.F. Date 10-13-06

LIN & ASSOCIATES, INC.

WELD NOTE FOR ANY ASSEMBLY REQUIRING TACK WELDS:
- ALL TACK WELDS ARE TO BE MADE IN THE WELD JOINT ONLY

2 - COVER_PL -293A

No to SHIP	SHIP MARK	No PIECES	PIECE MARKS	DESCRIPTION	LENGTH	GRADE	REMARKS	WEIGHT	ADVANCE BILL
2	293A			COVER_PL				13	
		2	293A	FB3/8X8 1/2	1'-2 1/2"	AASHTO M 270 GR. 50		13	

CONTRACTOR NOTE:
THIS DRAWING IS BEING SUBMITTED FOR APPROVAL AS REQUIRED. VERIFY OR SUPPLY ALL QUANTITIES, ALL DIMENSIONS, ALL INFORMATION, & ALL CONFIGURATIONS.

PRINT RECORD

NO.	USE	DATE
	APPR.	
	APPR.	
	PURCH	
	FAB	
	FAB. OFFICE	
	Q.A.	
	DIST.	
	ERECT.	

OPEN HOLES: 15/16 Ø U/N
WELD: BRIDGE WELDING CODE: D1.5
STEEL: AS NOTED
BOLTS:
SURFACE PREP-SP:
PAINT: SEE SPECS
REF.DRAWING: E7, E9

REV	DATE	DESCRIPTION	
0	SEP/10/06	FOR APPROVAL	VS

RAINIER WELDING

19020 NE 84TH STREET - REDMOND, WA 98053
(425) 868-1300 FAX (425) 868-8872
STEEL AND ALUMINUM FABRICATING

PROJECT: TOLT BRIDGE No 1834A
THIS DRAWING INCLUDES:
FOR: SNOHOMISH COUNTY OFFICIAL

DRAWN DJ DATE 07/31/2006
CHK DSC DATE 09/10/2006
DWG NUMBER 2707 - 293A 0

PRO DRAFT INC. PDI# 676 PH:(604)589-6425
DRAWINGS PREPARED ON 3D-Xsteel File Name :- A [294.A]
Model Name: 725_102_TOLT_BRIDGE_541
Plot Date: 09/10/2006 12:20:55

☐ ~~CONFORMS TO DESIGN CONCEPT~~
☒ CONFORMS TO DESIGN CONCEPT WITH REVISIONS AS SHOWN
☐ NON-CONFORMING–REVISE & RESUBMIT
THIS SHOP DRAWING HAS BEEN REVIEWED FOR GENERAL CONFORMANCE WITH DESIGN CONCEPT ONLY AND DOES NOT RELIEVE THE FABRICATOR/VENDOR OF RESPONSIBLITY FOR CONFORMANCE WITH DESIGN DRAWINGS AND SPECIFICATIONS ALL OF WHICH HAVE PRIORITY OVER THIS SHOP DRAWING.
By A.R. Date 10/13/06
LIN & ASSOCIATES, INC.

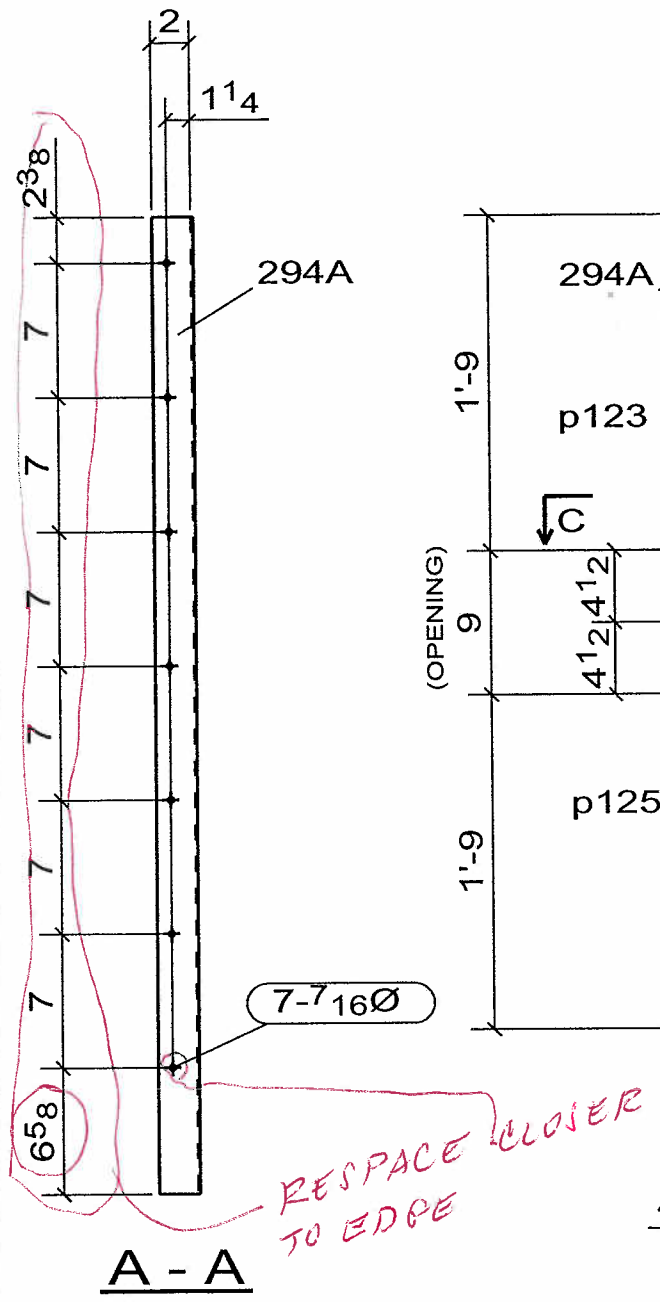

A - A

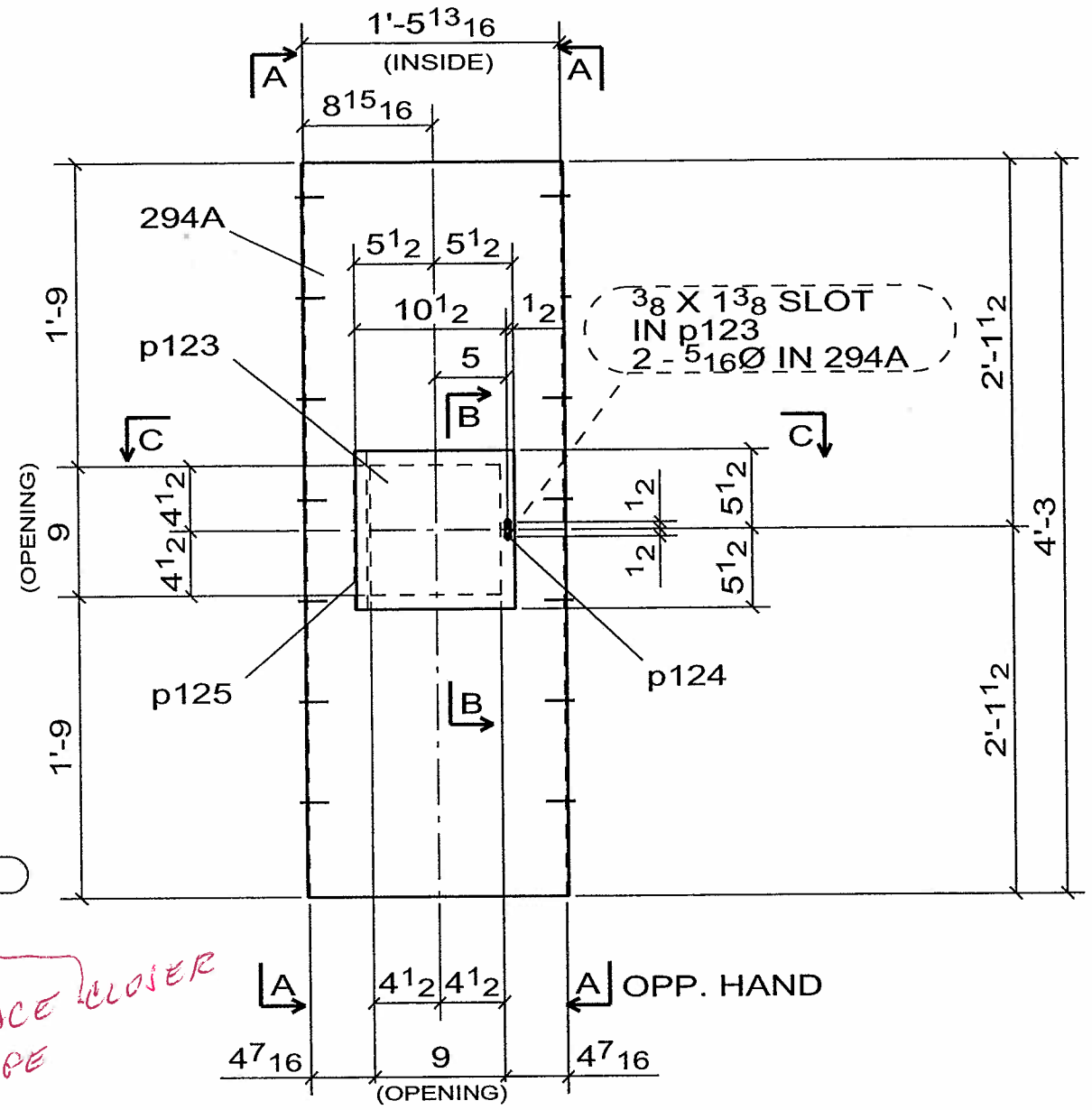

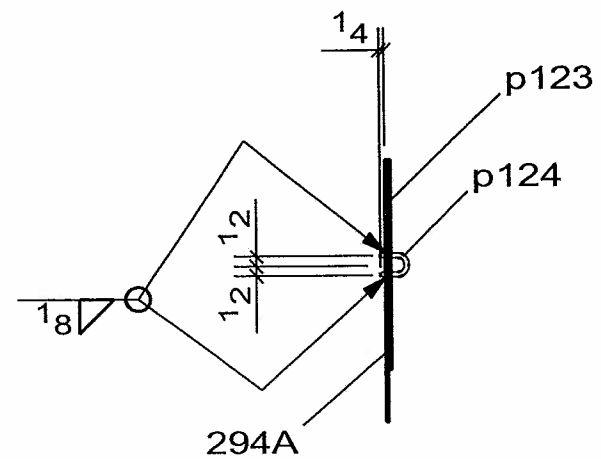

B - B

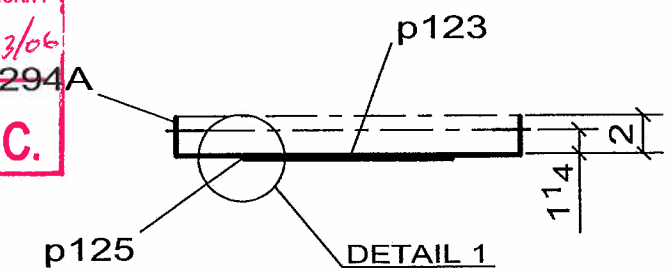

C - C

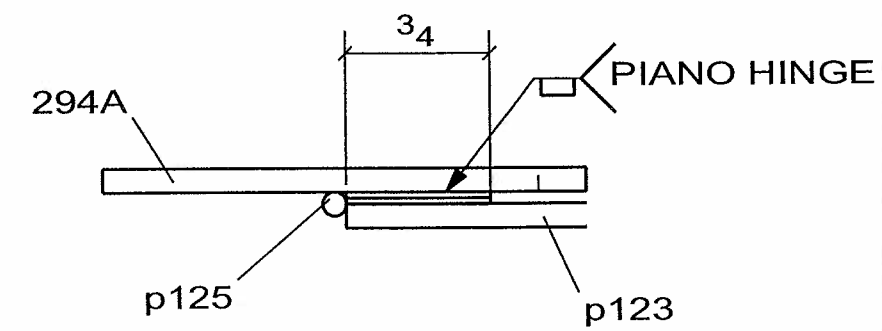

DETAIL 1

NOTE
DEBURR EDGES

WELD NOTE FOR ANY ASSEMBLY REQUIRING TACK WELDS:
- ALL TACK WELDS ARE TO BE MADE IN THE WELD JOINT ONLY

4 - SS_COVER -294A

No to SHIP	SHIP MARK	No PIECES	PIECE MARKS	DESCRIPTION	LENGTH	GRADE	REMARKS	WEIGHT	ADVANCE BILL
4	294A			SS_COVER		BRUSHED FINISH		42	
		4	294A	PL[redacted]21 13/16 X 11 GA.	4'-3"	A304	BEND	37	
		4	p123	FB[redacted]11 X 11 GA.	0'-11"	A304		4	
		4	p124	ROD1/4	0'-3 3/8"	A304	BEND	0	
		4	p125	[redacted] SS PIANO HINGE	0'-11"	A304	W / HOLES	0	
		[redacted]						0	

CONTRACTOR NOTE:
THIS DRAWING IS BEING SUBMITTED FOR APPROVAL AS REQUIRED. VERIFY OR SUPPLY ALL QUANTITIES, ALL DIMENSIONS, ALL INFORMATION, & ALL CONFIGURATIONS.

PRINT RECORD

NO.	USE	DATE
	APPR.	
	APPR.	
	PURCH	
	FAB	
	FAB. OFFICE	
	Q.A.	
	DIST.	
	ERECT.	

OPEN HOLES 15/16 Ø U/N
WELD BRIDGE WELDING CODE: D1.5
STEEL AS NOTED
BOLTS
SURFACE PREP-SP
PAINT SEE SPECS
REF.DRAWING E6, E7, E8, E9

REV	DATE	DESCRIPTION	
0	SEP/10/06	FOR APPROVAL	VS

RAINIER WELDING
19020 NE 84TH STREET - REDMOND, WA 98053
(425) 868-1300 FAX (425) 868-8872
STEEL AND ALUMINUM FABRICATING

PROJECT TOLT BRIDGE No 1834A
THIS DRAWING INCLUDES
FOR SNOHOMISH COUNTY OFFICIAL
DRAWN DJ DATE 07/31/2006 CHK DSC DATE 09/10/2006 DWG NUMBER 2707 - 294A 0

☐ CONFORMS TO DESIGN CONCEPT
☒ CONFORMS TO DESIGN CONCEPT WITH REVISIONS AS SHOWN
☐ NON-CONFORMING–REVISE & RESUBMIT

THIS SHOP DRAWING HAS BEEN REVIEWED FOR GENERAL CONFORMANCE WITH DESIGN CONCEPT ONLY AND DOES NOT RELIEVE THE FABRICATOR/VENDOR OF RESPONSIBLITY FOR CONFORMANCE WITH DESIGN DRAWINGS AND SPECIFICATIONS ALL OF WHICH HAVE PRIORITY OVER THIS SHOP DRAWING.

By A.F. Date 10/13/06

LIN & ASSOCIATES, INC.

PRO DRAFT INC. PDI# 676 : PH:(604)589-6425
DRAWINGS PREPARED ON 3D-Xsteel File Name :- A [295.A]
Model Name: 725_102_TOLT_BRIDGE_541
Plot Date: 09/10/2006 12:20:56

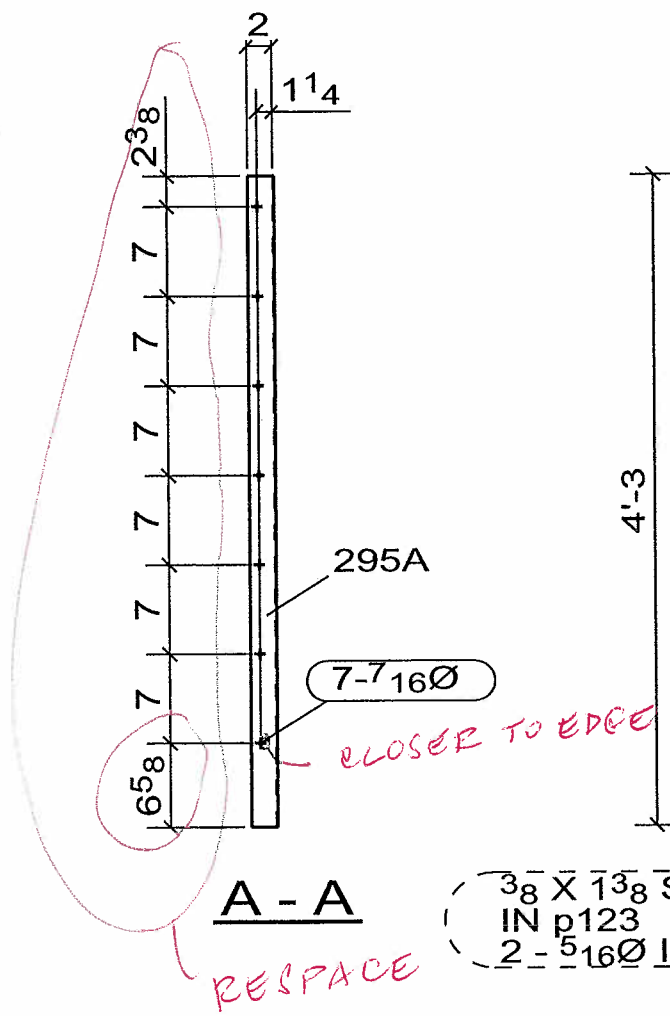

A - A

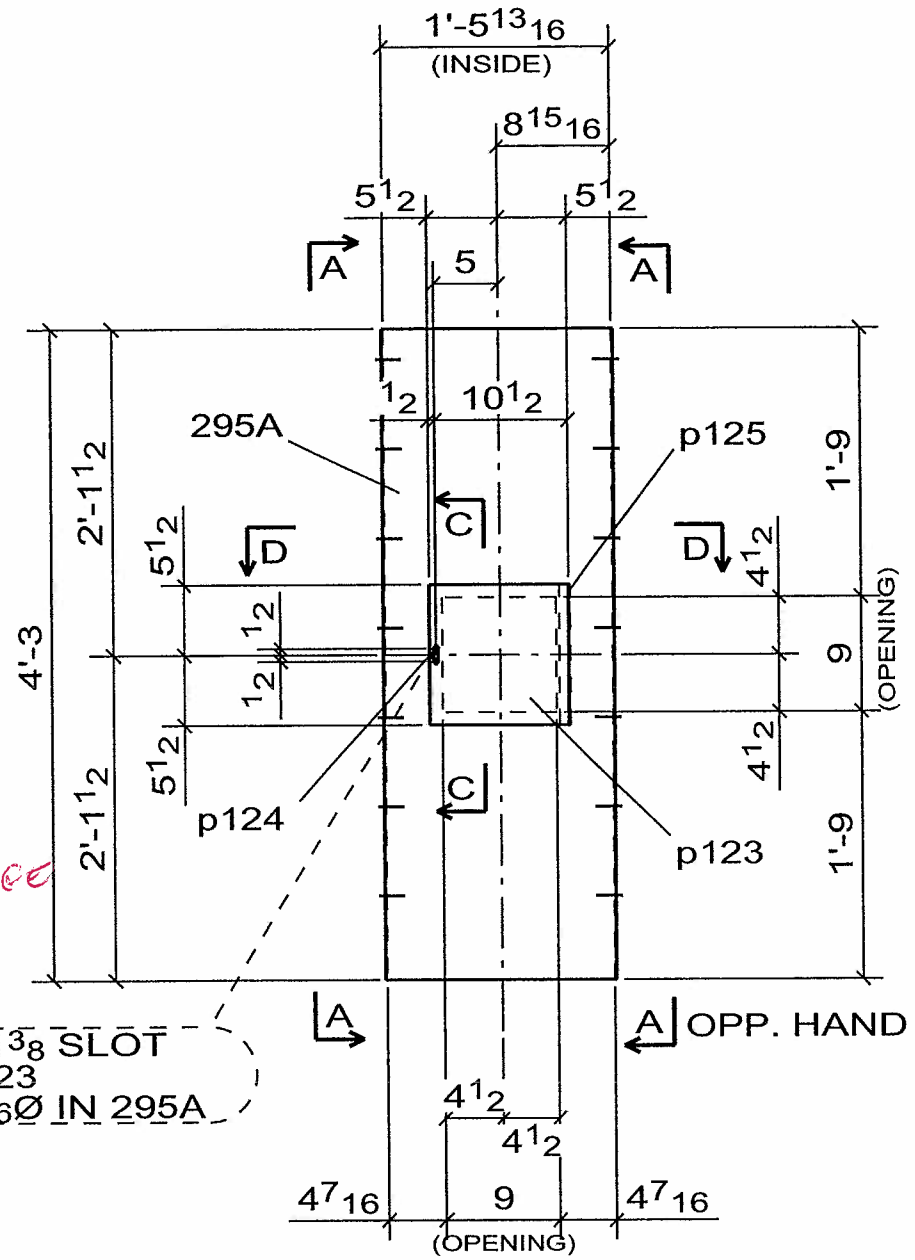

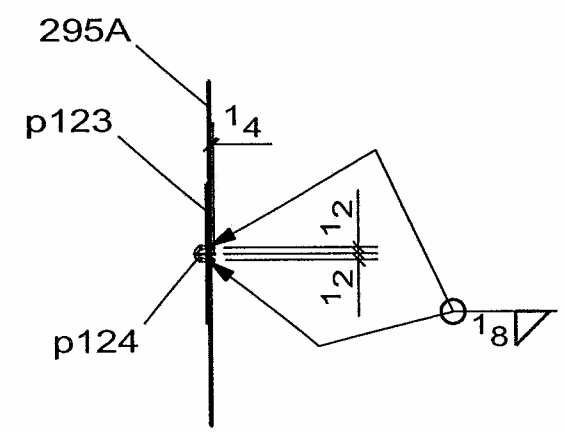

C - C

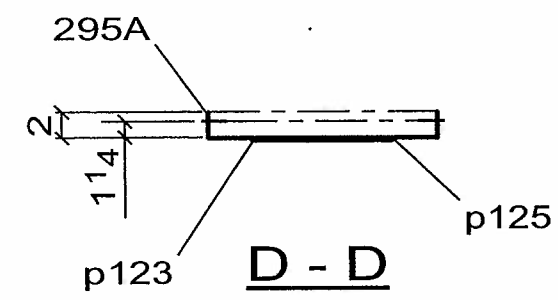

D - D

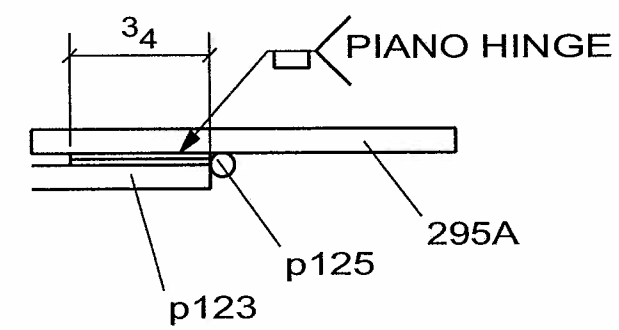

DETAIL 1

NOTE

DEBURR EDGES

WELD NOTE FOR ANY ASSEMBLY REQUIRING TACK WELDS:
- ALL TACK WELDS ARE TO BE MADE IN THE WELD JOINT ONLY

4 - SS_COVER - 295A

No to SHIP	SHIP MARK	No PIECES	PIECE MARKS	DESCRIPTION	LENGTH	GRADE	REMARKS	WEIGHT	ADVANCE BILL
4	295A			SS_COVER			BRUSHED FINISH	42	
		4	295A	PL[redacted]21 13/16 X 11 GA.	4'-3"	A304	BEND	37	
		4	p123	FB[redacted]11 X 11 GA.	0'-11"	A304		4	
		4	p124	ROD1/4	0'-3 3/8"	A304	BEND	0	
		4	p125	[redacted] SS PIANO HINGE	0'-11"	A304	W / HOLES	0	
		[redacted]						0	

CONTRACTOR NOTE:
THIS DRAWING IS BEING SUBMITTED FOR APPROVAL AS REQUIRED. VERIFY OR SUPPLY ALL QUANTITIES, ALL DIMENSIONS, ALL INFORMATION, & ALL CONFIGURATIONS.

PRINT RECORD

NO.	USE	DATE
	APPR.	
	APPR.	
	PURCH	
	FAB	
	FAB. OFFICE	
	Q.A.	
	DIST.	
	ERECT.	

OPEN HOLES: 15/16 Ø U/N
WELD: BRIDGE WELDING CODE: D1.5
STEEL: AS NOTED
BOLTS:
SURFACE PREP-SP:
PAINT: SEE SPECS
REF.DRAWING: E6, E7, E8, E9

REV	DATE	DESCRIPTION	
0	SEP/10/06	FOR APPROVAL	VS

RAINIER WELDING

19020 NE 84TH STREET - REDMOND, WA 98053
(425) 868-1300 FAX (425) 868-8872
STEEL AND ALUMINUM FABRICATING

PROJECT: TOLT BRIDGE No 1834A
THIS DRAWING INCLUDES:
FOR: SNOHOMISH COUNTY OFFICIAL

DRAWN DJ DATE 07/31/2006 | CHK DSC DATE 09/10/2006 | DWG NUMBER 2707 - 295A | 0

☒ CONFORMS TO DESIGN CONCEPT
☐ CONFORMS TO DESIGN CONCEPT WITH REVISIONS AS SHOWN
☐ NON-CONFORMING–REVISE & RESUBMIT

THIS SHOP DRAWING HAS BEEN REVIEWED FOR GENERAL CONFORMANCE WITH DESIGN CONCEPT ONLY AND DOES NOT RELIEVE THE FABRICATOR/VENDOR OF RESPONSIBLITY FOR CONFORMANCE WITH DESIGN DRAWINGS AND SPECIFICATIONS ALL OF WHICH HAVE PRIORITY OVER THIS SHOP DRAWING.

By A.F. Date 10-13-06

LIN & ASSOCIATES, INC.

PRO DRAFT INC. PDI# 676 : PH:(604)589-6425
DRAWINGS PREPARED ON 3D-Xsteel File Name :- A [296.A]
Model Name: 725_102_TOLT_BRIDGE_541
Plot Date: 09/10/2006 12:20:58

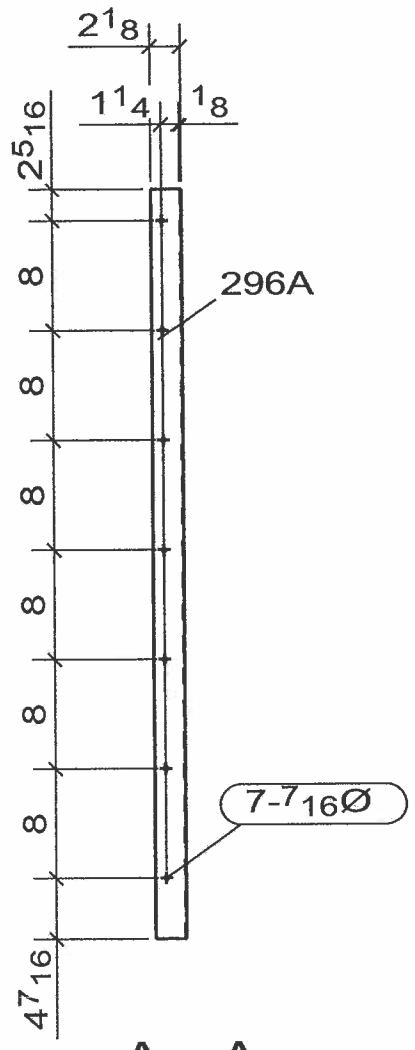

A - A

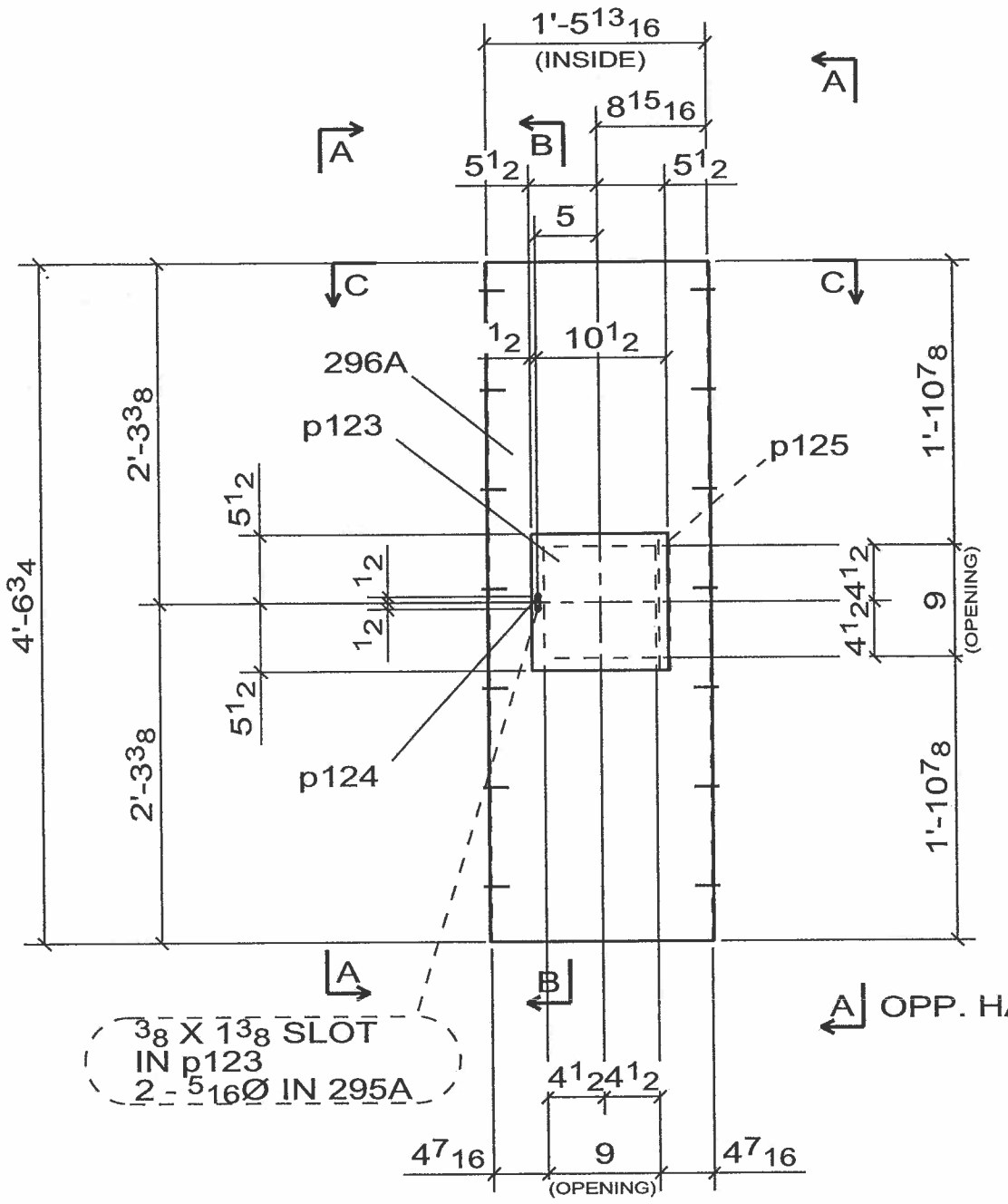

A OPP. HAND

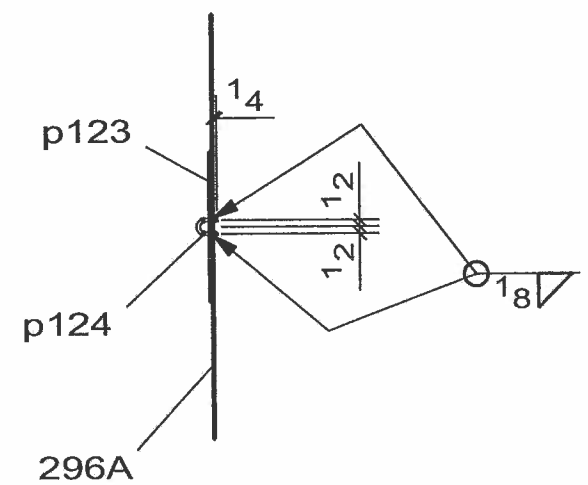

B - B

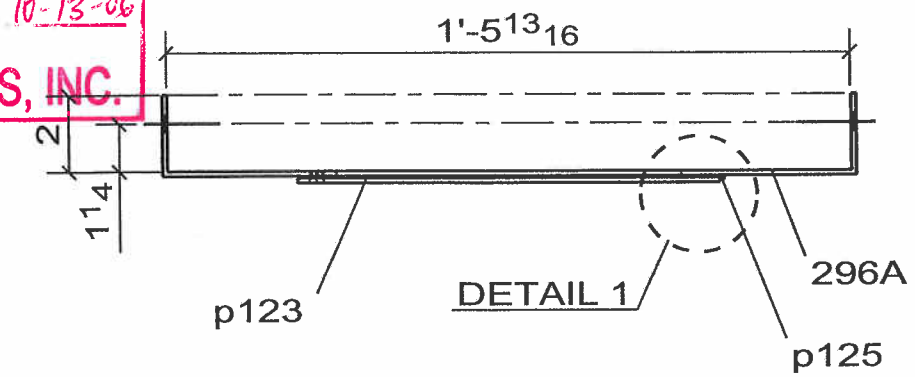

C - C

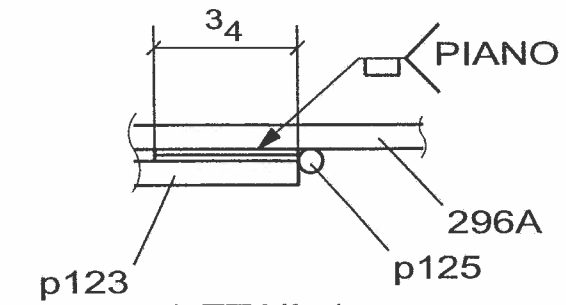

DETAIL 1

NOTE

DEBURR EDGES

WELD NOTE FOR ANY ASSEMBLY REQUIRING TACK WELDS:
- ALL TACK WELDS ARE TO BE MADE IN THE WELD JOINT ONLY

4 - SS_COVER -296A

No to SHIP	SHIP MARK	No PIECES	PIECE MARKS	DESCRIPTION	LENGTH	GRADE	REMARKS	WEIGHT	ADVANCE BILL
4	296A			SS_COVER		BRUSHED FINISH		45	
		4	296A	PL[redacted]21 13/16 X 11 GA.	4'-6 3/4"	A304	BEND	40	
		4	p123	FB[redacted]11 X 11 GA.	0'-11"	A304		4	
		4	p124	ROD1/4	0'-3 3/8"	A304	BEND	0	
		4	p125	[redacted] SS PIANO HINGE	0'-11"	A304	W / HOLES	0	
		[redacted]						0	

CONTRACTOR NOTE:
THIS DRAWING IS BEING SUBMITTED FOR APPROVAL AS REQUIRED. VERIFY OR SUPPLY ALL QUANTITIES, ALL DIMENSIONS, ALL INFORMATION, & ALL CONFIGURATIONS.

PRINT RECORD

NO.	USE	DATE
	APPR.	
	APPR.	
	PURCH	
	FAB	
	FAB. OFFICE	
	Q.A.	
	DIST.	
	ERECT	

OPEN HOLES: 15/16 Ø U/N
WELD: BRIDGE WELDING CODE: D1.5
STEEL: AS NOTED
BOLTS:
SURFACE PREP-SP:
PAINT: SEE SPECS
REF.DRAWING: E6, E7, E8, E9

REV	DATE	DESCRIPTION	
0	SEP/10/06	FOR APPROVAL	VS

RAINIER WELDING

19020 NE 84TH STREET - REDMOND, WA 98053
(425) 868-1300 FAX (425) 868-8872
STEEL AND ALUMINUM FABRICATING

PROJECT: TOLT BRIDGE No 1834A
THIS DRAWING INCLUDES:
FOR: SNOHOMISH COUNTY OFFICIAL

DRAWN DJ DATE 07/31/2006 | CHK DSC DATE 09/10/2006 | DWG NUMBER 2707 - 296A | 0

☒ CONFORMS TO DESIGN CONCEPT
☐ CONFORMS TO DESIGN CONCEPT WITH REVISIONS AS SHOWN
☐ NON-CONFORMING–REVISE & RESUBMIT

THIS SHOP DRAWING HAS BEEN REVIEWED FOR GENERAL CONFORMANCE WITH DESIGN CONCEPT ONLY AND DOES NOT RELIEVE THE FABRICATOR/VENDOR OF RESPONSIBLITY FOR CONFORMANCE WITH DESIGN DRAWINGS AND SPECIFICATIONS ALL OF WHICH HAVE PRIORITY OVER THIS SHOP DRAWING.

By A.F. 1 Date 10-13-06

LIN & ASSOCIATES, INC.

PRO DRAFT INC. PDI# 676 : PH:(604)589-6425
DRAWINGS PREPARED ON 3D-Xsteel File Name :- A [297.A]
Model Name: 725_102_TOLT_BRIDGE_541
Plot Date: 09/10/2006 12:20:59

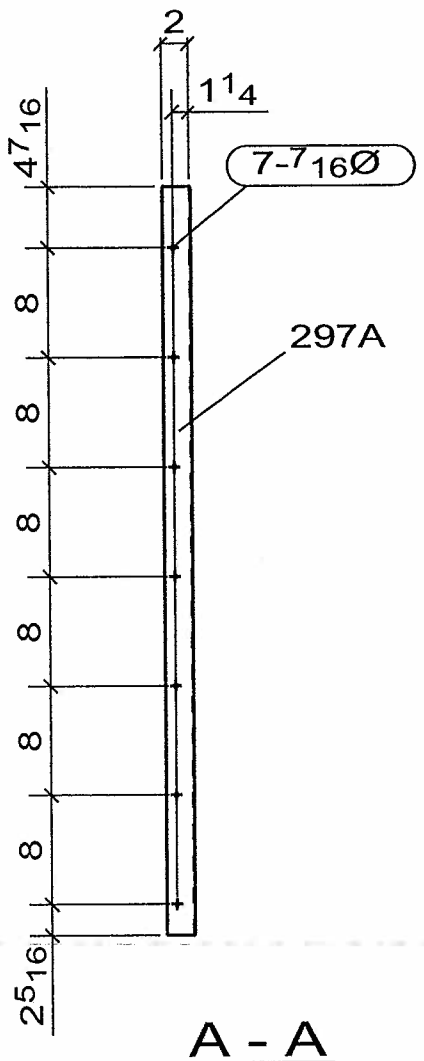

A - A

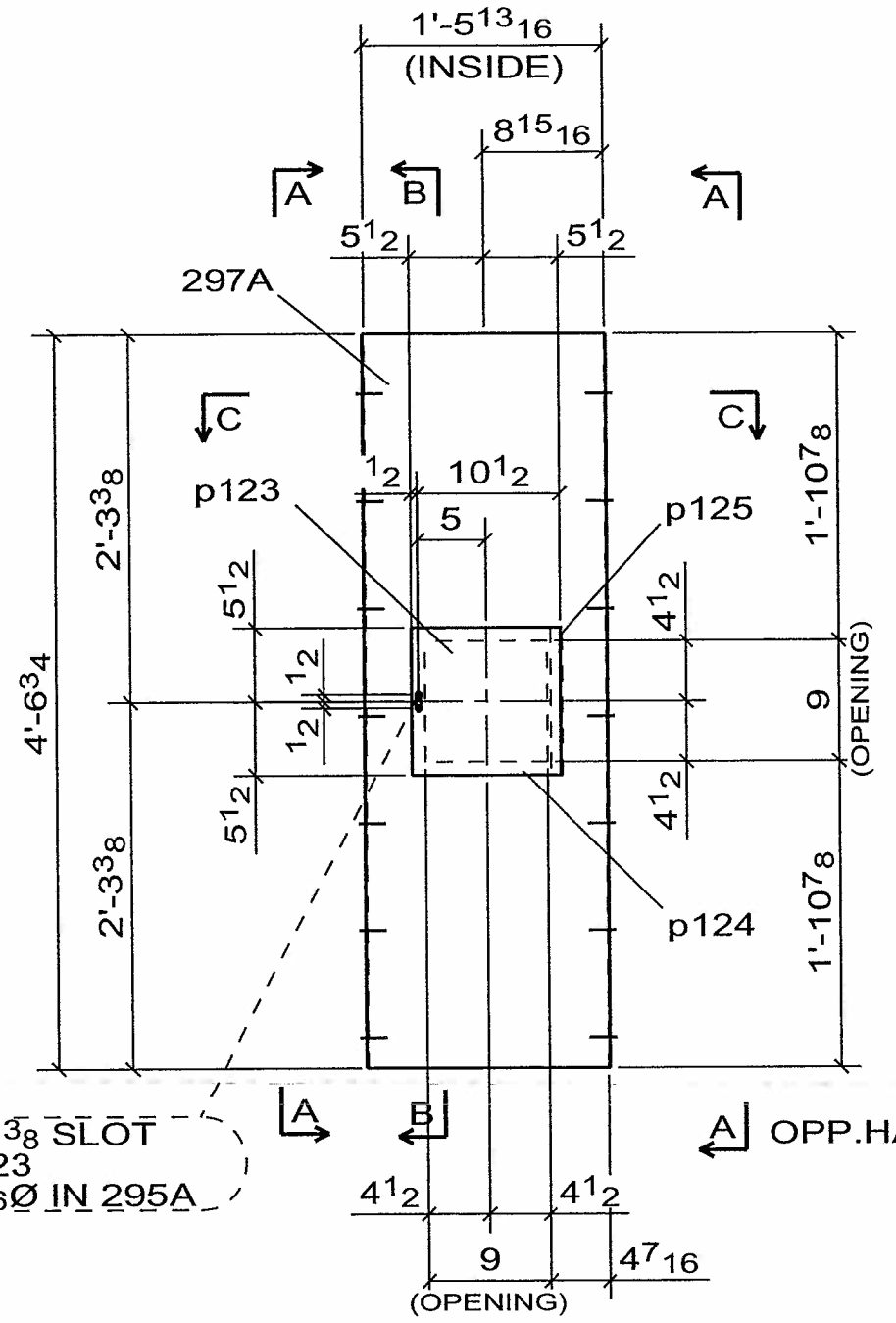

4 - SS_COVER -297A

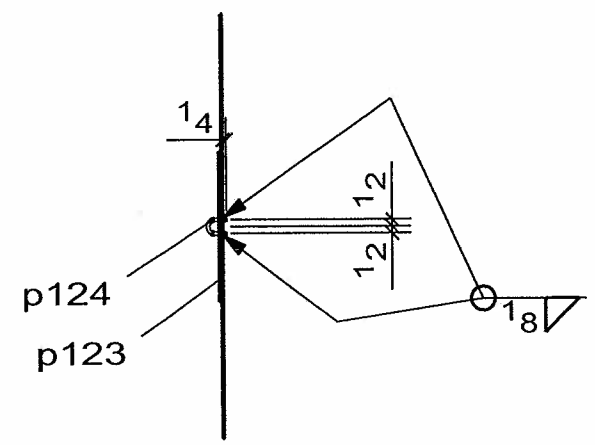

B - B

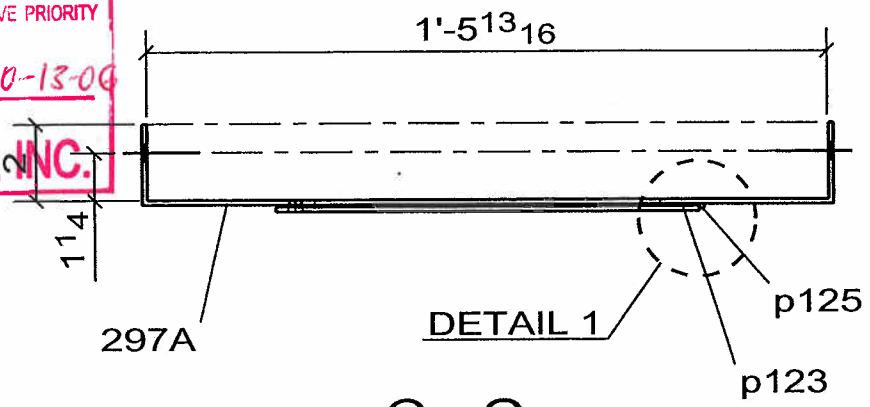

C - C

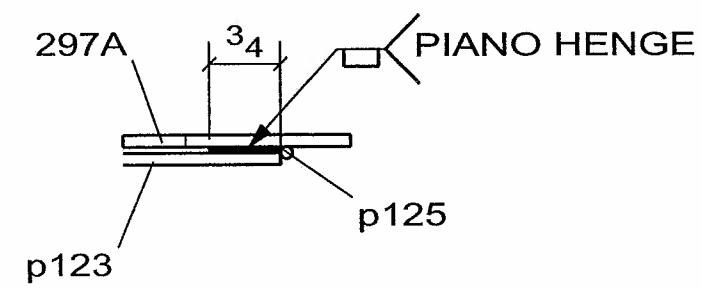

DETAIL 1

NOTE

DEBURR EDGES

WELD NOTE FOR ANY ASSEMBLY REQUIRING TACK WELDS:
- ALL TACK WELDS ARE TO BE MADE IN THE WELD JOINT ONLY

No to SHIP	SHIP MARK	No PIECES	PIECE MARKS	DESCRIPTION	LENGTH	GRADE	REMARKS	WEIGHT	ADVANCE BILL
4	297A			SS_COVER			BRUSHED FINISH	45	
		4	297A	PL[redacted]21 13/16 X 11 GA.	4'-6 3/4"	A304	BEND	40	
		4	p123	FB[redacted]11 X 11 GA.	0'-11"	A304		4	
		4	p124	ROD1/4	0'-3 3/8"	A304	BEND	0	
		4	p125	[redacted] SS PIANO HINGE	0'-11"	A304	W / HOLES	0	
		[redacted]						0	

CONTRACTOR NOTE:
THIS DRAWING IS BEING SUBMITTED FOR APPROVAL AS REQUIRED. VERIFY OR SUPPLY ALL QUANTITIES, ALL DIMENSIONS, ALL INFORMATION, & ALL CONFIGURATIONS.

PRINT RECORD

NO.	USE	DATE
	APPR.	
	APPR.	
	PURCH	
	FAB	
	FAB. OFFICE	
	Q.A.	
	DIST.	
	ERECT.	

OPEN HOLES: 15/16 Ø U/N
WELD: BRIDGE WELDING CODE: D1.5
STEEL: AS NOTED
BOLTS:
SURFACE PREP-SP:
PAINT: SEE SPECS
REF.DRAWING: E6, E7, E8, E9

REV	DATE	DESCRIPTION	
0	SEP/10/06	FOR APPROVAL	VS

RAINIER WELDING

19020 NE 84TH STREET - REDMOND, WA 98053
(425) 868-1300 FAX (425) 868-8872
STEEL AND ALUMINUM FABRICATING

PROJECT: TOLT BRIDGE No 1834A
THIS DRAWING INCLUDES:
FOR: SNOHOMISH COUNTY OFFICIAL

DRAWN DJ DATE 07/31/2006 | CHK DSC DATE 09/10/2006 | DWG NUMBER 2707 - 297A | 0

☒ CONFORMS TO DESIGN CONCEPT
☐ CONFORMS TO DESIGN CONCEPT WITH REVISIONS AS SHOWN
☐ NON-CONFORMING–REVISE & RESUBMIT

THIS SHOP DRAWING HAS BEEN REVIEWED FOR GENERAL CONFORMANCE WITH DESIGN CONCEPT ONLY AND DOES NOT RELIEVE THE FABRICATOR/VENDOR OF RESPONSIBLITY FOR CONFORMANCE WITH DESIGN DRAWINGS AND SPECIFICATIONS ALL OF WHICH HAVE PRIORITY OVER THIS SHOP DRAWING.

By A.F. Date 10-13-06

LIN & ASSOCIATES, INC.

PRO DRAFT INC. PDI# 676 : PH:(604)589-6425
DRAWINGS PREPARED ON 3D-Xsteel File Name :- A [298.A]
Model Name: 725_102_TOLT_BRIDGE_541
Plot Date: 09/10/2006 12:21:00

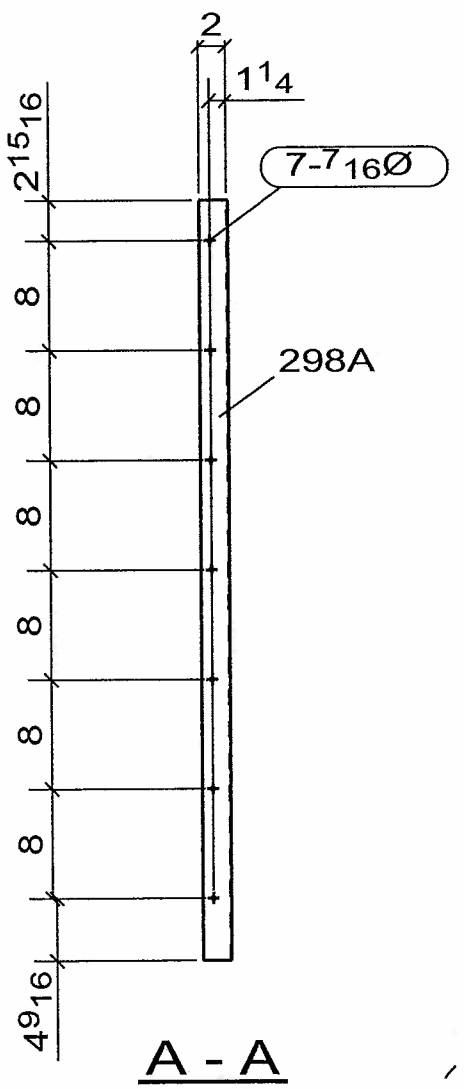

A - A

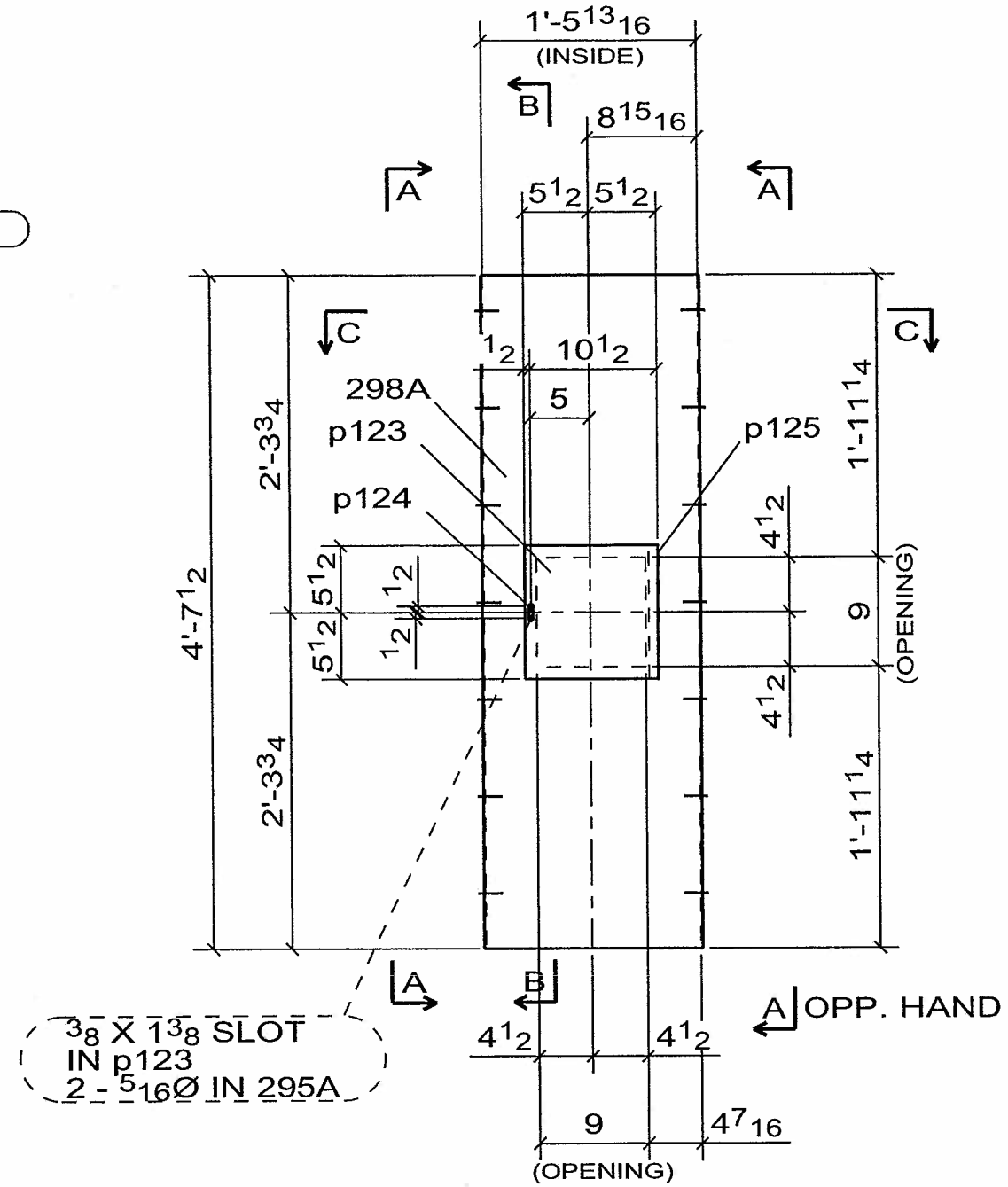

4 - SS_COVER -298A

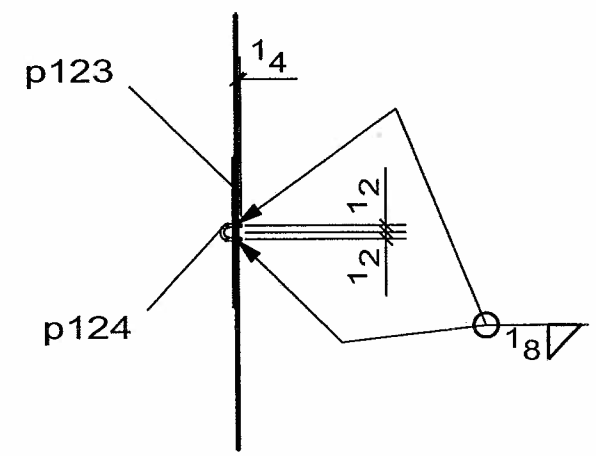

B - B

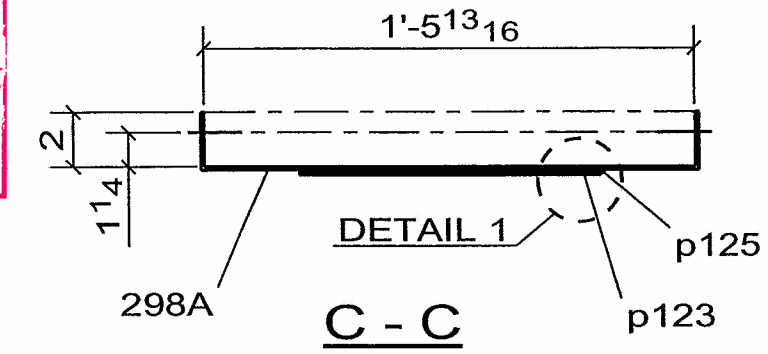

C - C

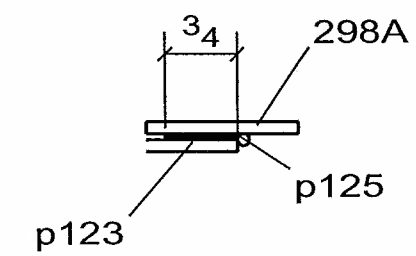

DETAIL 1

NOTE
DEBURR EDGES

WELD NOTE FOR ANY ASSEMBLY REQUIRING TACK WELDS:
- ALL TACK WELDS ARE TO BE MADE IN THE WELD JOINT ONLY

No to SHIP	SHIP MARK	No PIECES	PIECE MARKS	DESCRIPTION	LENGTH	GRADE	REMARKS	WEIGHT	ADVANCE BILL
4	298A			SS_COVER			BRUSHED FINISH	46	
		4	298A	PL[redacted]21 13/16 X 11 GA.	4'-7 1/2"	A304	BEND	41	
		4	p123	FB[redacted]11 X 11 GA.	0'-11"	A304		4	
		4	p124	ROD1/4	0'-3 3/8"	A304	BEND	0	
		4	p125	[redacted] SS PIANO HINGE	0'-11"	A304	W / HOLES	0	
		[redacted]						0	

CONTRACTOR NOTE:
THIS DRAWING IS BEING SUBMITTED FOR APPROVAL AS REQUIRED. VERIFY OR SUPPLY ALL QUANTITIES, ALL DIMENSIONS, ALL INFORMATION, & ALL CONFIGURATIONS.

PRINT RECORD

NO.	USE	DATE
	APPR.	
	APPR.	
	PURCH	
	FAB	
	FAB. OFFICE	
	Q.A.	
	DIST.	
	ERECT.	

OPEN HOLES: 15/16 Ø U/N
WELD: BRIDGE WELDING CODE: D1.5
STEEL: AS NOTED
BOLTS:
SURFACE PREP-SP:
PAINT: SEE SPECS
REF.DRAWING: E6, E7, E8, E9

REV.	DATE	DESCRIPTION	
0	SEP/10/06	FOR APPROVAL	VS

RAINIER WELDING

19020 NE 84TH STREET - REDMOND, WA 98053
(425) 868-1300 FAX (425) 868-8872
STEEL AND ALUMINUM FABRICATING

PROJECT: TOLT BRIDGE No 1834A
THIS DRAWING INCLUDES:
FOR: SNOHOMISH COUNTY OFFICIAL

DRAWN DJ DATE 07/31/2006 | CHK DSC DATE 09/10/2006 | DWG NUMBER 2707 - 298A | 0

☒ CONFORMS TO DESIGN CONCEPT
☐ CONFORMS TO DESIGN CONCEPT WITH REVISIONS AS SHOWN
☐ NON-CONFORMING–REVISE & RESUBMIT

THIS SHOP DRAWING HAS BEEN REVIEWED FOR GENERAL CONFORMANCE WITH DESIGN CONCEPT ONLY AND DOES NOT RELIEVE THE FABRICATOR/VENDOR OF RESPONSIBLITY FOR CONFORMANCE WITH DESIGN DRAWINGS AND SPECIFICATIONS ALL OF WHICH HAVE PRIORITY OVER THIS SHOP DRAWING.

By A.F. Date 10-13-06

LIN & ASSOCIATES, INC.

PRO DRAFT INC. PDI# 676 : PH:(604)589-6425
DRAWINGS PREPARED ON 3D-Xsteel File Name :- A [299.A]
Model Name: 725_102_TOLT_BRIDGE_541
Plot Date: 09/10/2006 12:21:02

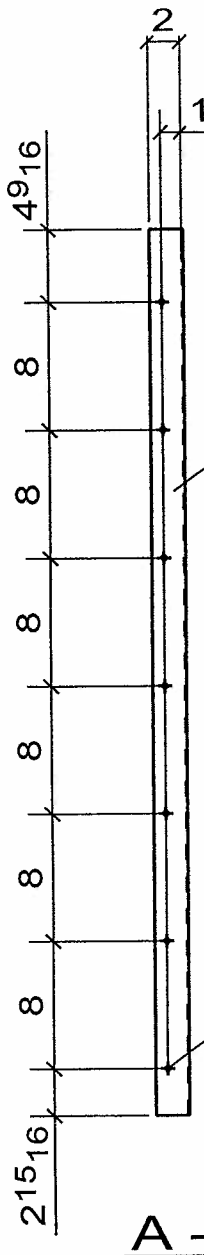

A - A

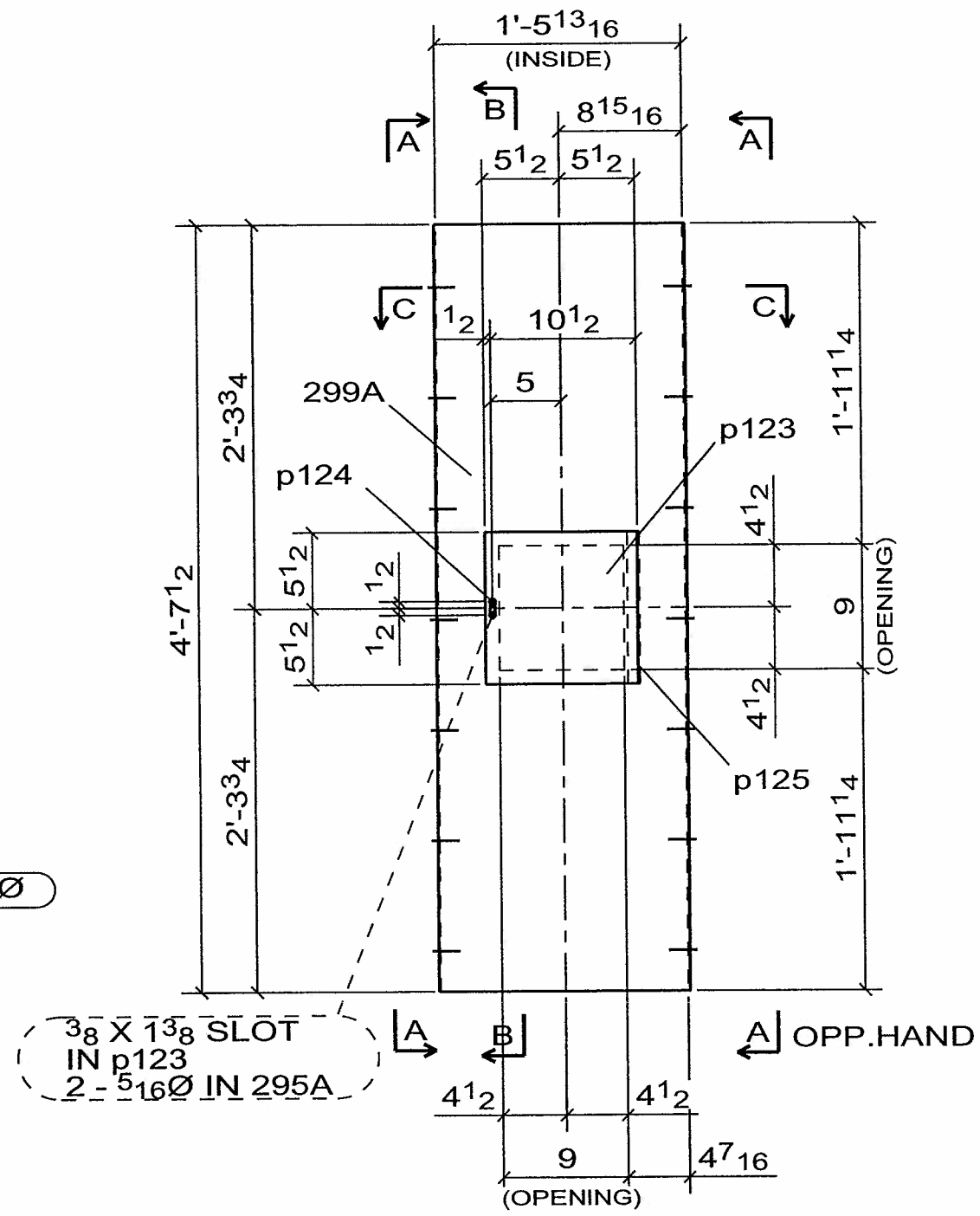

4 - SS_COVER -299A

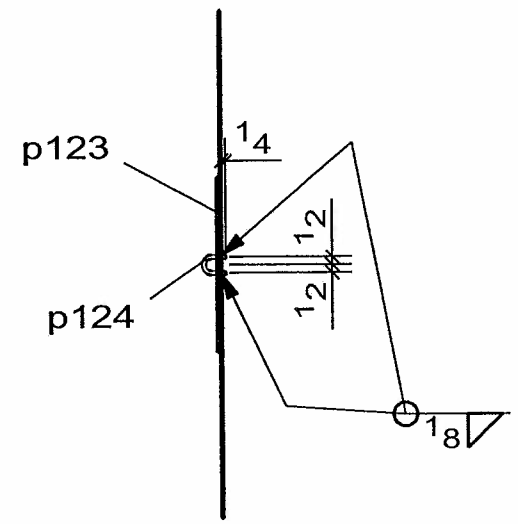

B - B

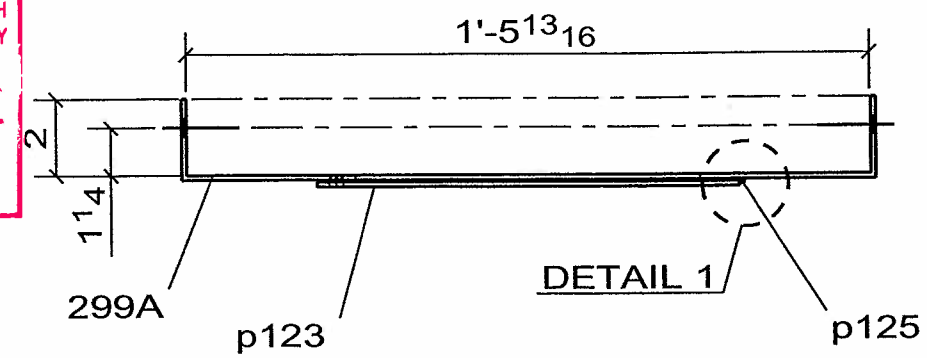

C - C

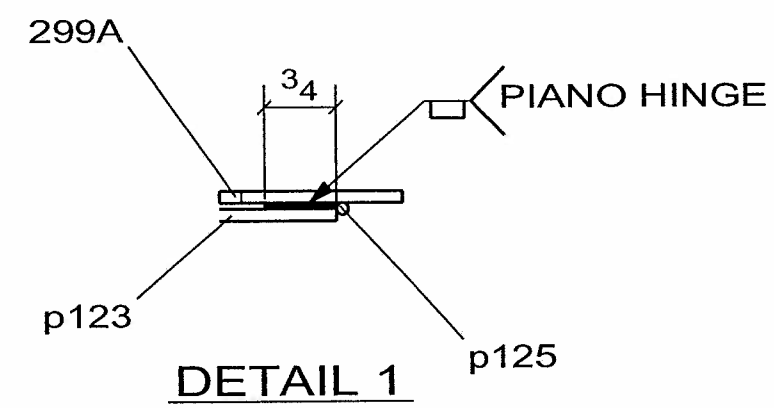

DETAIL 1

NOTE
DEBURR EDGES

WELD NOTE FOR ANY ASSEMBLY REQUIRING TACK WELDS:
- ALL TACK WELDS ARE TO BE MADE IN THE WELD JOINT ONLY

No to SHIP	SHIP MARK	No PIECES	PIECE MARKS	DESCRIPTION	LENGTH	GRADE	REMARKS	WEIGHT	ADVANCE BILL
4	299A			SS_COVER		BRUSHED FINISH		46	
		4	299A	PL[redacted]21 13/16 X 11 GA.	4'-7 1/2"	A304	BEND	41	
		4	p123	FB[redacted]11 X 11 GA.	0'-11"	A304		4	
		4	p124	ROD1/4	0'-3 3/8"	A304	BEND	0	
		4	p125	[redacted] SS PIANO HINGE	0'-11"	A304	W / HOLES	0	
		[redacted]						0	

CONTRACTOR NOTE:
THIS DRAWING IS BEING SUBMITTED FOR APPROVAL AS REQUIRED. VERIFY OR SUPPLY ALL QUANTITIES, ALL DIMENSIONS, ALL INFORMATION, & ALL CONFIGURATIONS.

PRINT RECORD

NO.	USE	DATE
	APPR.	
	APPR.	
	PURCH	
	FAB	
	FAB. OFFICE	
	Q.A.	
	DIST.	
	ERECT.	

OPEN HOLES: 15/16 Ø U/N
WELD: BRIDGE WELDING CODE: D1.5
STEEL: AS NOTED
BOLTS:
SURFACE PREP-SP:
PAINT: SEE SPECS
REF.DRAWING: E6, E7, E8, E9

REV	DATE	DESCRIPTION	
0	SEP/10/06	FOR APPROVAL	VS

RAINIER WELDING

19020 NE 84TH STREET - REDMOND, WA 98053
(425) 868-1300 FAX (425) 868-8872
STEEL AND ALUMINUM FABRICATING

PROJECT: TOLT BRIDGE No 1834A
THIS DRAWING INCLUDES:
FOR: SNOHOMISH COUNTY OFFICIAL

DRAWN DJ DATE 07/31/2006 | CHK DSC DATE 09/10/2006 | DWG NUMBER 2707 - 299A | 0

PRO DRAFT INC. PDI# 676 : PH:(604)589-6425
DRAWINGS PREPARED ON 3D-Xsteel File Name :- A [302.A]
Model Name: 725_102_TOLT_BRIDGE_541
Plot Date: 09/10/2006 12:21:03

☐ CONFORMS TO DESIGN CONCEPT
☑ CONFORMS TO DESIGN CONCEPT WITH REVISIONS AS SHOWN
☐ NON-CONFORMING–REVISE & RESUBMIT
THIS SHOP DRAWING HAS BEEN REVIEWED FOR GENERAL CONFORMANCE WITH DESIGN CONCEPT ONLY AND DOES NOT RELIEVE THE FABRICATOR/VENDOR OF RESPONSIBLITY FOR CONFORMANCE WITH DESIGN DRAWINGS AND SPECIFICATIONS ALL OF WHICH HAVE PRIORITY OVER THIS SHOP DRAWING.
By A. F. Date 10/13/06
LIN & ASSOCIATES, INC.

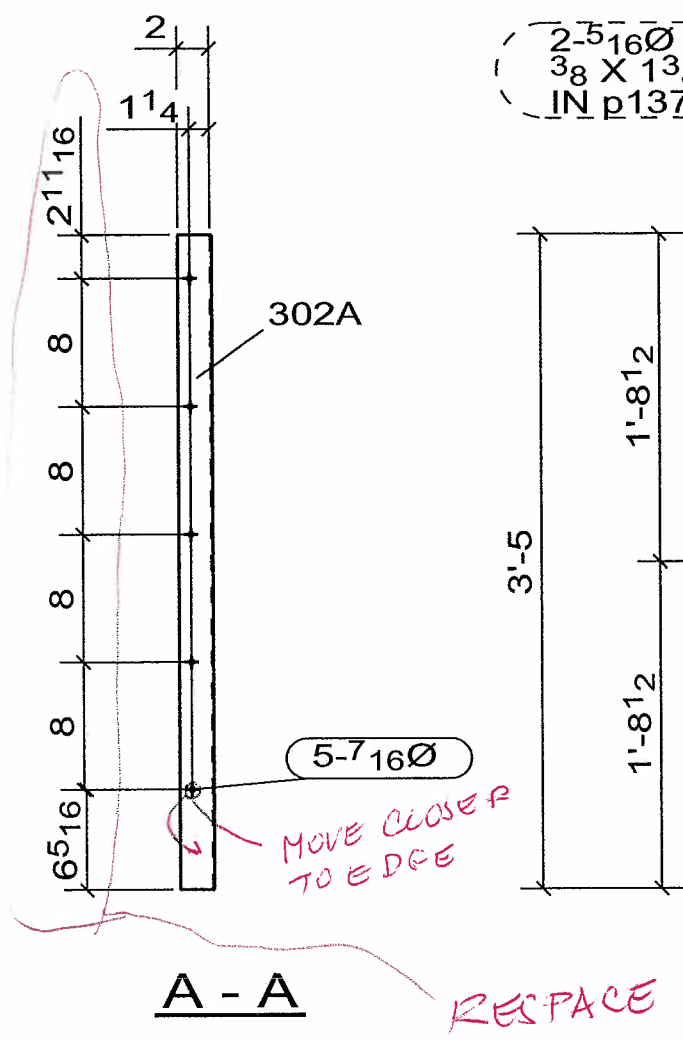

A - A

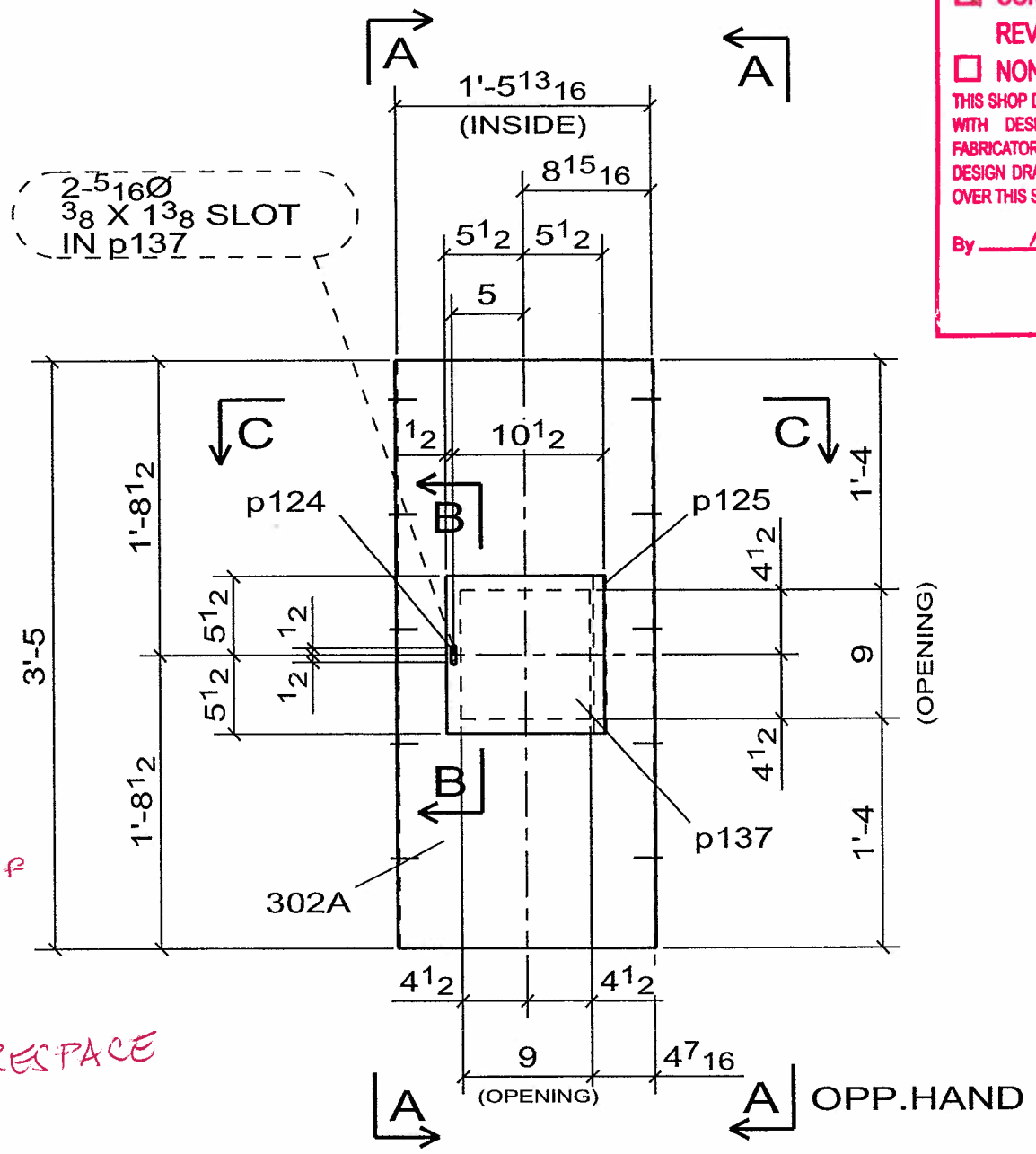

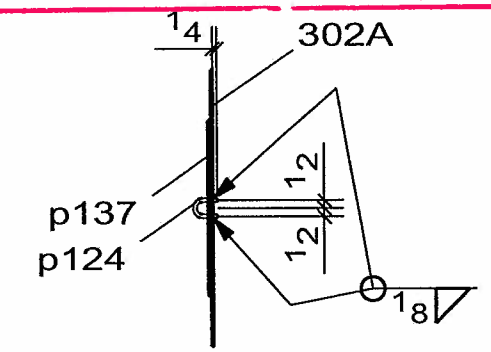

B - B

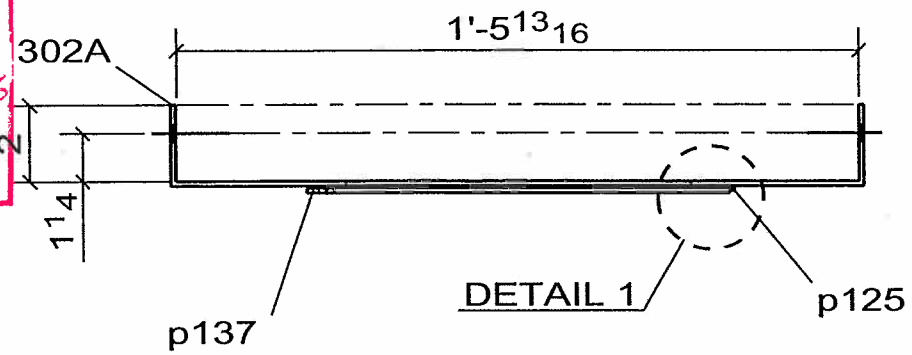

C - C

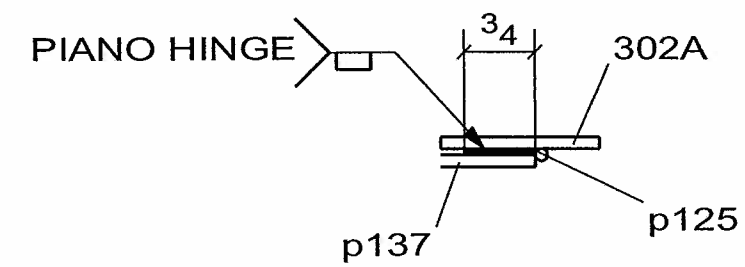

DETAIL 1

NOTE

DEBURR EDGES

WELD NOTE FOR ANY ASSEMBLY REQUIRING TACK WELDS:
- ALL TACK WELDS ARE TO BE MADE IN THE WELD JOINT ONLY

1 - SS_COVER -302A

No to SHIP	SHIP MARK	No PIECES	PIECE MARKS	DESCRIPTION	LENGTH	GRADE	REMARKS	WEIGHT	ADVANCE BILL
1	302A			SS_COVER			BRUSHED FINISH	34	
		1	302A	PL[redacted]21 13/16 X 11 GA	3'-5"	A304	BEND	30	
		1	p124	ROD1/4	0'-3 3/8"	A304	BEND	0	
		1	p125	[redacted] SS PIANO HINGE	0'-11"	A304	W / HOLES	0	
		[redacted]						0	
		1	p137	FB[redacted]11 X 11 GA	0'-11"	A304		4	

CONTRACTOR NOTE:
THIS DRAWING IS BEING SUBMITTED FOR APPROVAL AS REQUIRED. VERIFY OR SUPPLY ALL QUANTITIES, ALL DIMENSIONS, ALL INFORMATION, & ALL CONFIGURATIONS.

PRINT RECORD

NO.	USE	DATE
	APPR.	
	APPR.	
	PURCH	
	FAB	
	FAB. OFFICE	
	Q.A.	
	DIST.	
	ERECT.	

OPEN HOLES: 15/16 Ø U/N
WELD: BRIDGE WELDING CODE: D1.5
STEEL: AS NOTED
BOLTS:
SURFACE PREP-SP:
PAINT: SEE SPECS
REF.DRAWING: E8

REV	DATE	DESCRIPTION	
0	SEP/10/06	FOR APPROVAL	VS

RAINIER WELDING

19020 NE 84TH STREET - REDMOND, WA 98053
(425) 868-1300 FAX (425) 868-8872
STEEL AND ALUMINUM FABRICATING

PROJECT: TOLT BRIDGE No 1834A
THIS DRAWING INCLUDES:
FOR: SNOHOMISH COUNTY OFFICIAL

DRAWN DJ DATE 07/31/2006 | CHK DSC DATE 09/10/2006 | DWG NUMBER 2707 - 302A | 0

☒ CONFORMS TO DESIGN CONCEPT
☐ CONFORMS TO DESIGN CONCEPT WITH REVISIONS AS SHOWN
☐ NON-CONFORMING–REVISE & RESUBMIT

THIS SHOP DRAWING HAS BEEN REVIEWED FOR GENERAL CONFORMANCE WITH DESIGN CONCEPT ONLY AND DOES NOT RELIEVE THE FABRICATOR/VENDOR OF RESPONSIBLITY FOR CONFORMANCE WITH DESIGN DRAWINGS AND SPECIFICATIONS ALL OF WHICH HAVE PRIORITY OVER THIS SHOP DRAWING.

By A.F. Date 10-13-06

LIN & ASSOCIATES, INC.

PRO DRAFT INC. PDI# 676 : PH:(604)589-6425
DRAWINGS PREPARED ON 3D-Xsteel File Name :- A [303.A]
Model Name: 725_102_TOLT_BRIDGE_541
Plot Date: 09/10/2006 12:21:05

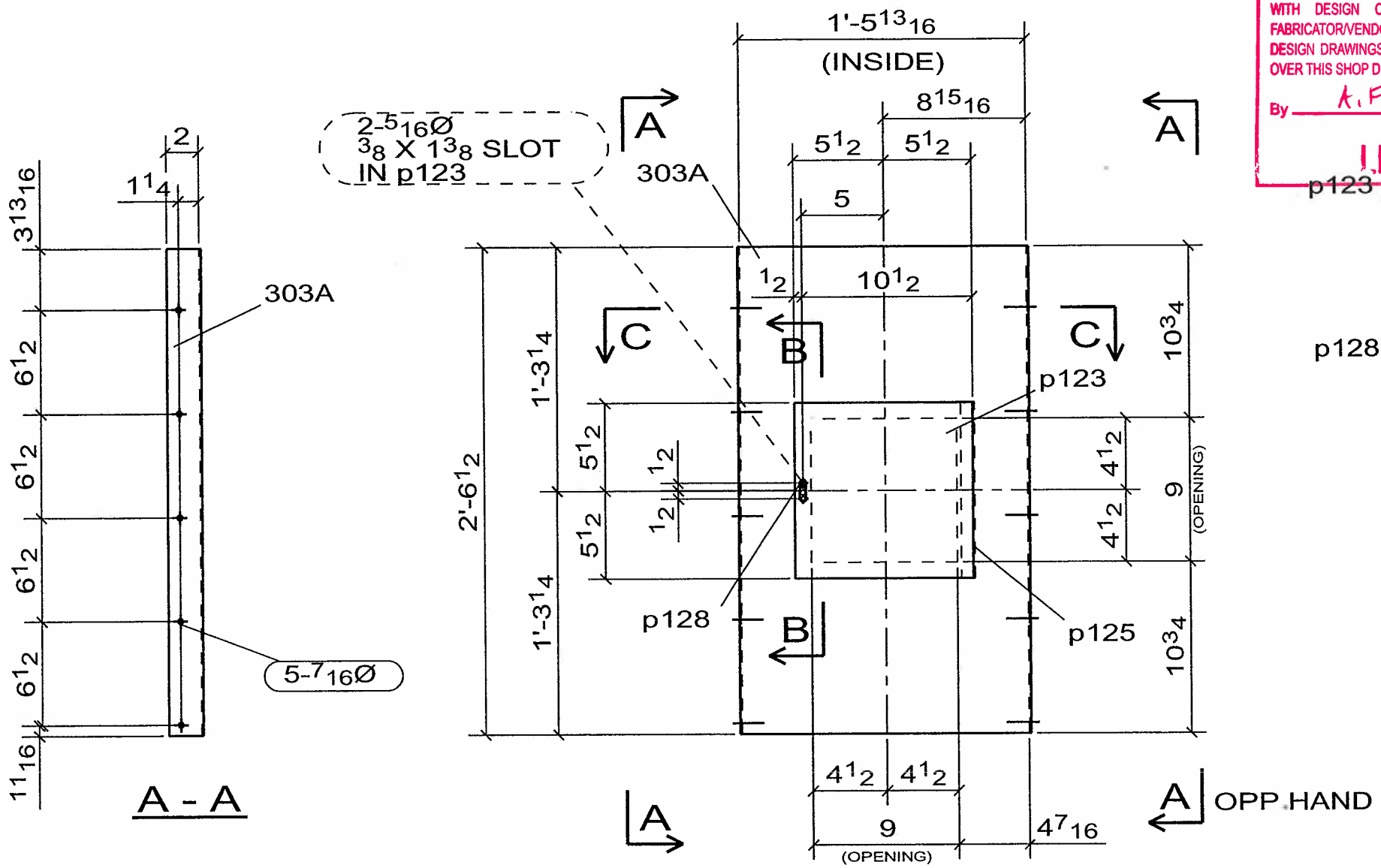

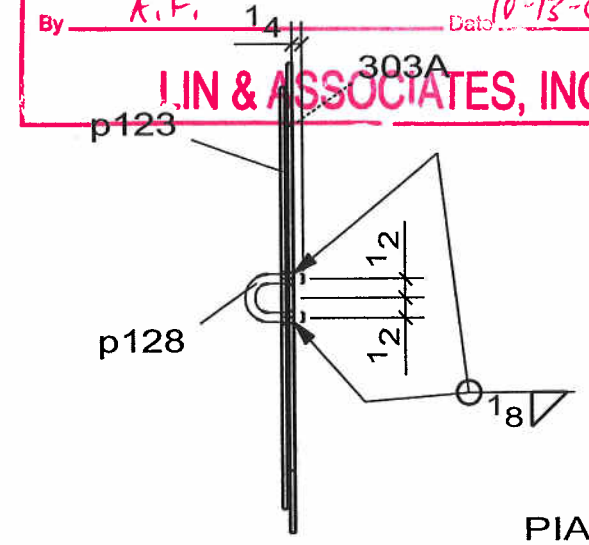

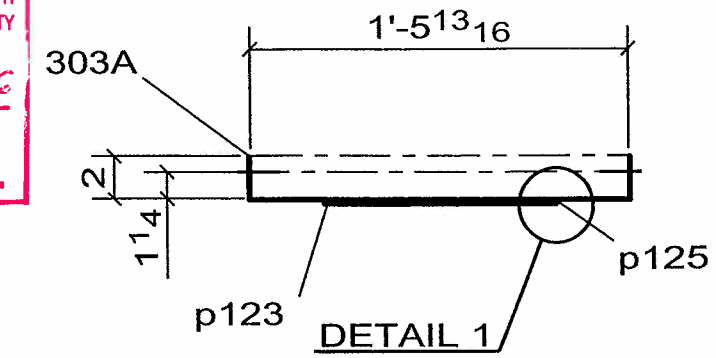

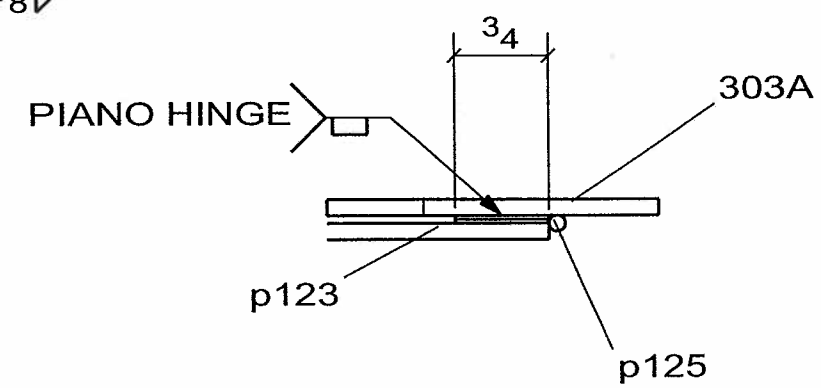

DETAIL 1

NOTE
DEBURR EDGES

WELD NOTE FOR ANY ASSEMBLY REQUIRING TACK WELDS:
- ALL TACK WELDS ARE TO BE MADE IN THE WELD JOINT ONLY

2 - SS_COVER -303A

No to SHIP	SHIP MARK	No PIECES	PIECE MARKS	DESCRIPTION	LENGTH	GRADE	REMARKS	WEIGHT	ADVANCE BILL
2	303A			SS_COVER			BRUSH FINISH	26	
		2	303A	PL[redacted]21 13/16 X 11 GA	2'-6 1/2"	A304	BEND	21	
		2	p123	FB[redacted]11 X 11 GA	0'-11"	A304		4	
		2	p125	[redacted] SS PIANO HINGE	0'-11"	A304	W / HOLES	0	
		[redacted]						0	
		2	p128	ROD1/4	0'-3 3/8"	A304	BEND	0	

CONTRACTOR NOTE:
THIS DRAWING IS BEING SUBMITTED FOR APPROVAL AS REQUIRED. VERIFY OR SUPPLY ALL QUANTITIES, ALL DIMENSIONS, ALL INFORMATION, & ALL CONFIGURATIONS.

PRINT RECORD

NO.	USE	DATE
	APPR.	
	APPR.	
	PURCH	
	FAB	
	FAB. OFFICE	
	Q.A.	
	DIST.	
	ERECT.	

OPEN HOLES: 15/16 Ø U/N
WELD: BRIDGE WELDING CODE: D1.5
STEEL: AS NOTED
BOLTS:
SURFACE PREP-SP:
PAINT: SEE SPECS
REF.DRAWING: E7, E8

REV	DATE	DESCRIPTION	
0	SEP/10/06	FOR APPROVAL	VS

RAINIER WELDING

19020 NE 84TH STREET - REDMOND, WA 98053
(425) 868-1300 FAX (425) 868-8872
STEEL AND ALUMINUM FABRICATING

PROJECT: TOLT BRIDGE No 1834A
THIS DRAWING INCLUDES:
FOR: SNOHOMISH COUNTY OFFICIAL

DRAWN DJ DATE 07/31/2006 | CHK DSC DATE 09/10/2006 | DWG NUMBER 2707 - 303A | 0

PRO DRAFT INC. PDI# 676 : PH:(604)589-6425
DRAWINGS PREPARED ON 3D-Xsteel File Name :- A [304.A]
Model Name: 725_102_TOLT_BRIDGE_541
Plot Date: 09/10/2006 12:21:06

☐ CONFORMS TO DESIGN CONCEPT
☒ CONFORMS TO DESIGN CONCEPT WITH REVISIONS AS SHOWN
☐ NON-CONFORMING–REVISE & RESUBMIT
THIS SHOP DRAWING HAS BEEN REVIEWED FOR GENERAL CONFORMANCE WITH DESIGN CONCEPT ONLY AND DOES NOT RELIEVE THE FABRICATOR/VENDOR OF RESPONSIBILITY FOR CONFORMANCE WITH DESIGN DRAWINGS AND SPECIFICATIONS ALL OF WHICH HAVE PRIORITY OVER THIS SHOP DRAWING.
By A.F. Date 10/13/06
LIN & ASSOCIATES, INC.

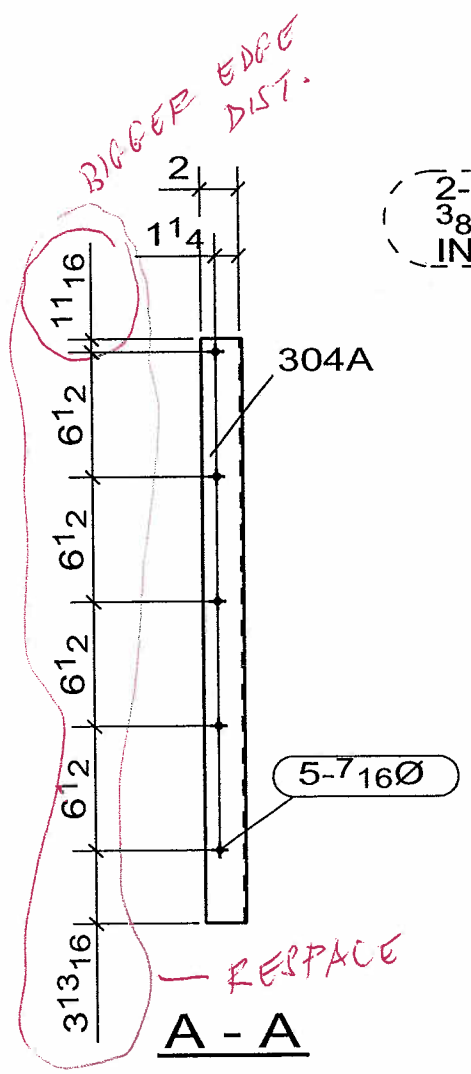

A - A

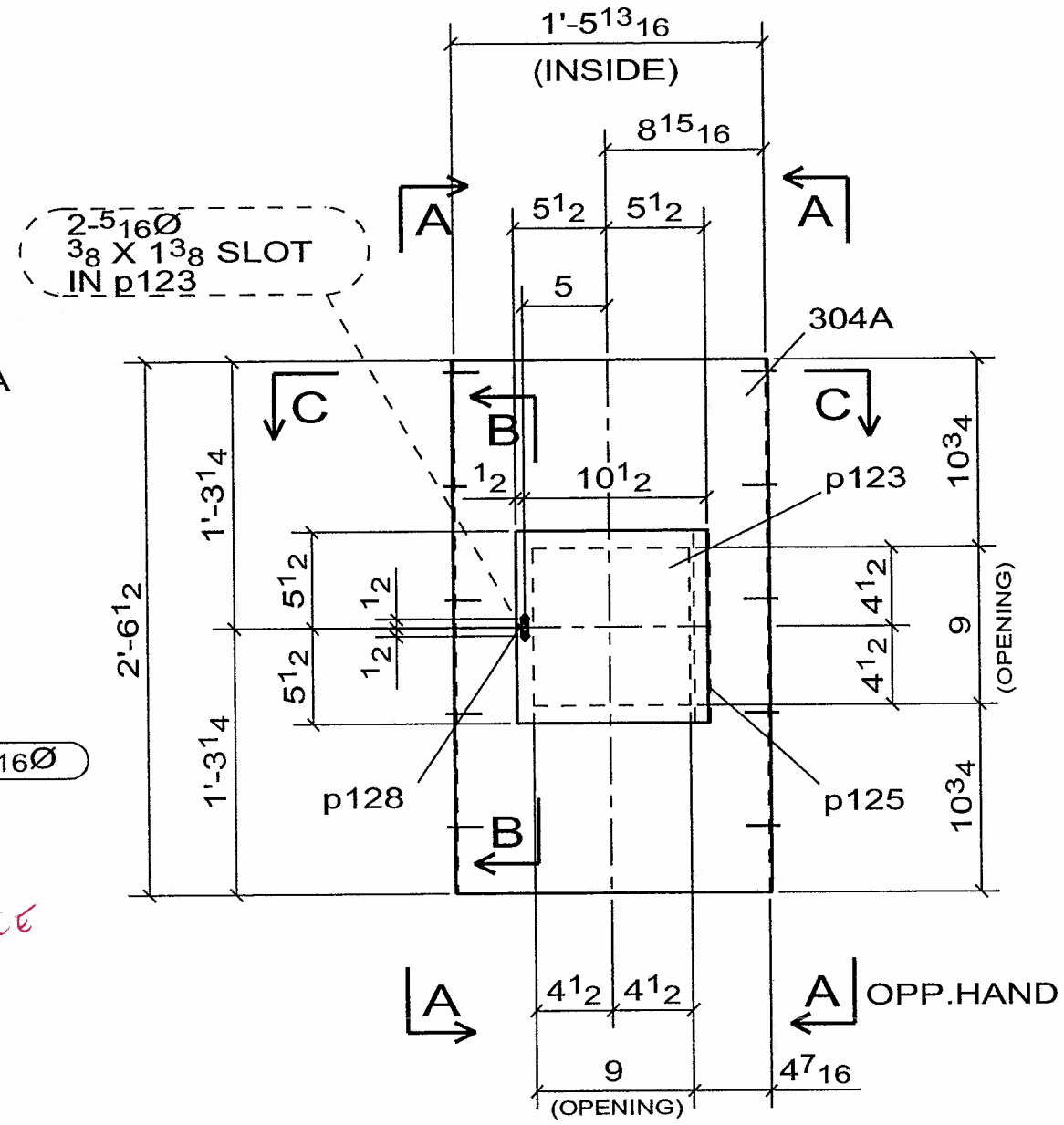

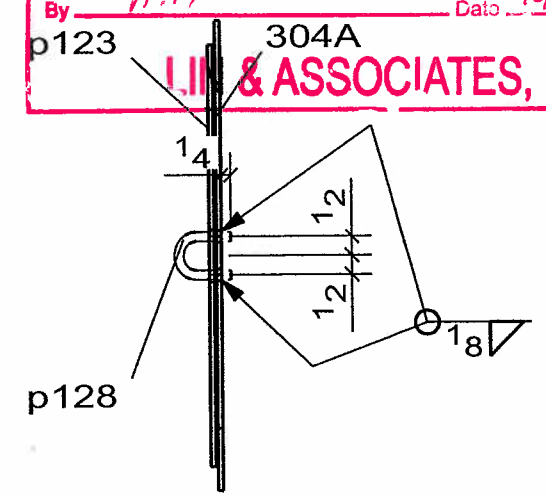

B - B

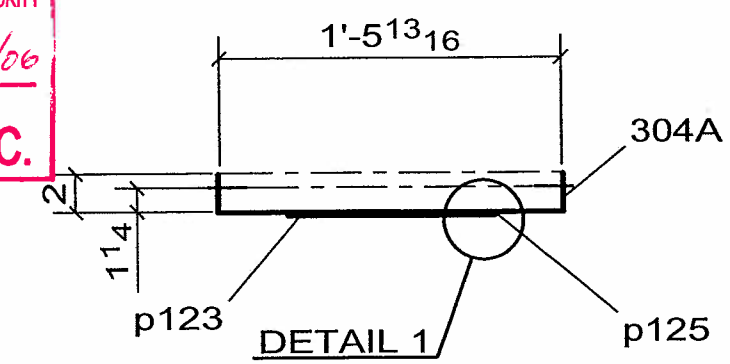

DETAIL 1

C - C

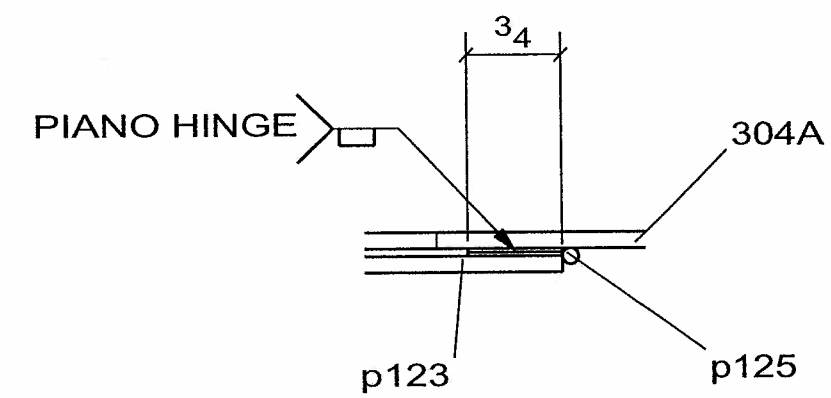

DETAIL 1

NOTE
DEBURR EDGES

WELD NOTE FOR ANY ASSEMBLY REQUIRING TACK WELDS:
- ALL TACK WELDS ARE TO BE MADE IN THE WELD JOINT ONLY

REV	DATE	DESCRIPTION	
0	SEP/10/06	FOR APPROVAL	VS

2 - SS_COVER -304A

No to SHIP	SHIP MARK	No PIECES	PIECE MARKS	DESCRIPTION	LENGTH	GRADE	REMARKS	WEIGHT	ADVANCE BILL
2	304A			SS_COVER		BRUSHED FINISH		26	
		2	304A	PL[redacted]21 13/16 X 11 GA	2'-6 1/2"	A304	BEND	21	
		2	p123	FB[redacted]11 X 11 GA	0'-11"	A304		4	
		2	p125	[redacted] SS PIANO HINGE	0'-11"	A304	W / HOLES	0	
		[redacted]						0	
		2	p128	ROD1/4	0'-3 3/8"	A304	BEND	0	

CONTRACTOR NOTE:
THIS DRAWING IS BEING SUBMITTED FOR APPROVAL AS REQUIRED. VERIFY OR SUPPLY ALL QUANTITIES, ALL DIMENSIONS, ALL INFORMATION, & ALL CONFIGURATIONS.

PRINT RECORD

NO.	USE	DATE
	APPR.	
	APPR.	
	PURCH	
	FAB	
	FAB. OFFICE	
	Q.A.	
	DIST.	
	ERECT.	

OPEN HOLES 15/16 Ø U/N
WELD BRIDGE WELDING CODE: D1.5
STEEL AS NOTED
BOLTS
SURFACE PREP-SP
PAINT SEE SPECS
REF.DRAWING E6, E9

RAINIER WELDING
19020 NE 84TH STREET - REDMOND, WA 98053
(425) 868-1300 FAX (425) 868-8872
STEEL AND ALUMINUM FABRICATING

PROJECT TOLT BRIDGE No 1834A
THIS DRAWING INCLUDES
FOR SNOHOMISH COUNTY OFFICIAL
DRAWN DJ DATE 07/31/2006 CHK DSC DATE 09/10/2006 DWG NUMBER 2707 - 304A 0

PRO DRAFT INC. PDI# 676 : PH:(604)589-6425
DRAWINGS PREPARED ON 3D-Xsteel File Name :- A [305.A]
Model Name: 725_102_TOLT_BRIDGE_541
Plot Date: 09/10/2006 12:21:08

☒ CONFORMS TO DESIGN CONCEPT
☐ CONFORMS TO DESIGN CONCEPT WITH REVISIONS AS SHOWN
☐ NON-CONFORMING–REVISE & RESUBMIT
THIS SHOP DRAWING HAS BEEN REVIEWED FOR GENERAL CONFORMANCE WITH DESIGN CONCEPT ONLY AND DOES NOT RELIEVE THE FABRICATOR/VENDOR OF RESPONSIBILITY FOR CONFORMANCE WITH DESIGN DRAWINGS AND SPECIFICATIONS ALL OF WHICH HAVE PRIORITY OVER THIS SHOP DRAWING.
By A.F. Date 10-13-06
LIN & ASSOCIATES, INC.

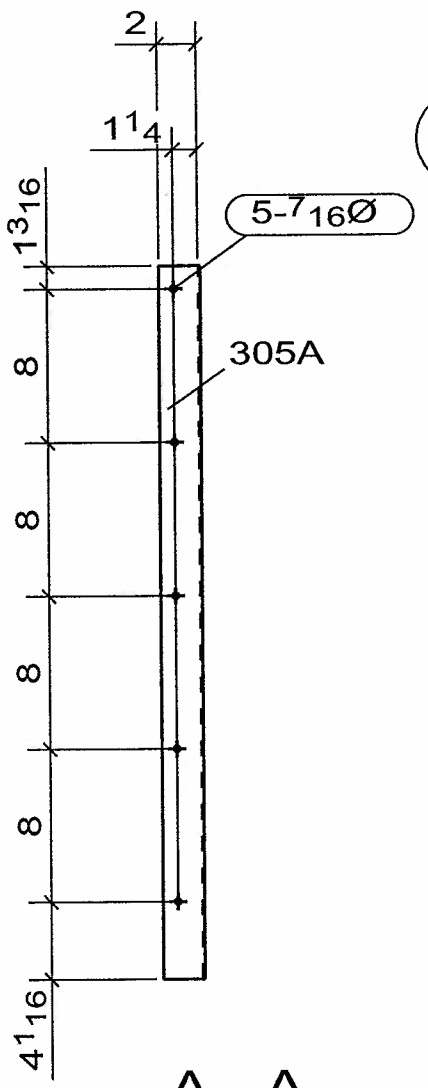

A - A

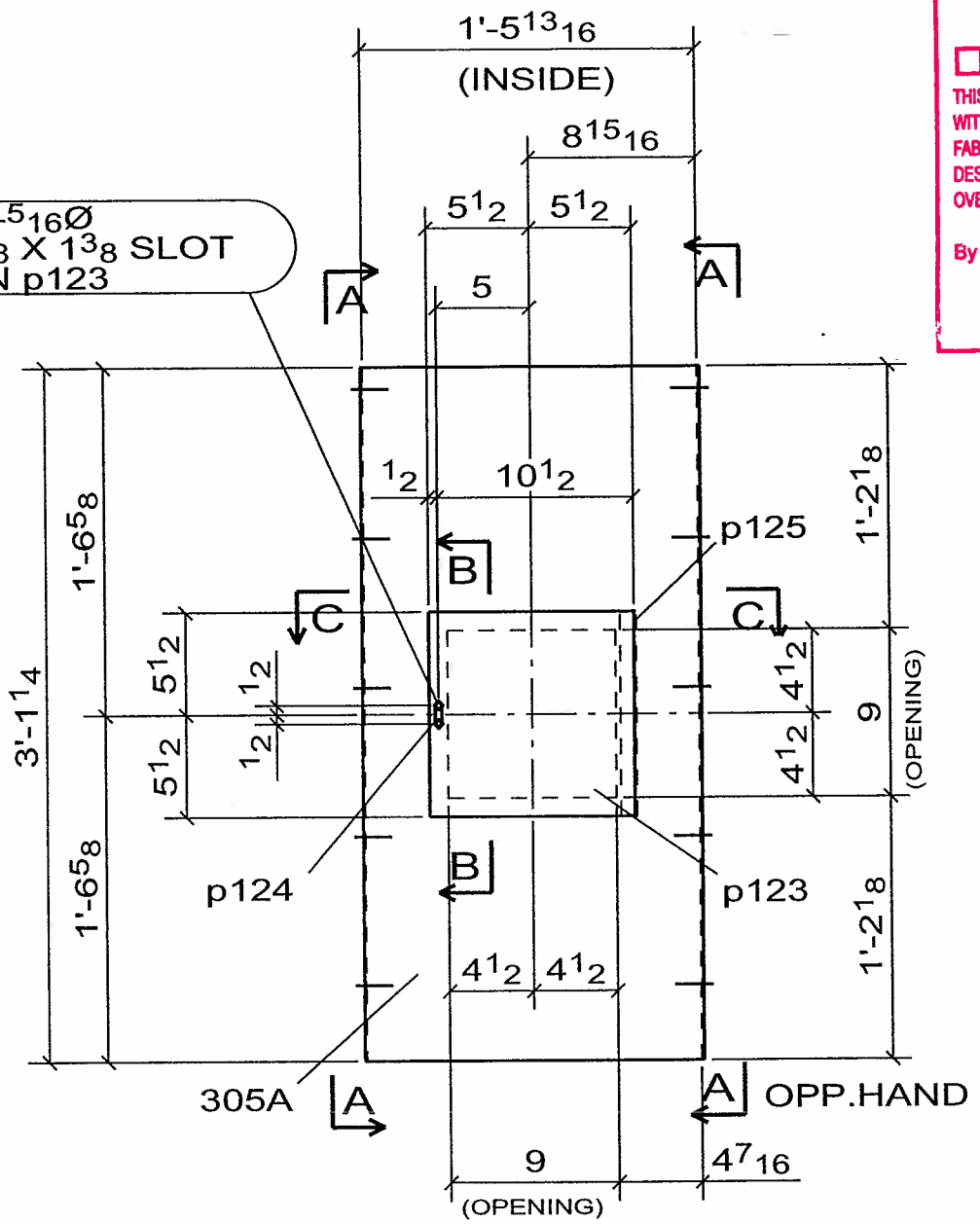

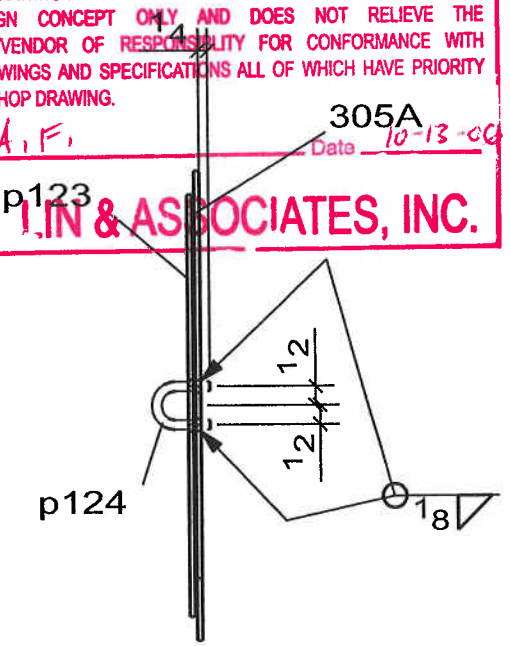

B - B

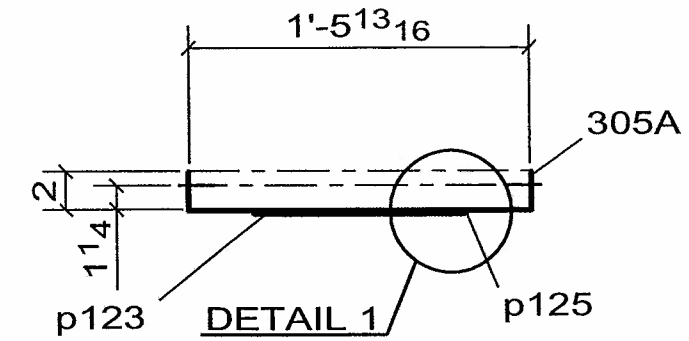

C - C

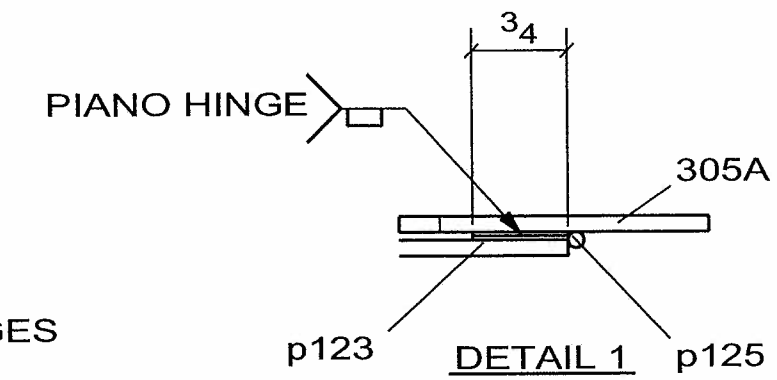

NOTE

DEBURR EDGES

WELD NOTE FOR ANY ASSEMBLY REQUIRING TACK WELDS:
- ALL TACK WELDS ARE TO BE MADE IN THE WELD JOINT ONLY

2 - SS_COVER -305A

No to SHIP	SHIP MARK	No PIECES	PIECE MARKS	DESCRIPTION	LENGTH	GRADE	REMARKS	WEIGHT	ADVANCE BILL
2	305A			SS_COVER			BRUSHED FINISH	31	
		2	305A	PL[redacted]21 13/16 X 11 GA	3'-1 1/4"	A304	BEND	27	
		2	p123	FB[redacted]11 X 11 GA	0'-11"	A304		4	
		2	p124	ROD1/4	0'-3 3/8"	A304	BEND	0	
		2	p125	[redacted] SS PIANO HINGE	0'-11"	A304	W / HOLES	0	
		[redacted]						0	

CONTRACTOR NOTE:
THIS DRAWING IS BEING SUBMITTED FOR APPROVAL AS REQUIRED. VERIFY OR SUPPLY ALL QUANTITIES, ALL DIMENSIONS, ALL INFORMATION, & ALL CONFIGURATIONS.

PRINT RECORD

NO.	USE	DATE
	APPR.	
	APPR.	
	PURCH	
	FAB	
	FAB. OFFICE	
	Q.A.	
	DIST.	
	ERECT.	

OPEN HOLES: 15/16 Ø U/N
WELD: BRIDGE WELDING CODE: D1.5
STEEL: AS NOTED
BOLTS:
SURFACE PREP-SP
PAINT: SEE SPECS
REF.DRAWING: E6, E9

REV	DATE	DESCRIPTION	
0	SEP/10/06	FOR APPROVAL	VS

RAINIER WELDING

19020 NE 84TH STREET - REDMOND, WA 98053
(425) 868-1300 FAX (425) 868-8872
STEEL AND ALUMINUM FABRICATING

PROJECT: TOLT BRIDGE No 1834A
THIS DRAWING INCLUDES:
FOR: SNOHOMISH COUNTY OFFICIAL

DRAWN DJ DATE 07/31/2006 | CHK DSC DATE 09/10/2006 | DWG NUMBER 2707 - 305A | 0

PRO DRAFT INC. PDI# 676 : PH:(604)589-6425
DRAWINGS PREPARED ON 3D-Xsteel File Name :- A [306.A]
Model Name: 725_102_TOLT_BRIDGE_541
Plot Date: 09/10/2006 12:21:09

☒ CONFORMS TO DESIGN CONCEPT
☐ CONFORMS TO DESIGN CONCEPT WITH REVISIONS AS SHOWN
☐ NON-CONFORMING–REVISE & RESUBMIT
THIS SHOP DRAWING HAS BEEN REVIEWED FOR GENERAL CONFORMANCE WITH DESIGN CONCEPT ONLY AND DOES NOT RELIEVE THE FABRICATOR/VENDOR OF RESPONSIBLITY FOR CONFORMANCE WITH DESIGN DRAWINGS AND SPECIFICATIONS ALL OF WHICH HAVE PRIORITY OVER THIS SHOP DRAWING.
By A.F Date 10-13-06
LIN & ASSOCIATES, INC.

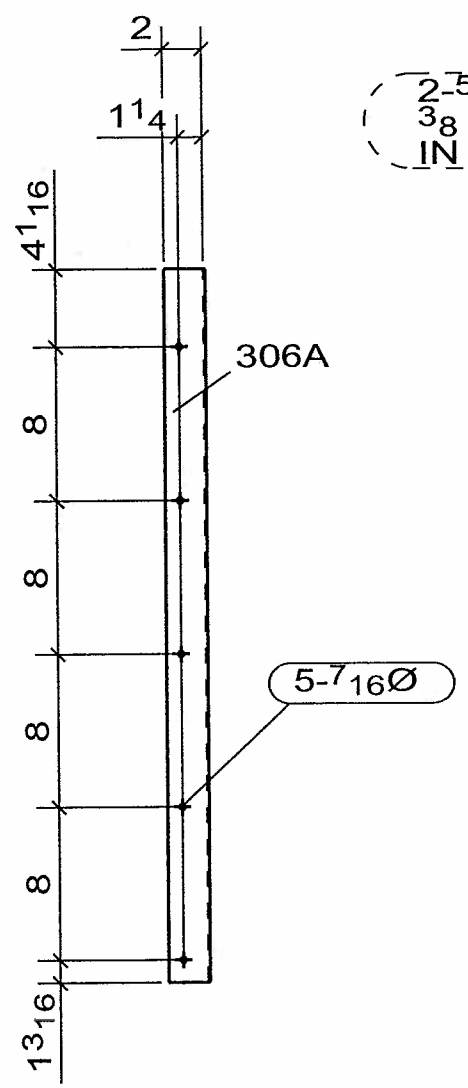

A - A

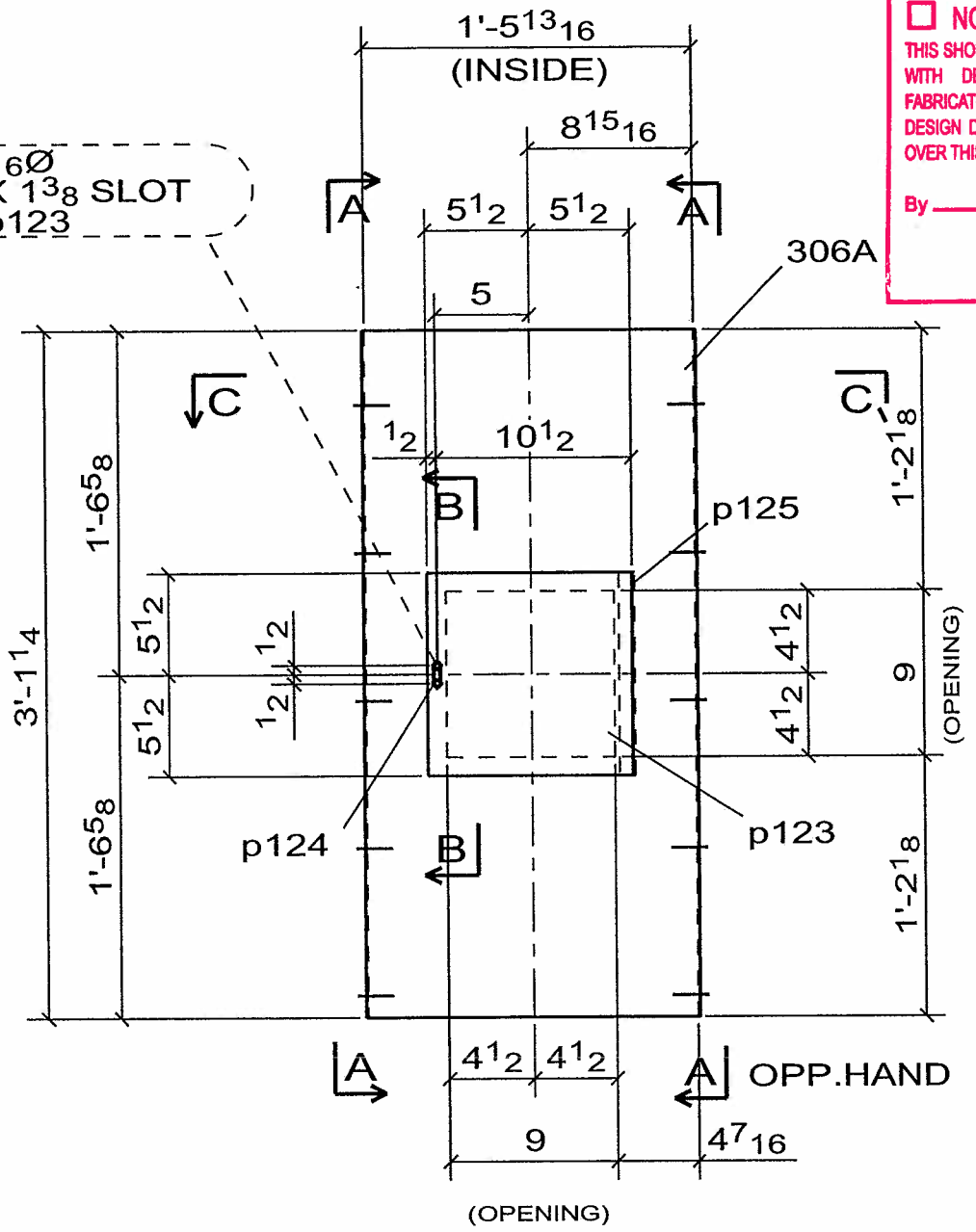

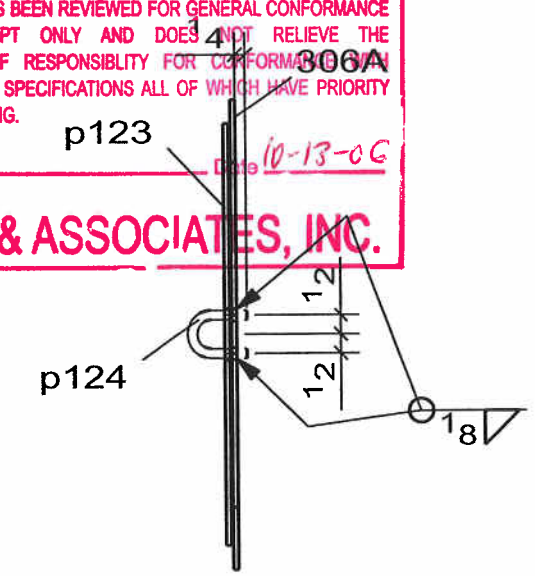

B - B

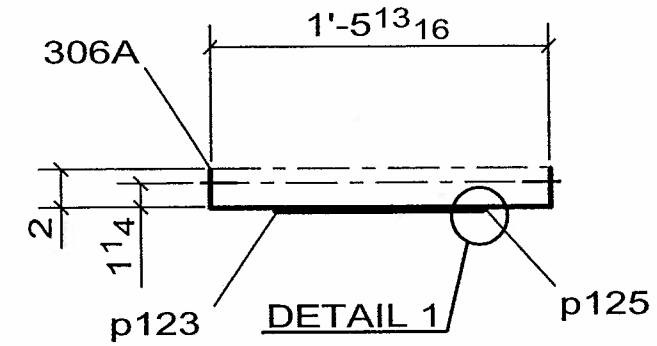

C - C

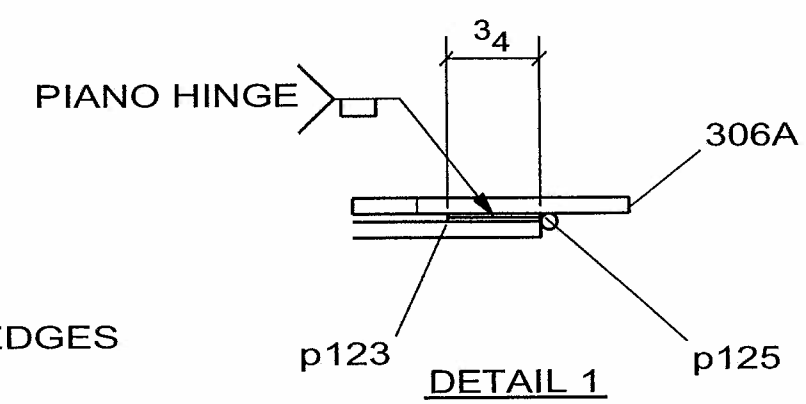

NOTE
DEBURR EDGES

WELD NOTE FOR ANY ASSEMBLY REQUIRING TACK WELDS:
- ALL TACK WELDS ARE TO BE MADE IN THE WELD JOINT ONLY

2 - SS_COVER -306A

No to SHIP	SHIP MARK	No PIECES	PIECE MARKS	DESCRIPTION	LENGTH	GRADE	REMARKS	WEIGHT	ADVANCE BILL
2	306A			SS_COVER			BRUSHED FINISH	31	
		2	306A	PL[redacted]21 13/16 X 11 GA	3'-1 1/4"	A304	BEND	27	
		2	p123	FB[redacted]11 X 11 GA	0'-11"	A304		4	
		2	p124	ROD1/4	0'-3 3/8"	A304	BEND	0	
		2	p125	[redacted] SS PIANO HINGE	0'-11"	A304	W / HOLES	0	
		[redacted]						0	

CONTRACTOR NOTE:
THIS DRAWING IS BEING SUBMITTED FOR APPROVAL AS REQUIRED. VERIFY OR SUPPLY ALL QUANTITIES, ALL DIMENSIONS, ALL INFORMATION, & ALL CONFIGURATIONS.

PRINT RECORD

NO.	USE	DATE
	APPR.	
	APPR.	
	PURCH	
	FAB	
	FAB. OFFICE	
	Q.A.	
	DIST.	
	ERECT.	

OPEN HOLES 15/16 Ø U/N
WELD BRIDGE WELDING CODE: D1.5
STEEL AS NOTED
BOLTS
SURFACE PREP-SP
PAINT SEE SPECS
REF.DRAWING E7, E8

REV	DATE	DESCRIPTION	
0	SEP/10/06	FOR APPROVAL	VS

RAINIER WELDING
19020 NE 84TH STREET - REDMOND, WA 98053
(425) 868-1300 FAX (425) 868-8872
STEEL AND ALUMINUM FABRICATING

PROJECT TOLT BRIDGE No 1834A
THIS DRAWING INCLUDES
FOR SNOHOMISH COUNTY OFFICIAL
DRAWN DJ DATE 07/31/2006 CHK DSC DATE 09/10/2006 DWG NUMBER 2707 - 306A 0

PRO DRAFT INC. PDI# 676 : PH:(604)589-6425
DRAWINGS PREPARED ON 3D-Xsteel File Name :- A [307.A]
Model Name: 725_102_TOLT_BRIDGE_541
Plot Date: 09/10/2006 12:21:10

☒ CONFORMS TO DESIGN CONCEPT
☐ CONFORMS TO DESIGN CONCEPT WITH REVISIONS AS SHOWN
☐ NON-CONFORMING–REVISE & RESUBMIT
THIS SHOP DRAWING HAS BEEN REVIEWED FOR GENERAL CONFORMANCE WITH DESIGN CONCEPT ONLY AND DOES NOT RELIEVE THE FABRICATOR/VENDOR OF RESPONSIBILITY FOR CONFORMANCE WITH DESIGN DRAWINGS AND SPECIFICATIONS, ALL OF WHICH HAVE PRIORITY OVER THIS SHOP DRAWING.
By A.F. Date 10-13-06
LIN & ASSOCIATES, INC.

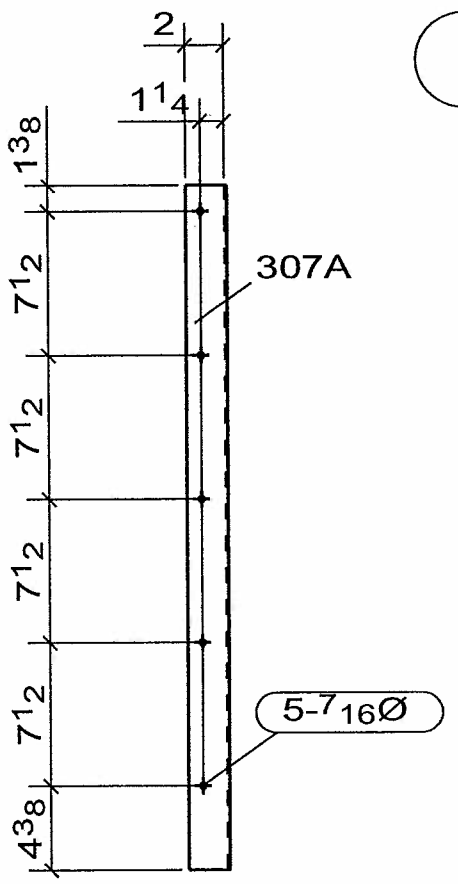

A - A

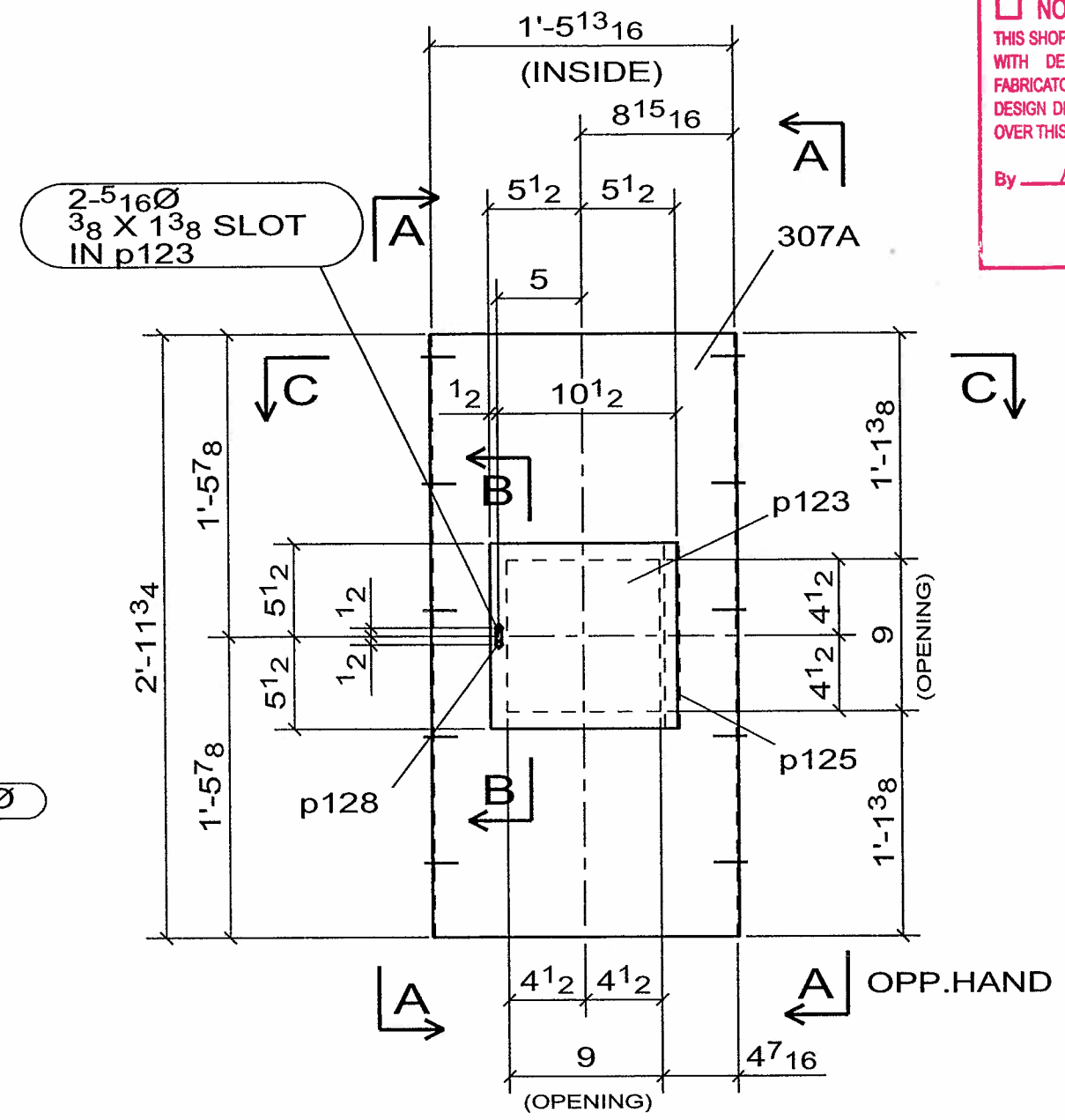

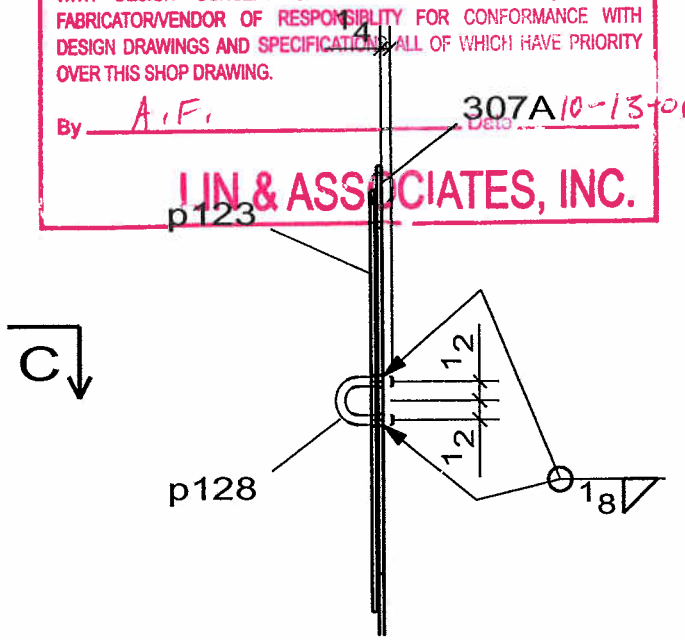

B - B

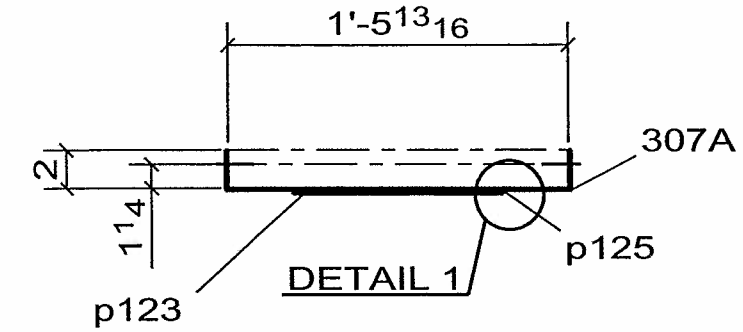

C - C

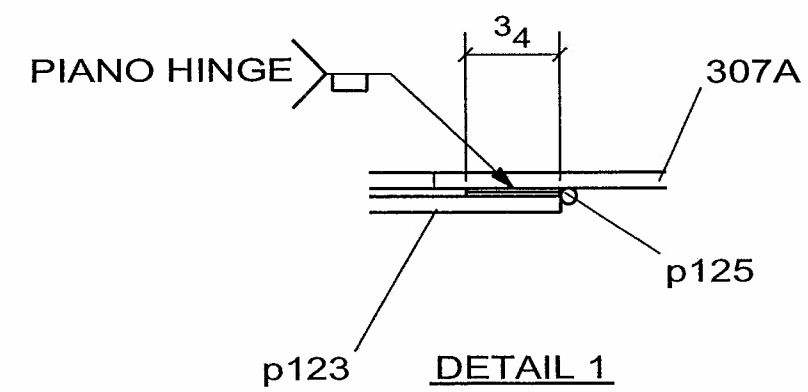

NOTE
DEBURR EDGES

WELD NOTE FOR ANY ASSEMBLY REQUIRING TACK WELDS:
- ALL TACK WELDS ARE TO BE MADE IN THE WELD JOINT ONLY

2 - SS_COVER -307A

No to SHIP	SHIP MARK	No PIECES	PIECE MARKS	DESCRIPTION	LENGTH	GRADE	REMARKS	WEIGHT	ADVANCE BILL
2	307A			SS_COVER			BRUSHED FINISH	30	
		2	307A	PL[redacted]21 13/16 X 11 GA	2'-11 3/4"	A304	BEND	25	
		2	p123	FB[redacted]11 X 11 GA	0'-11"	A304		4	
		2	p125	[redacted] SS PIANO HINGE	0'-11"	A304	W / HOLES	0	
		[redacted]						0	
		2	p128	ROD1/4	0'-3 3/8"	A304	BEND	0	

CONTRACTOR NOTE:
THIS DRAWING IS BEING SUBMITTED FOR APPROVAL AS REQUIRED. VERIFY OR SUPPLY ALL QUANTITIES, ALL DIMENSIONS, ALL INFORMATION, & ALL CONFIGURATIONS.

PRINT RECORD

NO.	USE	DATE
	APPR.	
	APPR.	
	PURCH	
	FAB	
	FAB. OFFICE	
	Q.A.	
	DIST.	
	ERECT.	

OPEN HOLES: 15/16 Ø U/N
WELD: BRIDGE WELDING CODE: D1.5
STEEL: AS NOTED
BOLTS:
SURFACE PREP-SP:
PAINT: SEE SPECS
REF.DRAWING: E7, E8

REV	DATE	DESCRIPTION	
0	SEP/10/06	FOR APPROVAL	VS

RAINIER WELDING

19020 NE 84TH STREET - REDMOND, WA 98053
(425) 868-1300 FAX (425) 868-8872
STEEL AND ALUMINUM FABRICATING

PROJECT: TOLT BRIDGE No 1834A
THIS DRAWING INCLUDES:
FOR: SNOHOMISH COUNTY OFFICIAL

DRAWN DJ DATE 07/31/2006 | CHK DSC DATE 09/10/2006 | DWG NUMBER 2707 - 307A | 0

PRO DRAFT INC. PDI# 676 : PH:(604)589-6425
DRAWINGS PREPARED ON 3D-Xsteel File Name :- A [308.A]
Model Name: 725_102_TOLT_BRIDGE_541
Plot Date: 09/10/2006 12:21:11

☒ CONFORMS TO DESIGN CONCEPT
☐ CONFORMS TO DESIGN CONCEPT WITH REVISIONS AS SHOWN
☐ NON-CONFORMING–REVISE & RESUBMIT
THIS SHOP DRAWING HAS BEEN REVIEWED FOR GENERAL CONFORMANCE WITH DESIGN CONCEPT ONLY AND DOES NOT RELIEVE THE FABRICATOR/VENDOR OF RESPONSIBILITY FOR CONFORMANCE WITH DESIGN DRAWINGS AND SPECIFICATIONS ALL OF WHICH HAVE PRIORITY OVER THIS SHOP DRAWING.
By A.F. Date 10-13-06
LIN & ASSOCIATES, INC.

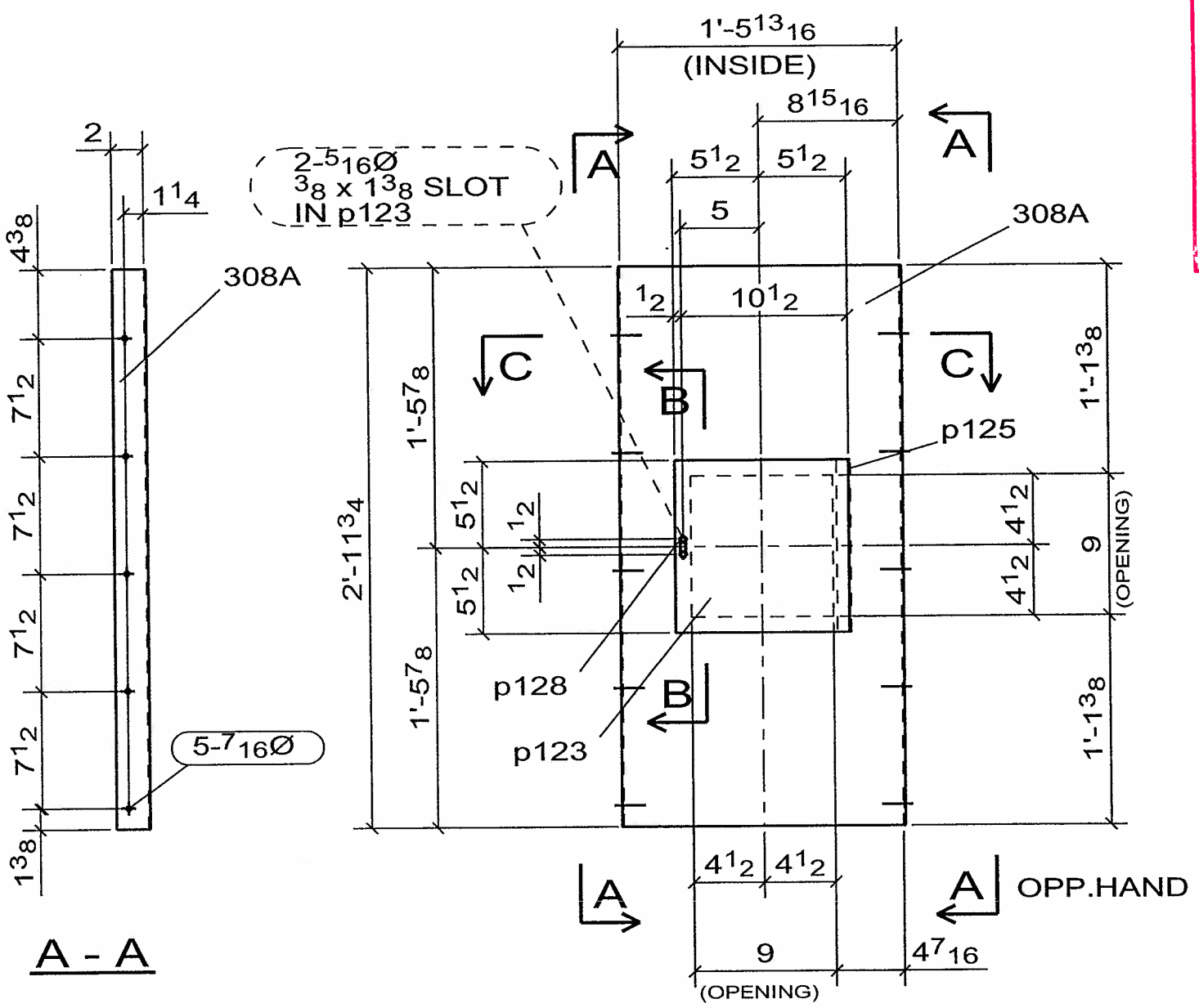

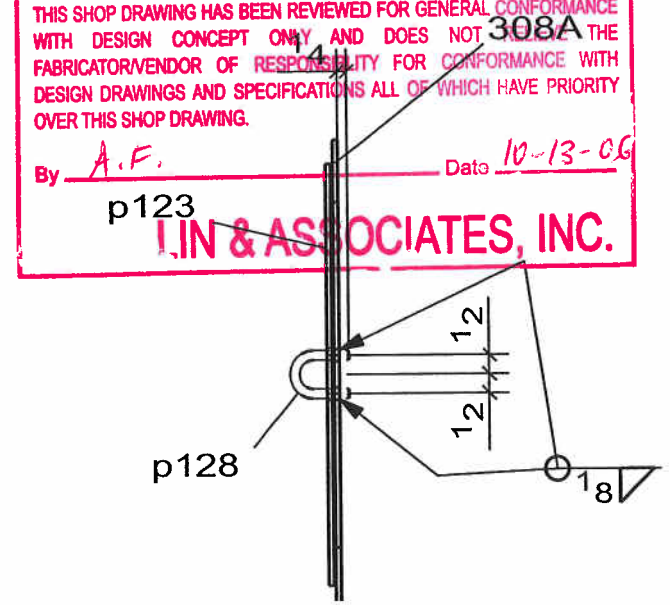

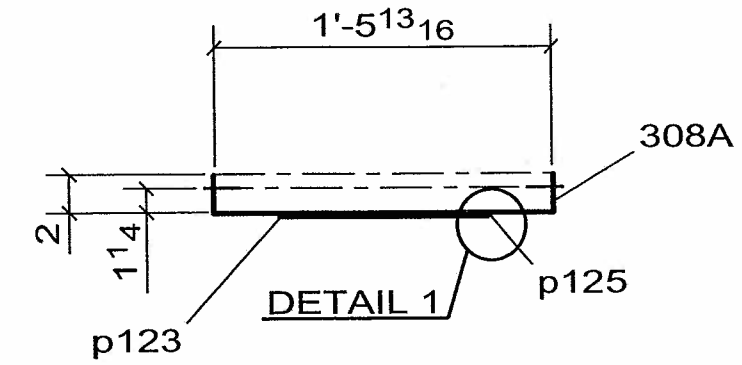

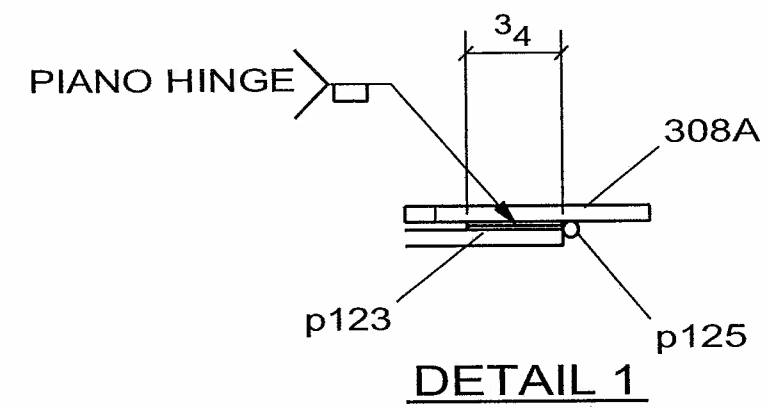

NOTE
DEBURR EDGES

WELD NOTE FOR ANY ASSEMBLY REQUIRING TACK WELDS:
- ALL TACK WELDS ARE TO BE MADE IN THE WELD JOINT ONLY

2 - SS_COVER - 308A

No to SHIP	SHIP MARK	No PIECES	PIECE MARKS	DESCRIPTION	LENGTH	GRADE	REMARKS	WEIGHT	ADVANCE BILL
2	308A			SS_COVER		BRUSHED FINISH		30	
		2	308A	PL[redacted]21 13/16 X 11 GA	2'-11 3/4"	A304	BEND	25	
		2	p123	FB[redacted]11 X 11 GA	0'-11"	A304		4	
		2	p125	[redacted] SS PIANO HINGE	0'-11"	A304	W / HOLES	0	
		[redacted]						0	
		2	p128	ROD1/4	0'-3 3/8"	A304	BEND	0	

CONTRACTOR NOTE:
THIS DRAWING IS BEING SUBMITTED FOR APPROVAL AS REQUIRED. VERIFY OR SUPPLY ALL QUANTITIES, ALL DIMENSIONS, ALL INFORMATION, & ALL CONFIGURATIONS.

PRINT RECORD

NO.	USE	DATE
	APPR.	
	APPR.	
	PURCH	
	FAB	
	FAB. OFFICE	
	Q.A.	
	DIST.	
	ERECT.	

OPEN HOLES: 15/16 Ø U/N
WELD: BRIDGE WELDING CODE: D1.5
STEEL: AS NOTED
BOLTS:
SURFACE PREP-SP:
PAINT: SEE SPECS
REF.DRAWING: E6, E9

REV	DATE	DESCRIPTION	
0	SEP/10/06	FOR APPROVAL	VS

RAINIER WELDING

19020 NE 84TH STREET - REDMOND, WA 98053
(425) 868-1300 FAX (425) 868-8872
STEEL AND ALUMINUM FABRICATING

PROJECT: TOLT BRIDGE No 1834A
THIS DRAWING INCLUDES:
FOR: SNOHOMISH COUNTY OFFICIAL

DRAWN DJ DATE 07/31/2006 | CHK DSC DATE 09/10/2006 | DWG NUMBER 2707 - 308A | 0

PRO DRAFT INC. PDI# 676 : PH:(604)589-6425
DRAWINGS PREPARED ON 3D-Xsteel File Name :- A [309.A]
Model Name: 725_102_TOLT_BRIDGE_541
Plot Date: 09/10/2006 12:21:13

☐ CONFORMS TO DESIGN CONCEPT
☒ CONFORMS TO DESIGN CONCEPT WITH REVISIONS AS SHOWN
☐ NON-CONFORMING–REVISE & RESUBMIT
THIS SHOP DRAWING HAS BEEN REVIEWED FOR GENERAL CONFORMANCE WITH DESIGN CONCEPT ONLY AND DOES NOT RELIEVE THE FABRICATOR/VENDOR OF RESPONSIBILITY FOR CONFORMANCE WITH DESIGN DRAWINGS AND SPECIFICATIONS, ALL OF WHICH HAVE PRIORITY OVER THIS SHOP DRAWING.
By A.F. Date 10/13/06
LIN & ASSOCIATES, INC.

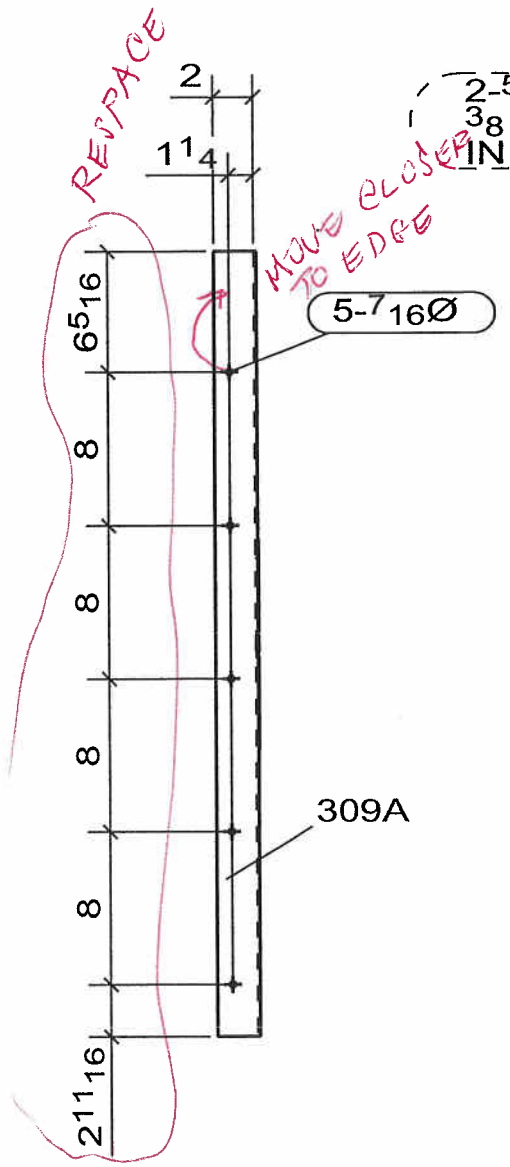

A-A

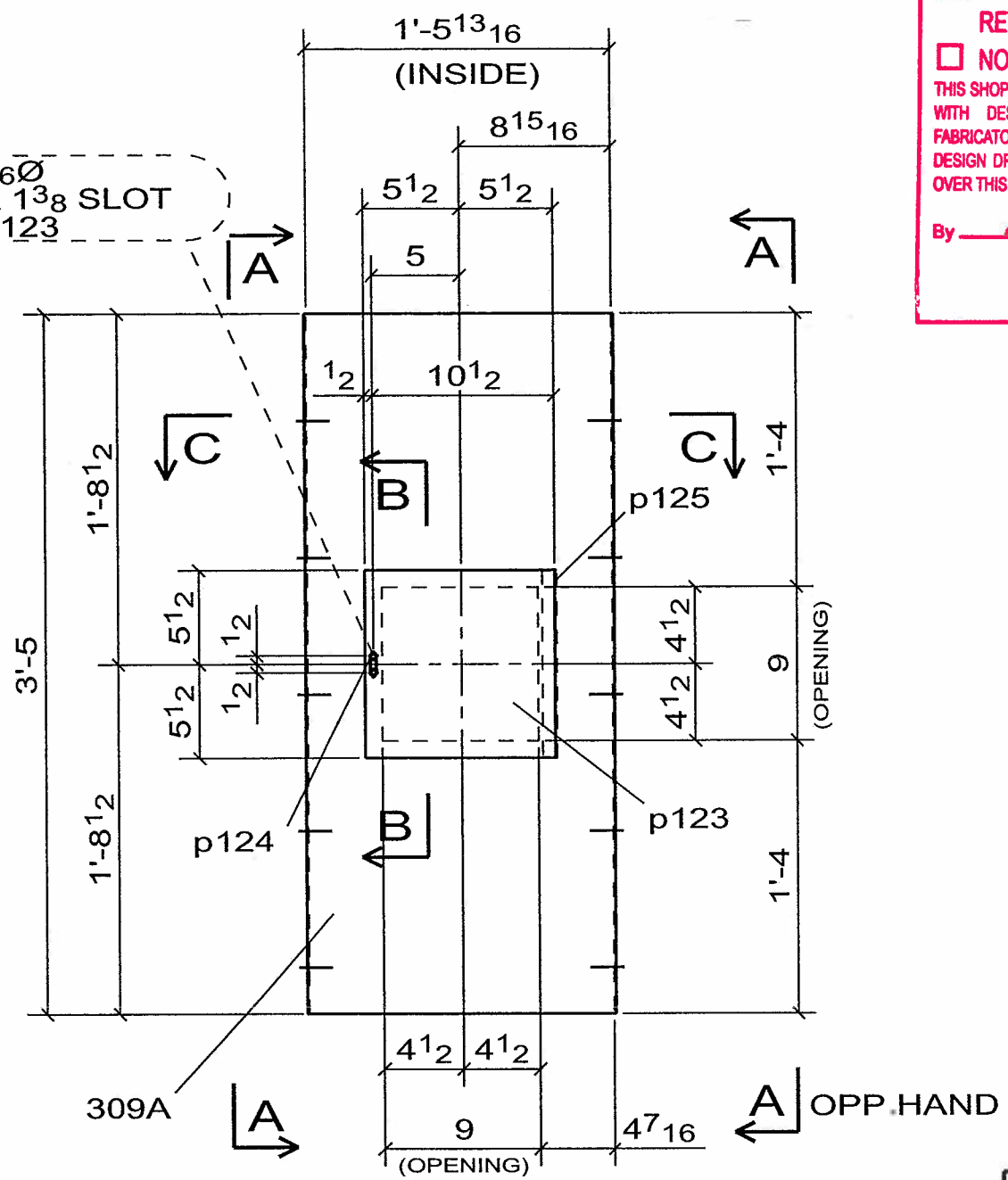

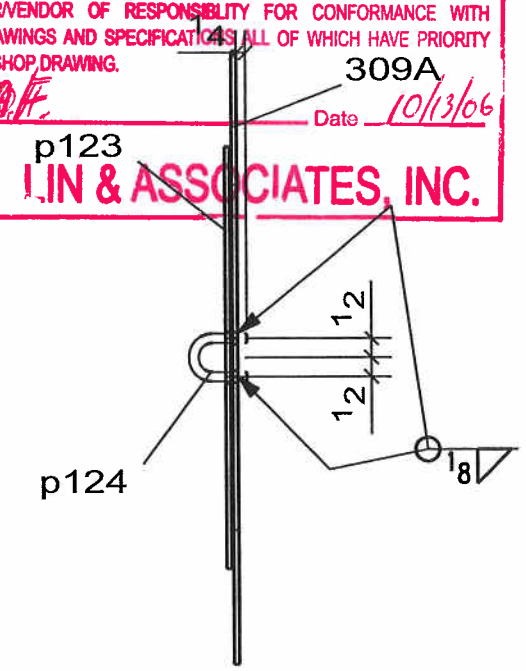

B-B

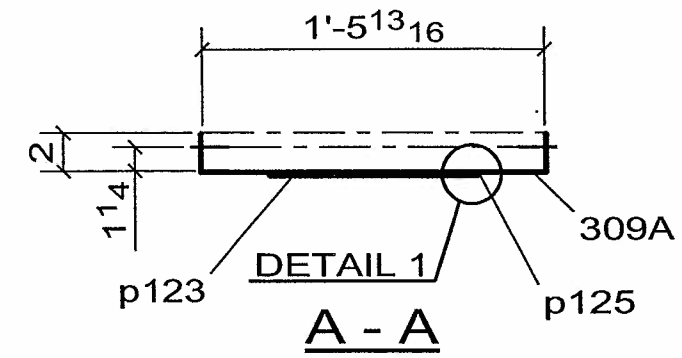

A - A

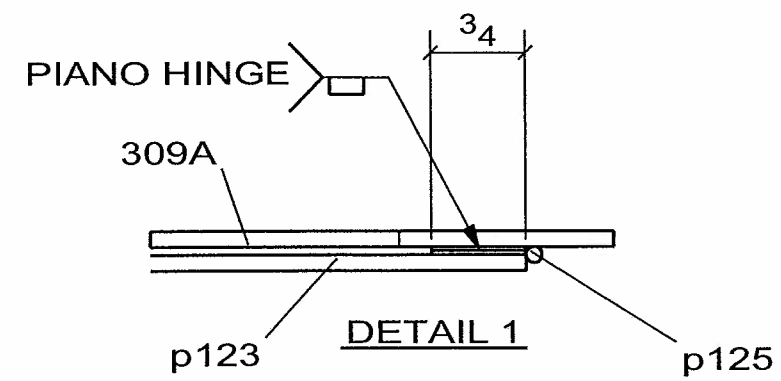

NOTE

DEBURR EDGES

WELD NOTE FOR ANY ASSEMBLY REQUIRING TACK WELDS:
- ALL TACK WELDS ARE TO BE MADE IN THE WELD JOINT ONLY

2 - SS_COVER -309A

No to SHIP	SHIP MARK	No PIECES	PIECE MARKS	DESCRIPTION	LENGTH	GRADE	REMARKS	WEIGHT	ADVANCE BILL
2	309A			SS_COVER			BRUSHED FINISH	34	
		2	309A	PL[redacted]21 13/16 X 11 GA	3'-5"	A304	BEND	30	
		2	p123	FB[redacted]11 X 11 GA	0'-11"	A304		4	
		2	p124	ROD1/4	0'-3 3/8"	A304	BEND	0	
		2	p125	[redacted] SS PIANO HINGE	0'-11"	A304	W / HOLES	0	
		[redacted]						0	

CONTRACTOR NOTE:
THIS DRAWING IS BEING SUBMITTED FOR APPROVAL AS REQUIRED. VERIFY OR SUPPLY ALL QUANTITIES, ALL DIMENSIONS, ALL INFORMATION, & ALL CONFIGURATIONS.

PRINT RECORD

NO.	USE	DATE
	APPR.	
	APPR.	
	PURCH	
	FAB	
	FAB. OFFICE	
	Q.A.	
	DIST.	
	ERECT.	

OPEN HOLES: 15/16 Ø U/N
WELD: BRIDGE WELDING CODE: D1.5
STEEL: AS NOTED
BOLTS:
SURFACE PREP-SP:
PAINT: SEE SPECS
REF.DRAWING: E6, E9

REV	DATE	DESCRIPTION	
0	SEP/10/06	FOR APPROVAL	VS

RAINIER WELDING

19020 NE 84TH STREET - REDMOND, WA 98053
(425) 868-1300 FAX (425) 868-8872
STEEL AND ALUMINUM FABRICATING

PROJECT: TOLT BRIDGE No 1834A
THIS DRAWING INCLUDES:
FOR: SNOHOMISH COUNTY OFFICIAL
DRAWN DJ DATE 07/31/2006 CHK DSC DATE 09/10/2006 DWG NUMBER 2707 - 309A 0

PRO DRAFT INC. PDI# 676 : PH:(604)589-6425
DRAWINGS PREPARED ON 3D-Xsteel File Name :- A [310.A]
Model Name: 725_102_TOLT_BRIDGE_541
Plot Date: 09/10/2006 12:21:14

☐ CONFORMS TO DESIGN CONCEPT
☒ CONFORMS TO DESIGN CONCEPT WITH REVISIONS AS SHOWN
☐ NON-CONFORMING–REVISE & RESUBMIT
THIS SHOP DRAWING HAS BEEN REVIEWED FOR GENERAL CONFORMANCE WITH DESIGN CONCEPT ONLY AND DOES NOT RELIEVE THE FABRICATOR/VENDOR OF RESPONSIBLITY FOR CONFORMANCE WITH DESIGN DRAWINGS AND SPECIFICATIONS ALL OF WHICH HAVE PRIORITY OVER THIS SHOP DRAWING.
By A.F. Date 10/13/06
LIN & ASSOCIATES, INC.

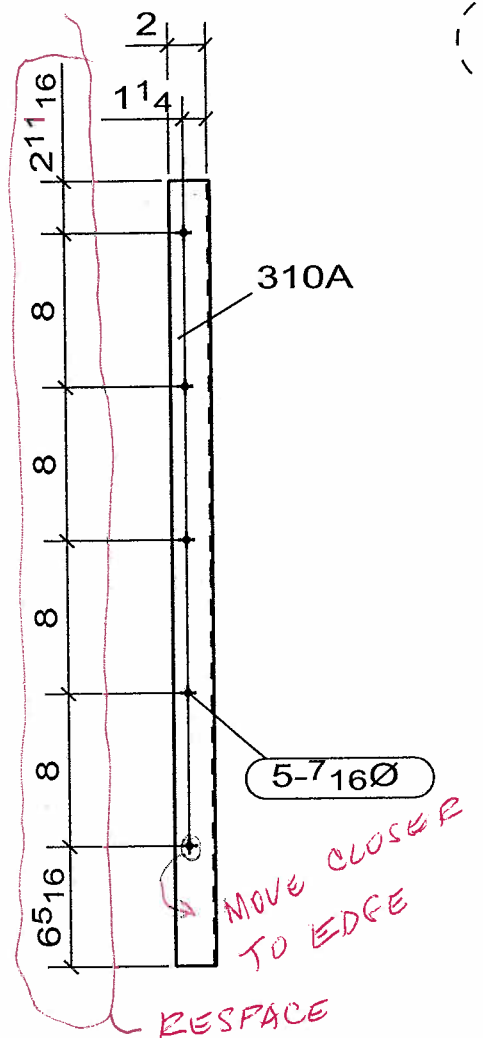

A-A

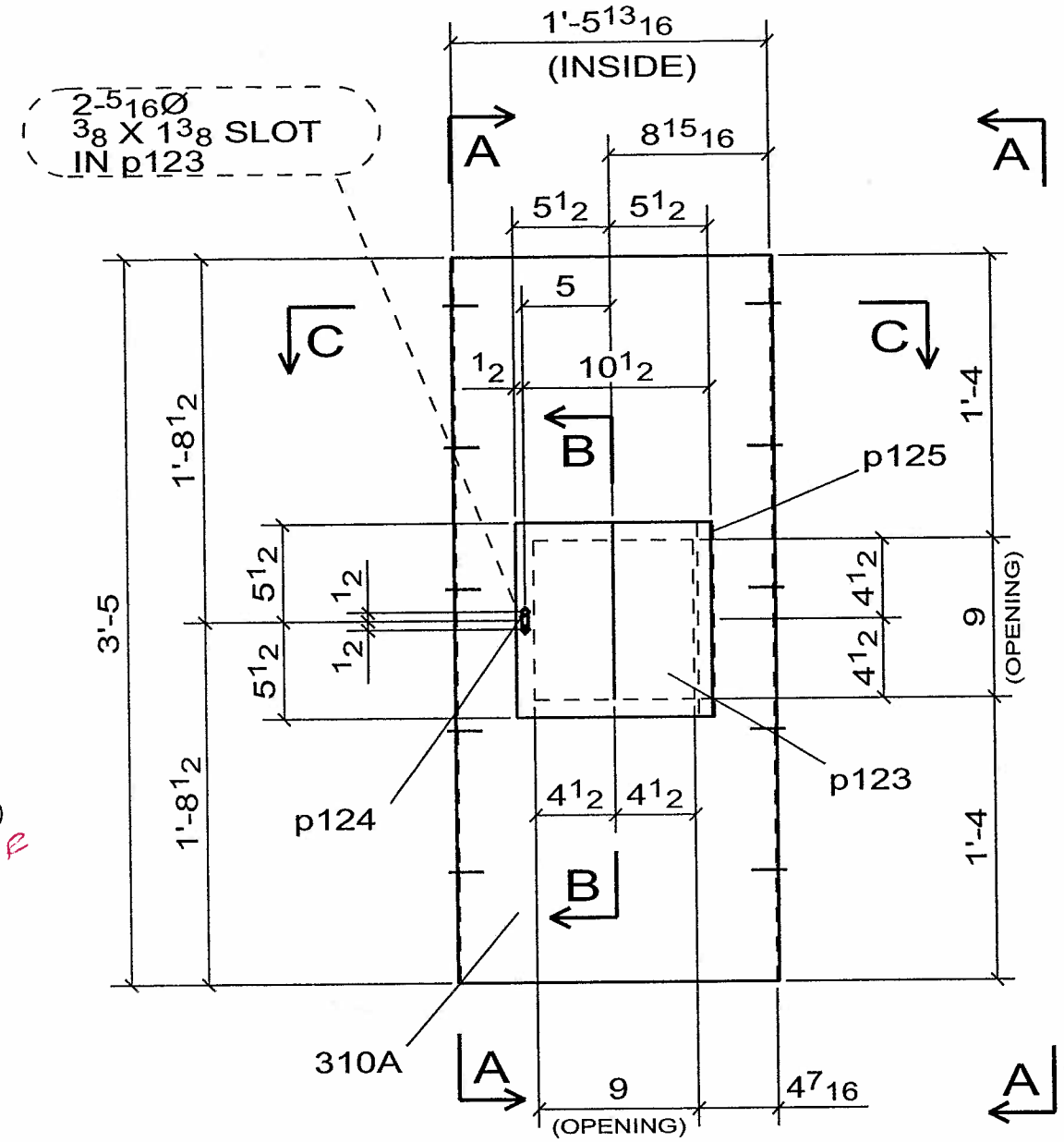

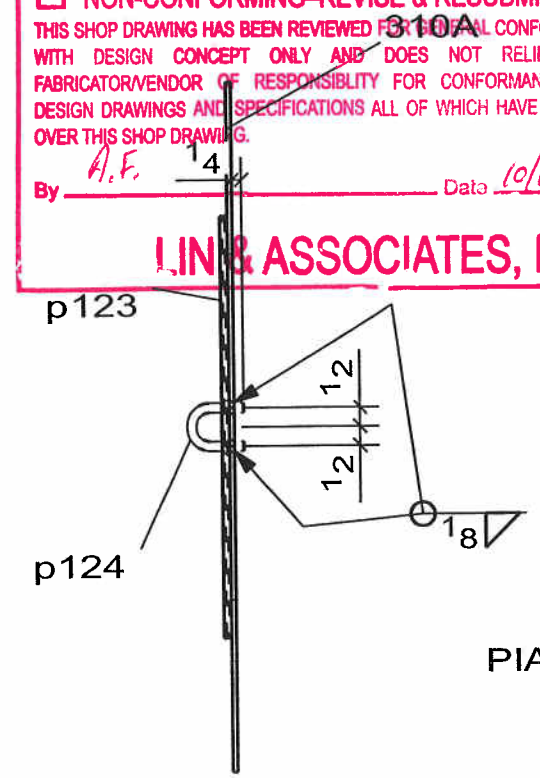

B - B

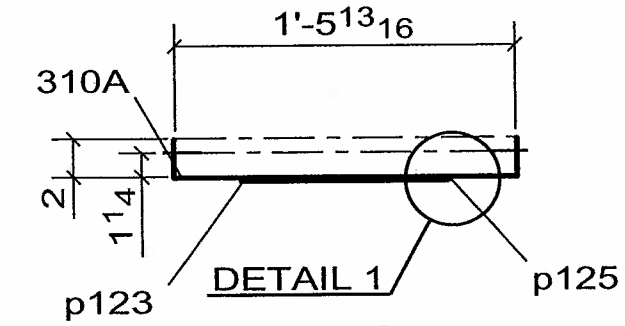

DETAIL 1

C-C

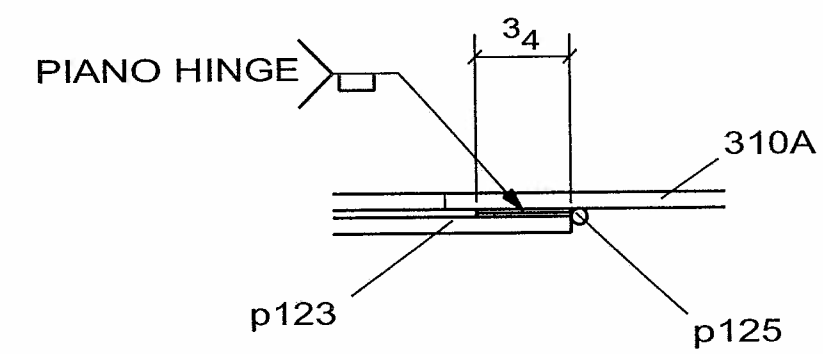

DETAIL 1

NOTE
DEBURR EDGES

WELD NOTE FOR ANY ASSEMBLY REQUIRING TACK WELDS:
- ALL TACK WELDS ARE TO BE MADE IN THE WELD JOINT ONLY

CONTRACTOR NOTE:
THIS DRAWING IS BEING SUBMITTED FOR APPROVAL AS REQUIRED. VERIFY OR SUPPLY ALL QUANTITIES, ALL DIMENSIONS, ALL INFORMATION, & ALL CONFIGURATIONS.

PRINT RECORD

NO.	USE	DATE
	APPR.	
	APPR.	
	PURCH	
	FAB	
	FAB. OFFICE	
	Q.A.	
	DIST.	
	ERECT.	

OPEN HOLES: 15/16 Ø U/N
WELD: BRIDGE WELDING CODE: D1.5
STEEL: AS NOTED
BOLTS:
SURFACE PREP-SP:
PAINT: SEE SPECS
REF.DRAWING: E7

REV	DATE	DESCRIPTION	
0	SEP/10/06	FOR APPROVAL	VS

RAINIER WELDING

19020 NE 84TH STREET - REDMOND, WA 98053
(425) 868-1300 FAX (425) 868-8872
STEEL AND ALUMINUM FABRICATING

PROJECT: TOLT BRIDGE No 1834A
THIS DRAWING INCLUDES:
FOR: SNOHOMISH COUNTY OFFICIAL
DRAWN: DJ DATE: 07/31/2006
CHK: DSC DATE: 09/10/2006
DWG NUMBER: 2707 - 310A
0

1 - SS_COVER -310A

No to SHIP	SHIP MARK	No PIECES	PIECE MARKS	DESCRIPTION	LENGTH	GRADE	REMARKS	WEIGHT	ADVANCE BILL
1	310A			SS_COVER		BRUSHED FINISH		34	
		1	310A	PL[redacted]21 13/16 X 11 GA	3'-5"	A304	BEND	30	
		1	p123	FB[redacted]11 X 11 GA	0'-11"	A304		4	
		1	p124	ROD1/4	0'-3 3/8"	A304	BEND	0	
		1	p125	[redacted] SS PIANO HINGE	0'-11"	A304	W / HOLES	0	
		[redacted]						0	

☒ CONFORMS TO DESIGN CONCEPT
☐ CONFORMS TO DESIGN CONCEPT WITH REVISIONS AS SHOWN
☐ NON-CONFORMING–REVISE & RESUBMIT

THIS SHOP DRAWING HAS BEEN REVIEWED FOR GENERAL CONFORMANCE WITH DESIGN CONCEPT ONLY AND DOES NOT RELIEVE THE FABRICATOR/VENDOR OF RESPONSIBLITY FOR CONFORMANCE WITH DESIGN DRAWINGS AND SPECIFICATIONS ALL OF WHICH HAVE PRIORITY OVER THIS SHOP DRAWING.

By A.F. Date 10-13-06

LIN & ASSOCIATES, INC.

PRO DRAFT INC. PDI# 676 : PH:(604)589-6425
DRAWINGS PREPARED ON 3D-Xsteel File Name :- A [311.A]
Model Name: 725_102_TOLT_BRIDGE_541
Plot Date: 09/10/2006 12:21:16

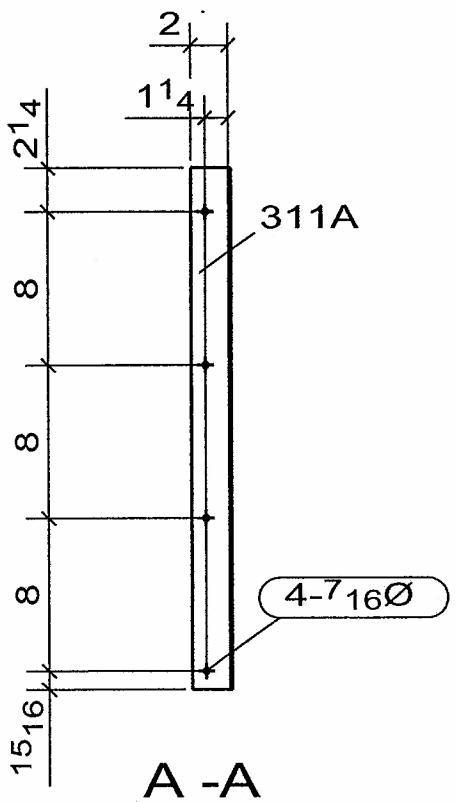

A -A

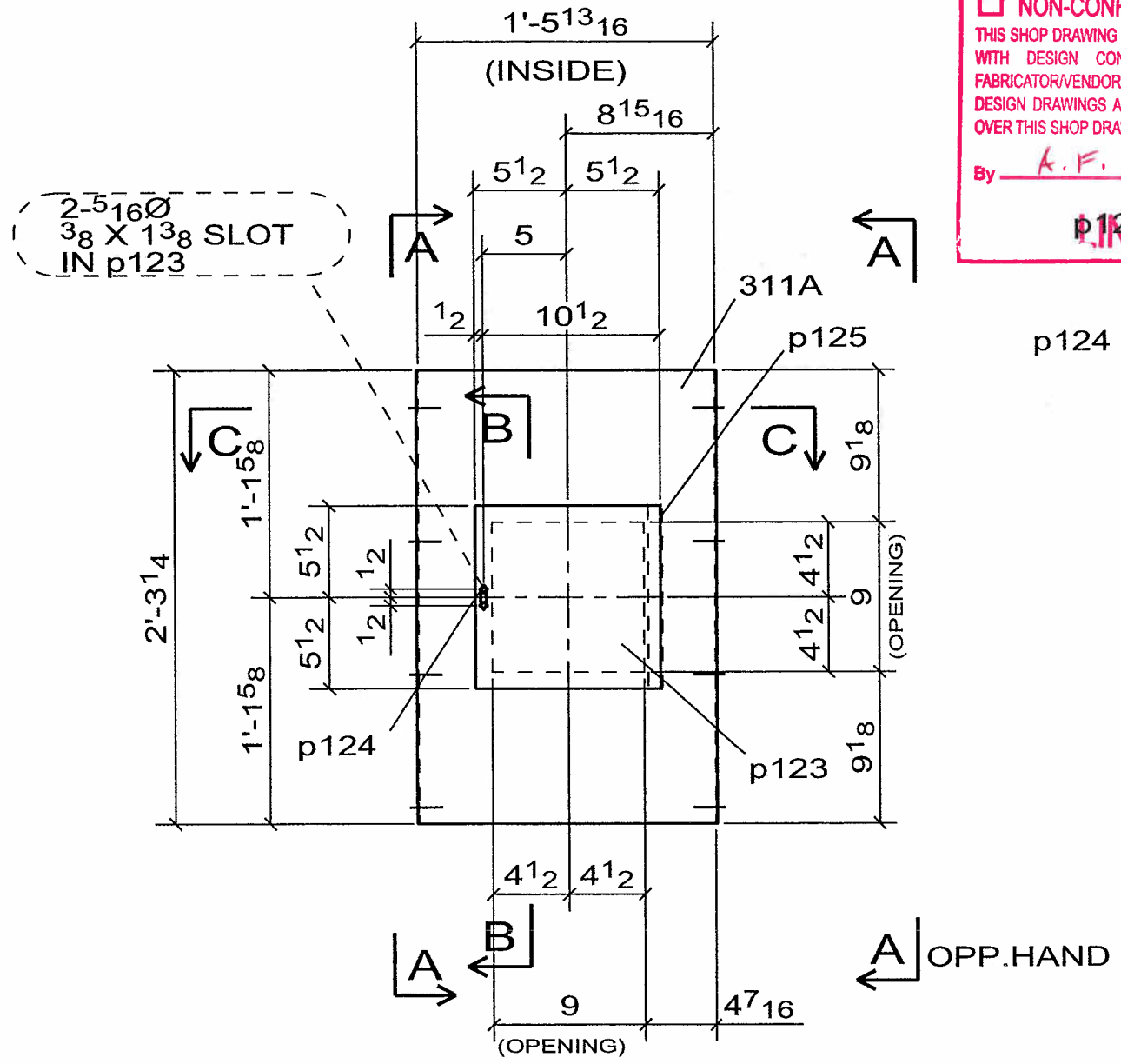

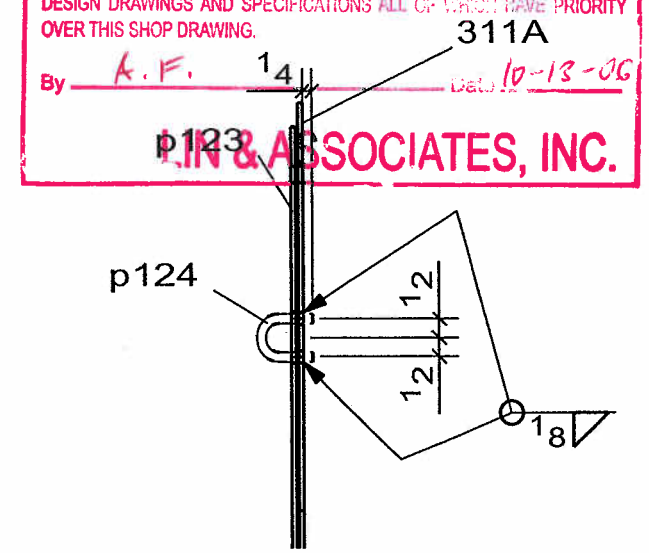

B - B

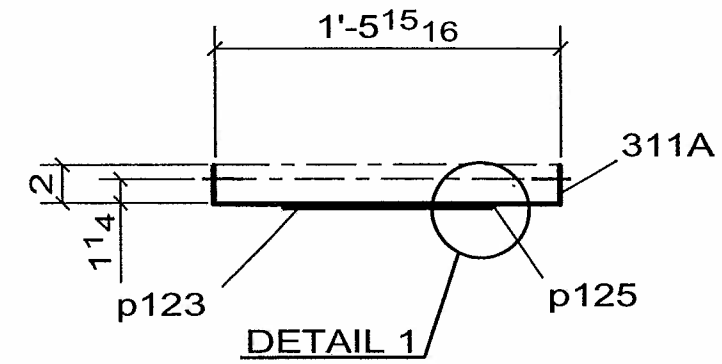

DETAIL 1

C-C

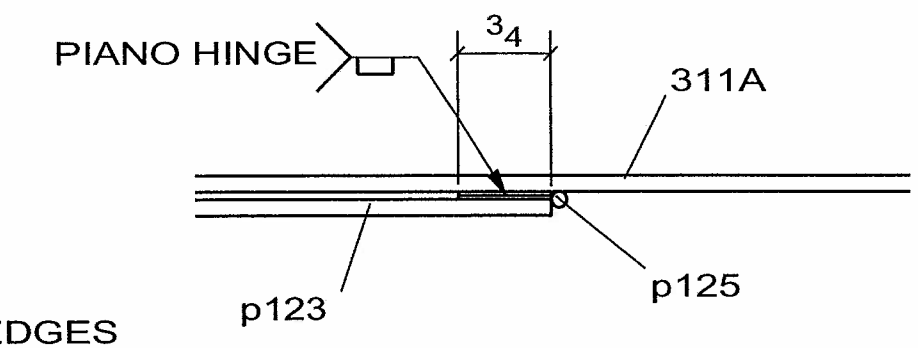

DETAIL 1

NOTE
DEBURR EDGES

WELD NOTE FOR ANY ASSEMBLY REQUIRING TACK WELDS:
- ALL TACK WELDS ARE TO BE MADE IN THE WELD JOINT ONLY

2 - SS_COVER -311A

No to SHIP	SHIP MARK	No PIECES	PIECE MARKS	DESCRIPTION	LENGTH	GRADE	REMARKS	WEIGHT	ADVANCE BILL
2	311A			SS_COVER		BRUSHED FINISH		23	
		2	311A	PL[redacted]21 13/16 X 11 GA	2'-3 1/4"	A304	BEND	19	
		2	p123	FB[redacted]11 X 11 GA	0'-11"	A304		4	
		2	p124	ROD1/4	0'-3 3/8"	A304	BEND	0	
		2	p125	[redacted] SS PIANO HINGE	0'-11"	A304	W / HOLES	0	
		[redacted]						0	

CONTRACTOR NOTE:
THIS DRAWING IS BEING SUBMITTED FOR APPROVAL AS REQUIRED. VERIFY OR SUPPLY ALL QUANTITIES, ALL DIMENSIONS, ALL INFORMATION, & ALL CONFIGURATIONS.

PRINT RECORD

NO.	USE	DATE
	APPR.	
	APPR.	
	PURCH	
	FAB	
	FAB. OFFICE	
	Q.A.	
	DIST.	
	ERECT.	

OPEN HOLES: 15/16 Ø U/N
WELD: BRIDGE WELDING CODE: D1.5
STEEL: AS NOTED
BOLTS:
SURFACE PREP-SP:
PAINT: SEE SPECS
REF.DRAWING: E7, E8

REV	DATE	DESCRIPTION	
0	SEP/10/06	FOR APPROVAL	VS

RAINIER WELDING

19020 NE 84TH STREET - REDMOND, WA 98053
(425) 868-1300 FAX (425) 868-8872
STEEL AND ALUMINUM FABRICATING

PROJECT: TOLT BRIDGE No 1834A
THIS DRAWING INCLUDES:
FOR: SNOHOMISH COUNTY OFFICIAL

DRAWN DJ DATE 07/31/2006 | CHK DSC DATE 09/10/2006 | DWG NUMBER 2707 - 311A | 0

☒ CONFORMS TO DESIGN CONCEPT
☐ CONFORMS TO DESIGN CONCEPT WITH REVISIONS AS SHOWN
☐ NON-CONFORMING–REVISE & RESUBMIT

THIS SHOP DRAWING HAS BEEN REVIEWED FOR GENERAL CONFORMANCE WITH DESIGN CONCEPT ONLY AND DOES NOT RELIEVE THE FABRICATOR/VENDOR OF RESPONSIBLITY FOR CONFORMANCE WITH DESIGN DRAWINGS AND SPECIFICATIONS / ALL OF WHICH HAVE PRIORITY OVER THIS SHOP DRAWING.

By A.F. Date 10-13-06

LIN & ASSOCIATES, INC.

PRO DRAFT INC. PDI# 676 : PH:(604)589-6425
DRAWINGS PREPARED ON 3D-Xsteel File Name :- A [312.A]
Model Name: 725_102_TOLT_BRIDGE_541
Plot Date: 09/10/2006 12:21:17

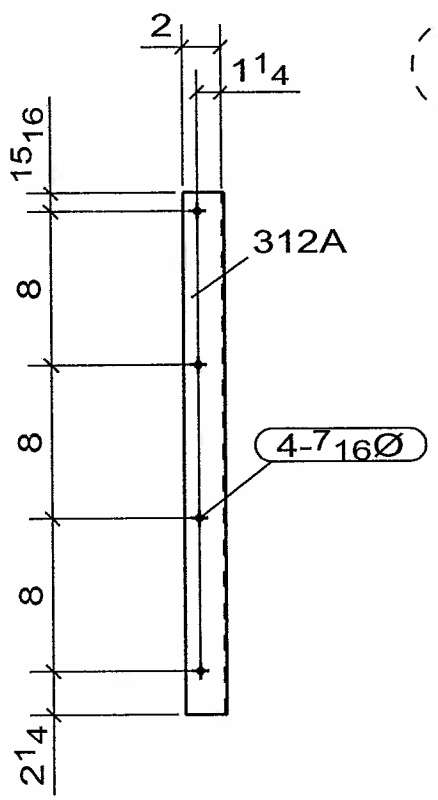

A - A

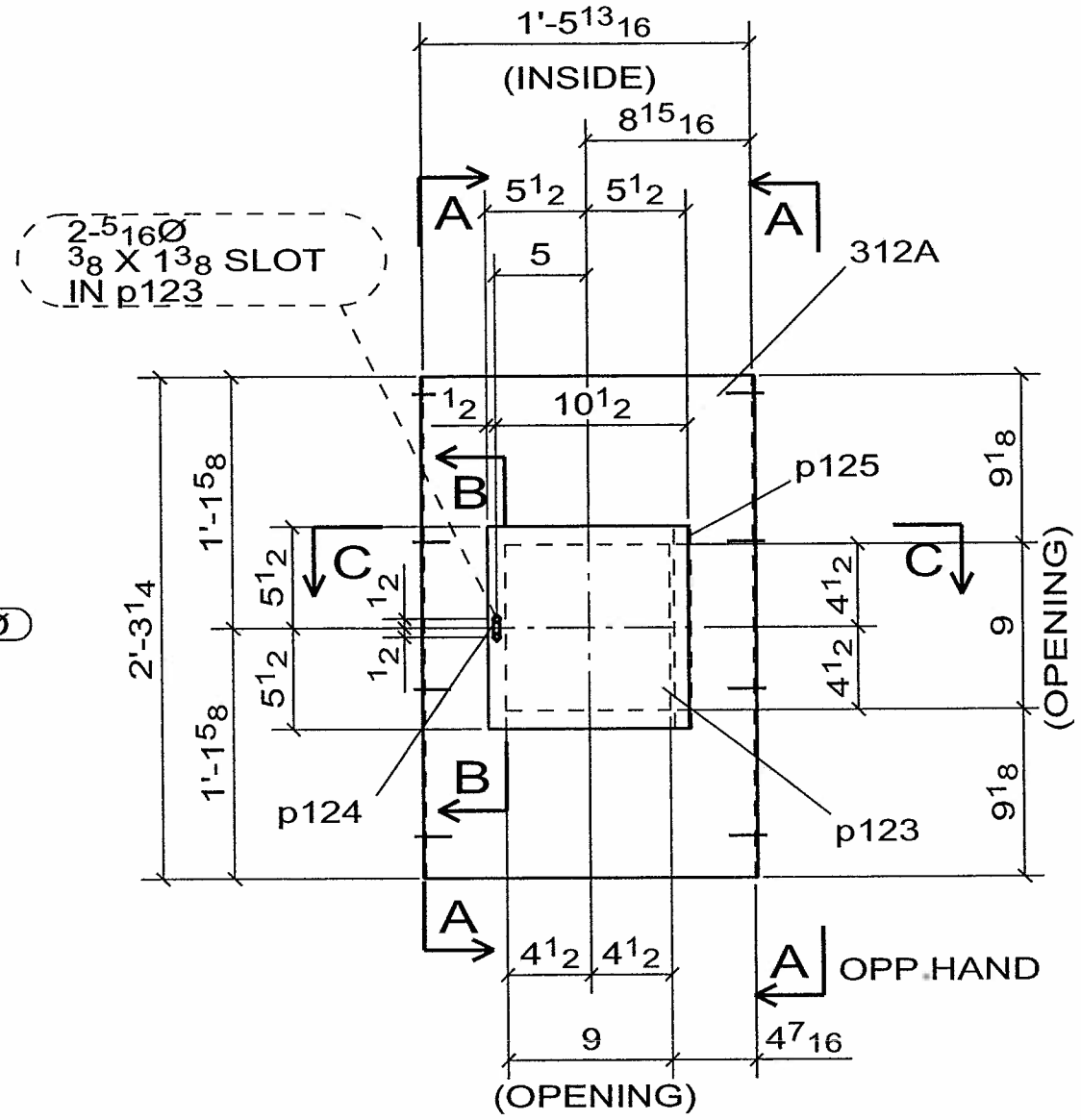

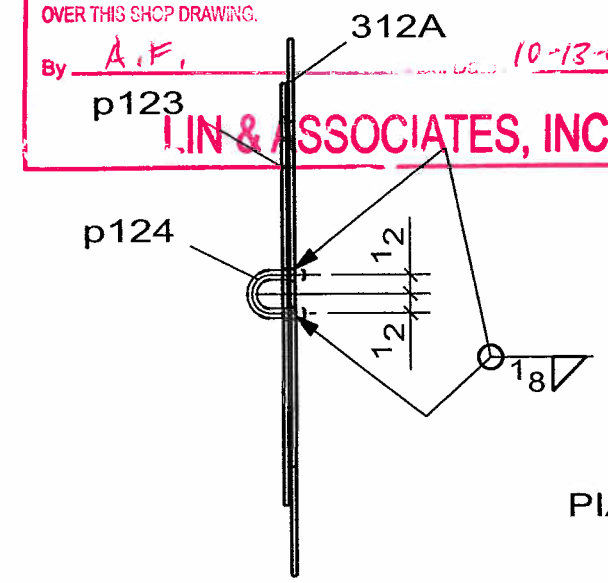

B - B

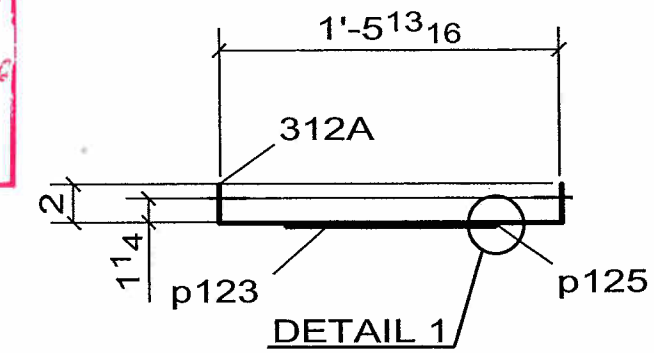

DETAIL 1

C - C

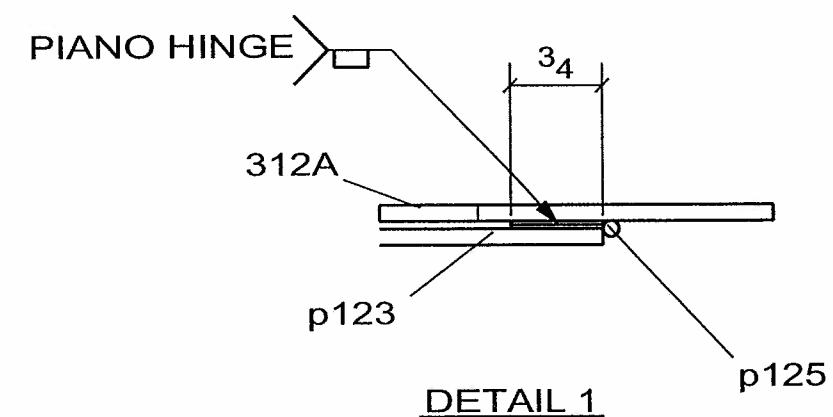

DETAIL 1

NOTE

DEBURR EDGES

WELD NOTE FOR ANY ASSEMBLY REQUIRING TACK WELDS:
- ALL TACK WELDS ARE TO BE MADE IN THE WELD JOINT ONLY

2 - SS_COVER -312A

No to SHIP	SHIP MARK	No PIECES	PIECE MARKS	DESCRIPTION	LENGTH	GRADE	REMARKS	WEIGHT	ADVANCE BILL
2	312A			SS_COVER		BRUSHED FINISH		23	
		2	312A	PL[redacted]21 13/16 X 11 GA	2'-3 1/4"	A304	BEND	19	
		2	p123	FB[redacted]11 X 11 GA	0'-11"	A304		4	
		2	p124	ROD1/4	0'-3 3/8"	A304	BEND	0	
		2	p125	[redacted] SS PIANO HINGE	0'-11"	A304	W / HOLES	0	
		[redacted]						0	

CONTRACTOR NOTE:
THIS DRAWING IS BEING SUBMITTED FOR APPROVAL AS REQUIRED. VERIFY OR SUPPLY ALL QUANTITIES, ALL DIMENSIONS, ALL INFORMATION, & ALL CONFIGURATIONS.

PRINT RECORD

NO.	USE	DATE
	APPR.	
	APPR.	
	PURCH	
	FAB	
	FAB. OFFICE	
	Q.A.	
	DIST.	
	ERECT.	

OPEN HOLES: 15/16 Ø U/N
WELD: BRIDGE WELDING CODE: D1.5
STEEL: AS NOTED
BOLTS:
SURFACE PREP-SP:
PAINT: SEE SPECS
REF.DRAWING: E6, E9

REV	DATE	DESCRIPTION	
0	SEP/10/06	FOR APPROVAL	VS

RAINIER WELDING

19020 NE 84TH STREET - REDMOND, WA 98053
(425) 868-1300 FAX (425) 868-8872
STEEL AND ALUMINUM FABRICATING

PROJECT: TOLT BRIDGE No 1834A
THIS DRAWING INCLUDES:
FOR: SNOHOMISH COUNTY OFFICIAL

DRAWN DJ DATE 07/31/2006 | CHK DSC DATE 09/10/2006 | DWG NUMBER 2707 - 312A | 0

☒ CONFORMS TO DESIGN CONCEPT
☐ CONFORMS TO DESIGN CONCEPT WITH REVISIONS AS SHOWN
☐ NON-CONFORMING–REVISE & RESUBMIT

THIS SHOP DRAWING HAS BEEN REVIEWED FOR GENERAL CONFORMANCE WITH DESIGN CONCEPT ONLY AND DOES NOT RELIEVE THE FABRICATOR/VENDOR OF RESPONSIBLITY FOR CONFORMANCE WITH DESIGN DRAWINGS AND SPECIFICATIONS ALL OF WHICH HAVE PRIORITY OVER THIS SHOP DRAWING.

By K.F. Date 10-13-06

LIN & ASSOCIATES, INC.

PRO DRAFT INC. PDI# 676 : PH:(604)589-6425
DRAWINGS PREPARED ON 3D-Xsteel File Name :- A [313.A]
Model Name: 725_102_TOLT_BRIDGE_541
Plot Date: 09/10/2006 12:21:18

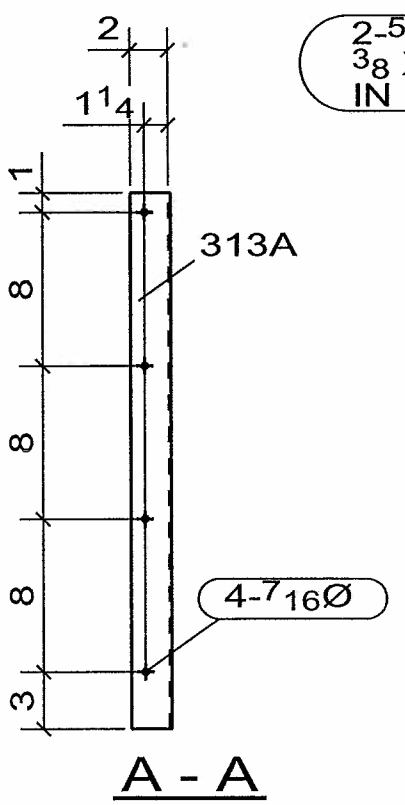

A - A

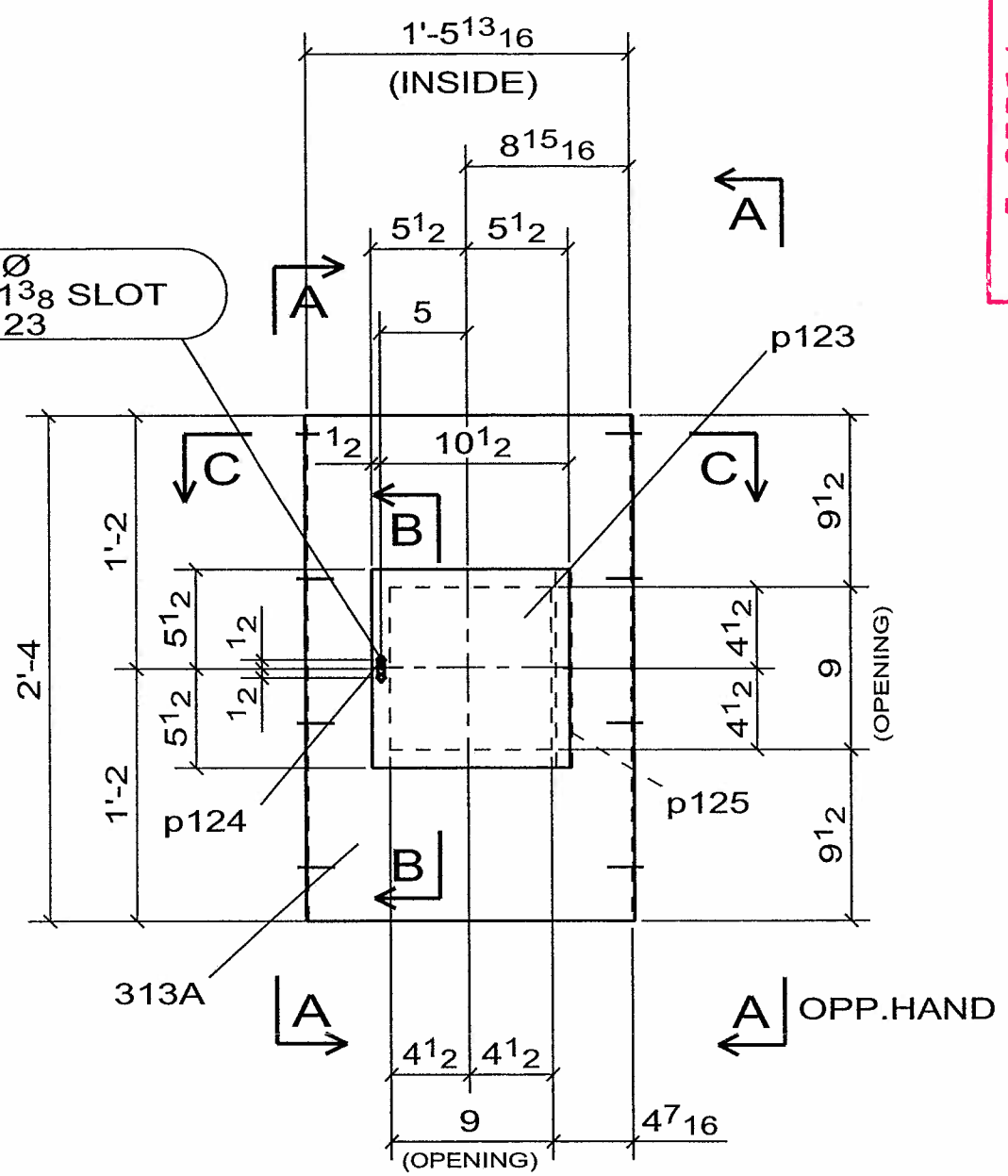

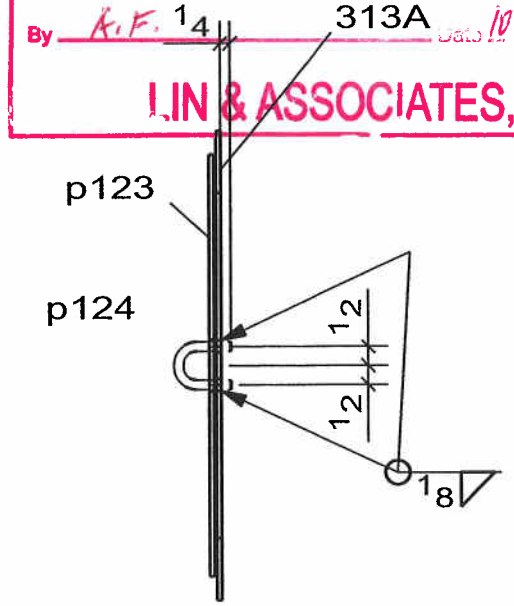

B - B

NOTE
DEBURR EDGES

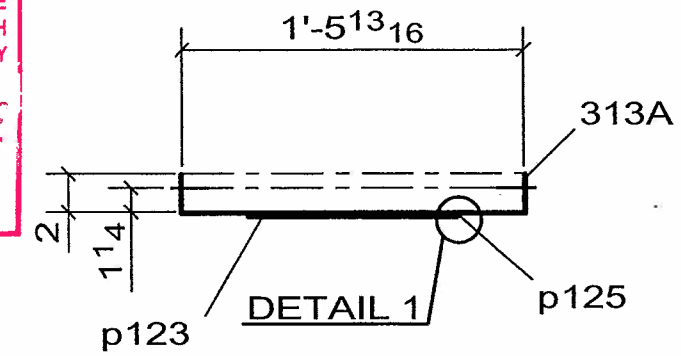

C - C

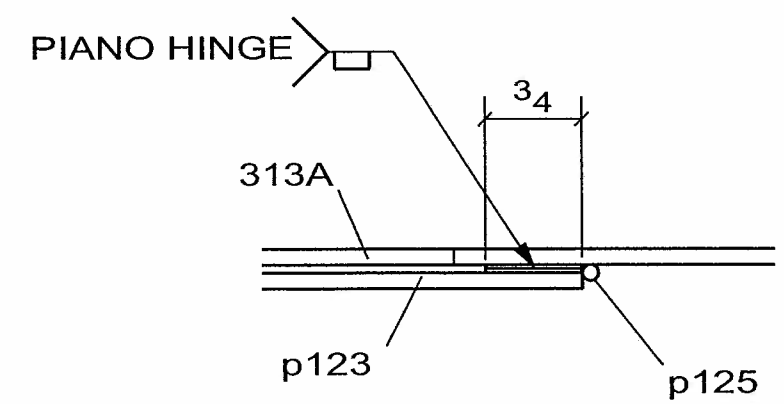

DETAIL 1

WELD NOTE FOR ANY ASSEMBLY REQUIRING TACK WELDS:
- ALL TACK WELDS ARE TO BE MADE IN THE WELD JOINT ONLY

2 - SS_COVER -313A

No to SHIP	SHIP MARK	No PIECES	PIECE MARKS	DESCRIPTION	LENGTH	GRADE	REMARKS	WEIGHT	ADVANCE BILL
2	313A			SS_COVER			BRUSHED FINISH	24	
		2	313A	PL[redacted]21 13/16 X 11 GA	2'-4"	A304	BEND	19	
		2	p123	FB[redacted]11 X 11 GA	0'-11"	A304		4	
		2	p124	ROD1/4	0'-3 3/8"	A304	BEND	0	
		2	p125	[redacted] SS PIANO HINGE	0'-11"	A304	W / HOLES	0	
		[redacted]						0	

CONTRACTOR NOTE:
THIS DRAWING IS BEING SUBMITTED FOR APPROVAL AS REQUIRED. VERIFY OR SUPPLY ALL QUANTITIES, ALL DIMENSIONS, ALL INFORMATION, & ALL CONFIGURATIONS.

PRINT RECORD

NO.	USE	DATE
	APPR.	
	APPR.	
	PURCH	
	FAB	
	FAB. OFFICE	
	Q.A.	
	DIST.	
	ERECT.	

OPEN HOLES: 15/16 Ø U/N
WELD: BRIDGE WELDING CODE: D1.5
STEEL: AS NOTED
BOLTS:
SURFACE PREP-SP:
PAINT: SEE SPECS
REF.DRAWING: E7, E8

REV	DATE	DESCRIPTION	
0	SEP/10/06	FOR APPROVAL	VS

RAINIER WELDING

19020 NE 84TH STREET - REDMOND, WA 98053
(425) 868-1300 FAX (425) 868-8872
STEEL AND ALUMINUM FABRICATING

PROJECT: TOLT BRIDGE No 1834A
THIS DRAWING INCLUDES:
FOR: SNOHOMISH COUNTY OFFICIAL

DRAWN DJ DATE 07/31/2006 | CHK DSC DATE 09/10/2006 | DWG NUMBER 2707 - 313A | 0

☒ CONFORMS TO DESIGN CONCEPT
☐ CONFORMS TO DESIGN CONCEPT WITH REVISIONS AS SHOWN
☐ NON-CONFORMING–REVISE & RESUBMIT

THIS SHOP DRAWING HAS BEEN REVIEWED FOR GENERAL CONFORMANCE WITH DESIGN CONCEPT ONLY AND DOES NOT RELIEVE THE FABRICATOR/VENDOR OF RESPONSIBLITY FOR CONFORMANCE WITH DESIGN DRAWINGS AND SPECIFICATIONS ALL OF WHICH HAVE PRIORITY OVER THIS SHOP DRAWING.

By A.F. Date 10-13-06

LIN & ASSOCIATES, INC.

PRO DRAFT INC. PDI# 676 : PH:(604)589-6425
DRAWINGS PREPARED ON 3D-Xsteel File Name :- A [314.A]
Model Name: 725_102_TOLT_BRIDGE_541
Plot Date: 09/10/2006 12:21:19

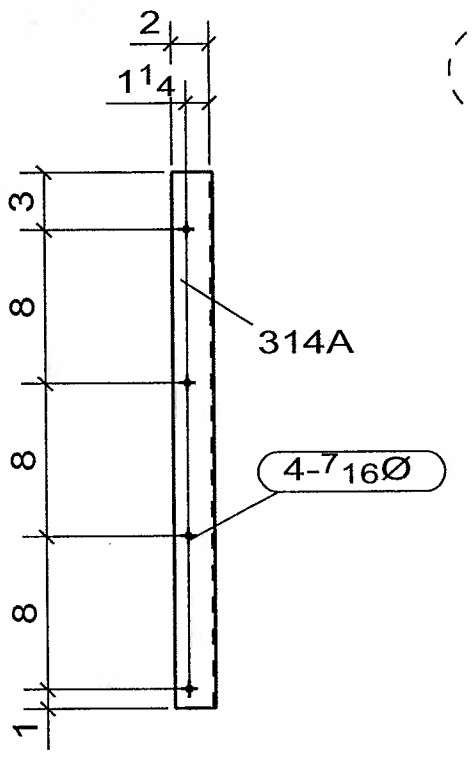

A - A

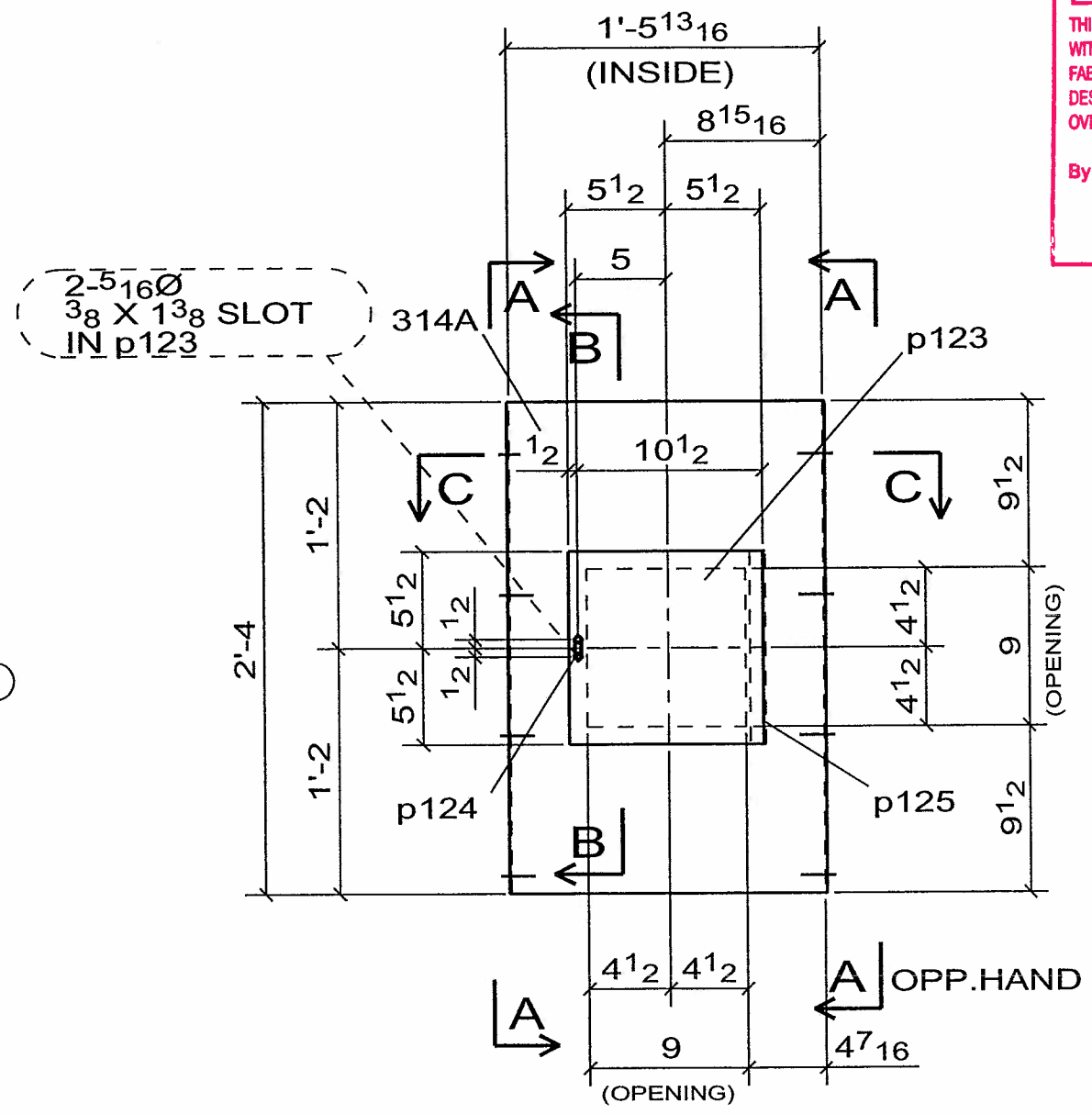

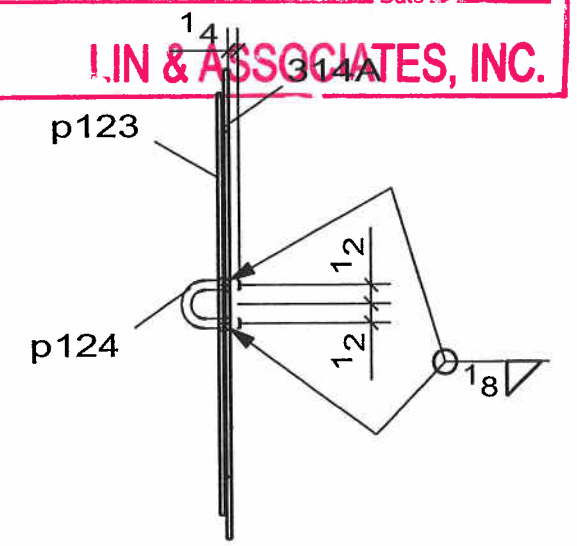

B - B

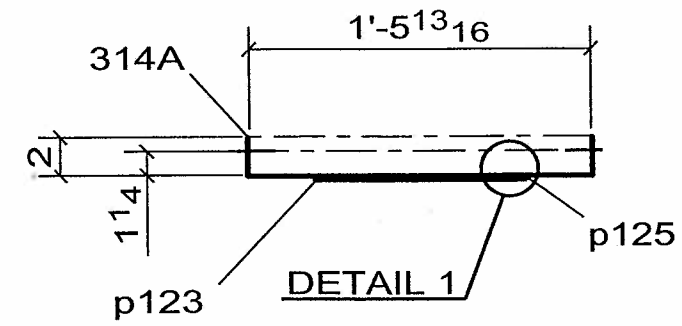

C-C

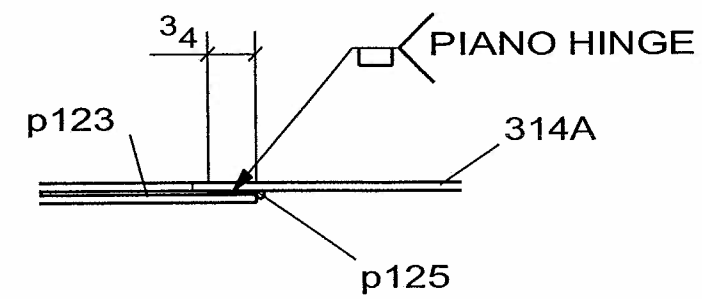

DETAIL 1

NOTE
DEBURR EDGES

WELD NOTE FOR ANY ASSEMBLY REQUIRING TACK WELDS:
- ALL TACK WELDS ARE TO BE MADE IN THE WELD JOINT ONLY

2 - SS_COVER -314A

No to SHIP	SHIP MARK	No PIECES	PIECE MARKS	DESCRIPTION	LENGTH	GRADE	REMARKS	WEIGHT	ADVANCE BILL
2	314A			SS_COVER			BRUSHED FINISH	24	
		2	314A	PL[redacted]21 13/16 X 11 GA	2'-4"	A304	BEND	19	
		2	p123	FB[redacted]11 X 11 GA	0'-11"	A304		4	
		2	p124	ROD1/4	0'-3 3/8"	A304	BEND	0	
		2	p125	[redacted] SS PIANO HINGE	0'-11"	A304	W / HOLES	0	
		[redacted]						0	

CONTRACTOR NOTE:
THIS DRAWING IS BEING SUBMITTED FOR APPROVAL AS REQUIRED. VERIFY OR SUPPLY ALL QUANTITIES, ALL DIMENSIONS, ALL INFORMATION, & ALL CONFIGURATIONS.

PRINT RECORD			
NO.	USE	DATE	OPEN HOLES 15/16 Ø U/N
	APPR.		WELD BRIDGE WELDING CODE: D1.5
	APPR.		STEEL AS NOTED
	PURCH		BOLTS
	FAB		SURFACE PREP-SP
	FAB. OFFICE		PAINT SEE SPECS
	Q.A.		REF.DRAWING E6, E9
	DIST.		
	ERECT.		

REV	DATE	DESCRIPTION	
0	SEP/10/06	FOR APPROVAL	VS

RAINIER WELDING

19020 NE 84TH STREET - REDMOND, WA 98053
(425) 868-1300 FAX (425) 868-8872
STEEL AND ALUMINUM FABRICATING

PROJECT: TOLT BRIDGE No 1834A
THIS DRAWING INCLUDES:
FOR: SNOHOMISH COUNTY OFFICIAL

DRAWN DJ DATE 07/31/2006 | CHK DSC DATE 09/10/2006 | DWG NUMBER 2707 - 314A | 0

☒ CONFORMS TO DESIGN CONCEPT
☐ CONFORMS TO DESIGN CONCEPT WITH REVISIONS AS SHOWN
☐ NON-CONFORMING–REVISE & RESUBMIT

THIS SHOP DRAWING HAS BEEN REVIEWED FOR GENERAL CONFORMANCE WITH DESIGN CONCEPT ONLY AND DOES NOT RELIEVE THE FABRICATOR/VENDOR OF RESPONSIBLITY FOR CONFORMANCE WITH DESIGN DRAWINGS AND SPECIFICATIONS ALL OF WHICH HAVE PRIORITY OVER THIS SHOP DRAWING.

By A.F. Date 10-13-06

LIN & ASSOCIATES, INC.

PRO DRAFT INC. PDI# 676 : PH:(604)589-6425
DRAWINGS PREPARED ON 3D-Xsteel File Name :- A [315.A]
Model Name: 725_102_TOLT_BRIDGE_541
Plot Date: 09/10/2006 12:21:21

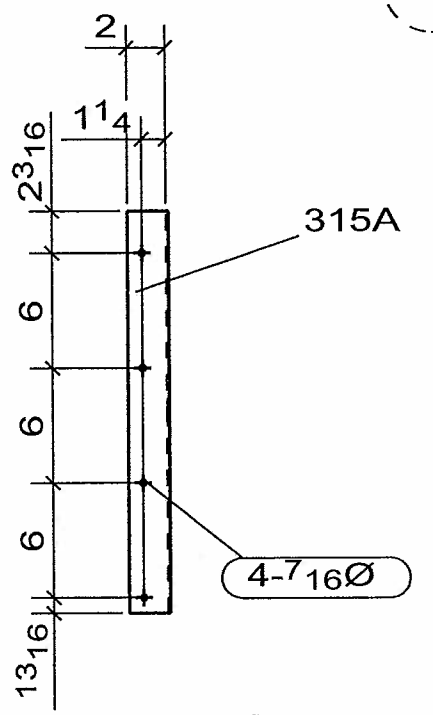

A - A

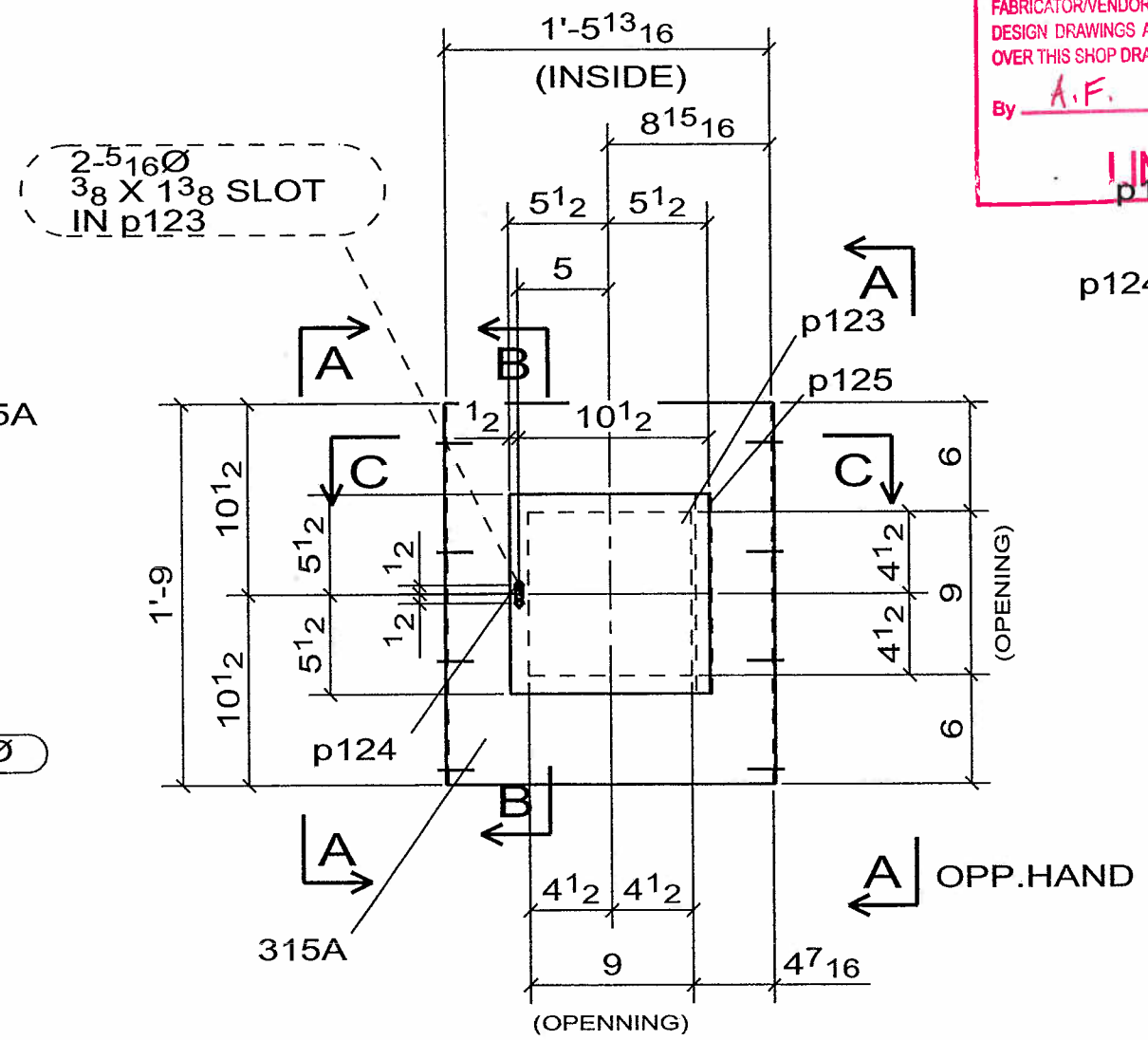

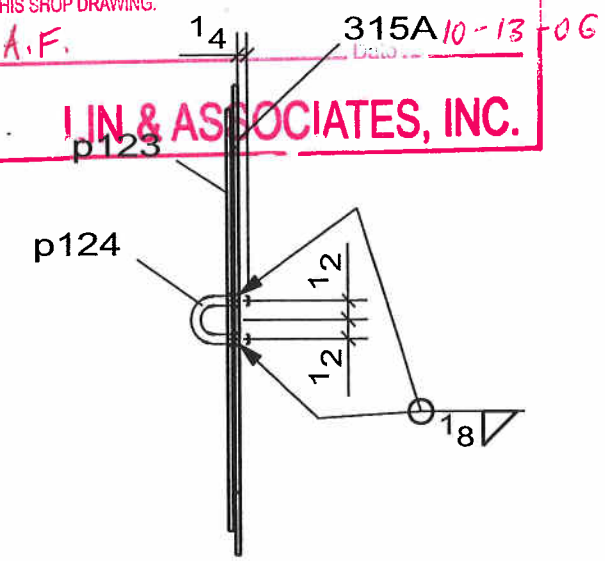

B - B

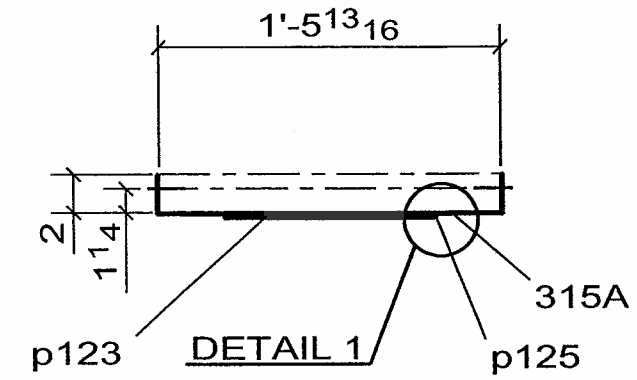

C-C

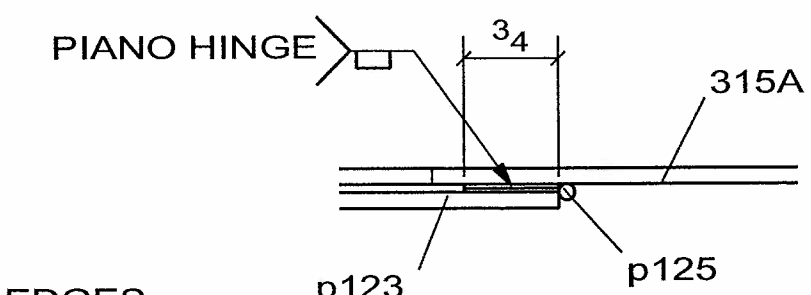

DETAIL 1

NOTE

DEBURR EDGES

WELD NOTE FOR ANY ASSEMBLY REQUIRING TACK WELDS:
- ALL TACK WELDS ARE TO BE MADE IN THE WELD JOINT ONLY

2 - SS_COVER -315A

No to SHIP	SHIP MARK	No PIECES	PIECE MARKS	DESCRIPTION	LENGTH	GRADE	REMARKS	WEIGHT	ADVANCE BILL
2	315A			SS_COVER			BRUSHED FINISH	18	
		2	315A	PL[redacted]21 X 11 GA	1'-9 13/16"	A304	BEND	14	
		2	p123	FB[redacted]11 X 11 GA	0'-11"	A304		4	
		2	p124	ROD1/4	0'-3 3/8"	A304	BEND	0	
		2	p125	[redacted] SS PIANO HINGE	0'-11"	A304	W / HOLES	0	
		[redacted]						0	

CONTRACTOR NOTE:
THIS DRAWING IS BEING SUBMITTED FOR APPROVAL AS REQUIRED. VERIFY OR SUPPLY ALL QUANTITIES, ALL DIMENSIONS, ALL INFORMATION, & ALL CONFIGURATIONS.

PRINT RECORD

NO.	USE	DATE
	APPR.	
	APPR.	
	PURCH	
	FAB	
	FAB. OFFICE	
	Q.A.	
	DIST.	
	ERECT.	

OPEN HOLES: 15/16 Ø U/N
WELD: BRIDGE WELDING CODE: D1.5
STEEL: AS NOTED
BOLTS:
SURFACE PREP-SP:
PAINT: SEE SPECS
REF.DRAWING: E7, E8

REV	DATE	DESCRIPTION	
0	SEP/10/06	FOR APPROVAL	VS

RAINIER WELDING

19020 NE 84TH STREET - REDMOND, WA 98053
(425) 868-1300 FAX (425) 868-8872
STEEL AND ALUMINUM FABRICATING

PROJECT: TOLT BRIDGE No 1834A
THIS DRAWING INCLUDES:
FOR: SNOHOMISH COUNTY OFFICIAL

DRAWN DJ DATE 07/31/2006 | CHK DSC DATE 09/10/2006 | DWG NUMBER 2707 - 315A | 0

PRO DRAFT INC. PDI# 676 : PH:(604)589-6425
DRAWINGS PREPARED ON 3D-Xsteel File Name :- A [316.A]
Model Name: 725_102_TOLT_BRIDGE_541
Plot Date: 09/10/2006 12:21:22

☒ CONFORMS TO DESIGN CONCEPT
☐ CONFORMS TO DESIGN CONCEPT WITH REVISIONS AS SHOWN
☐ NON-CONFORMING–REVISE & RESUBMIT
THIS SHOP DRAWING HAS BEEN REVIEWED FOR GENERAL CONFORMANCE WITH DESIGN CONCEPT ONLY AND DOES NOT RELIEVE THE FABRICATOR/VENDOR OF RESPONSIBLITY FOR CONFORMANCE WITH DESIGN DRAWINGS AND SPECIFICATIONS ALL OF WHICH HAVE PRIORITY OVER THIS SHOP DRAWING.
By A.F. Date 10-13-06
LIN & ASSOCIATES, INC.

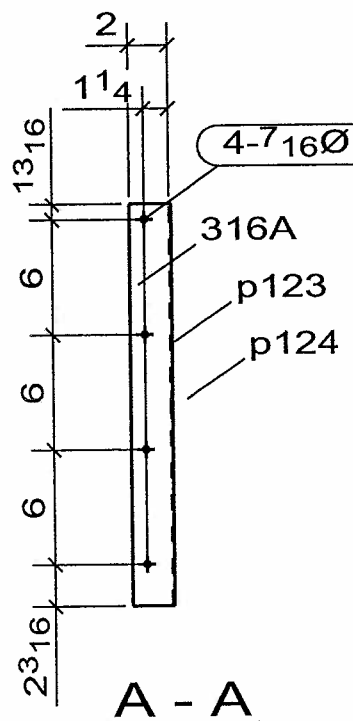

A - A

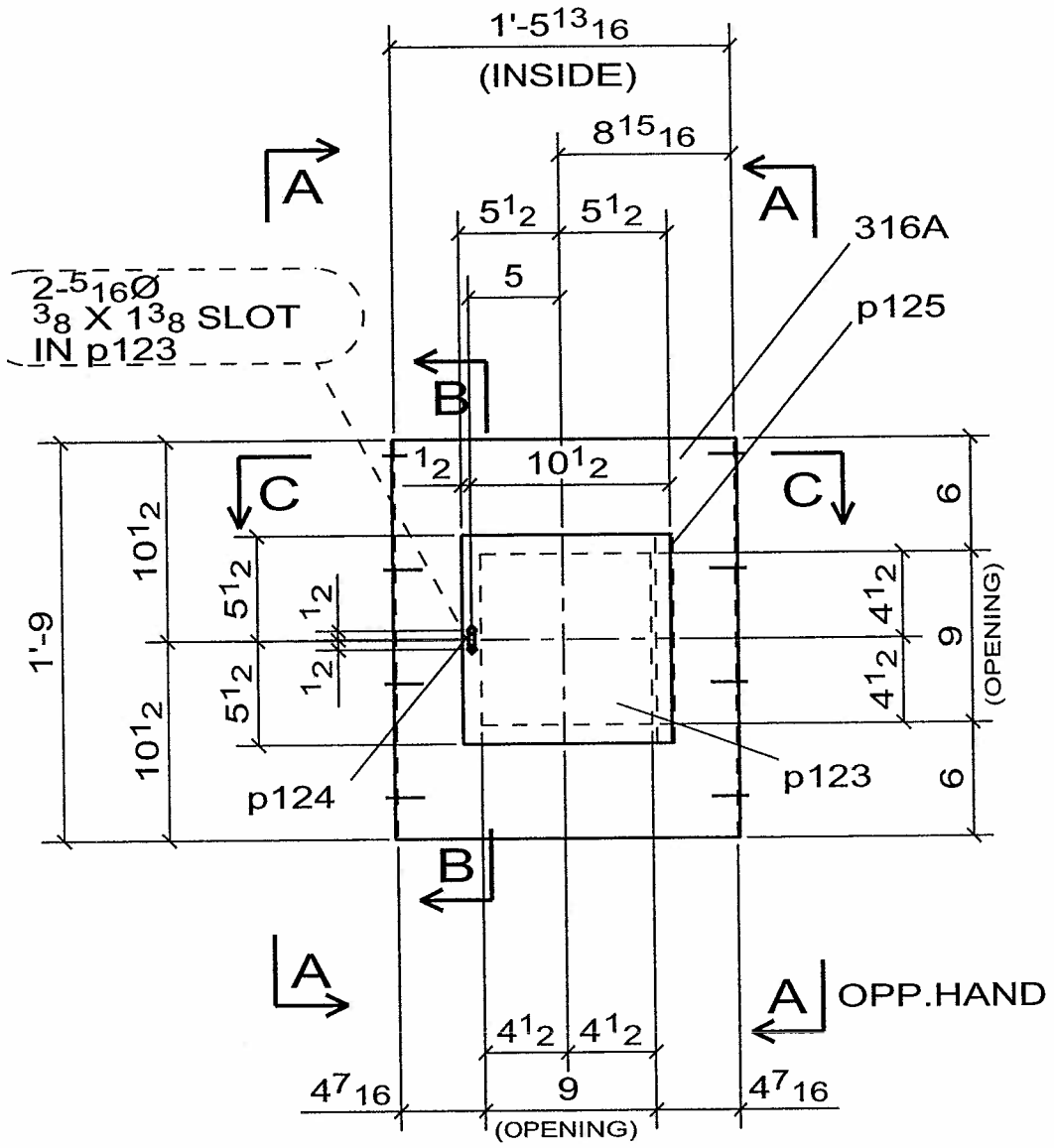

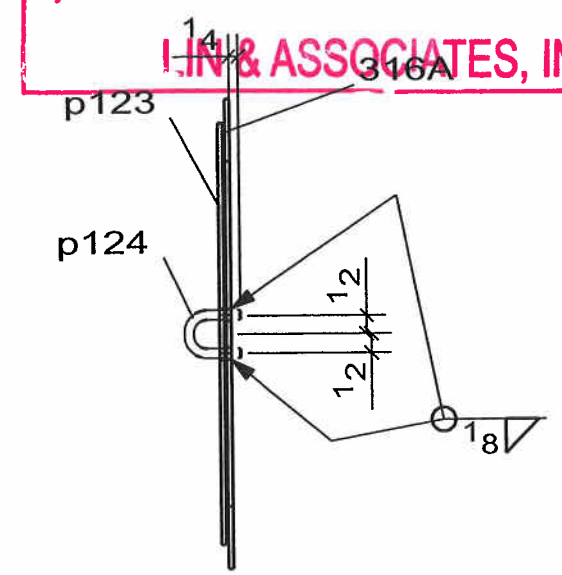

B - B

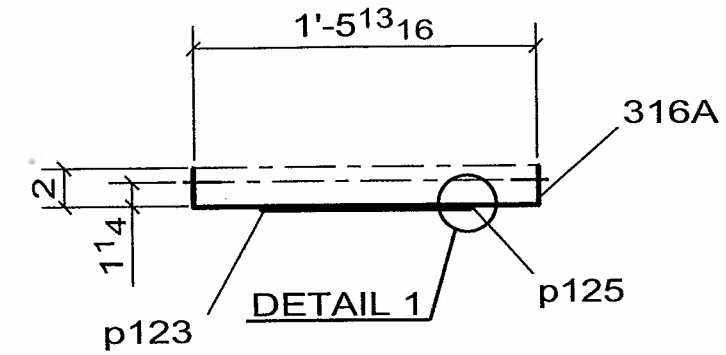

C-C

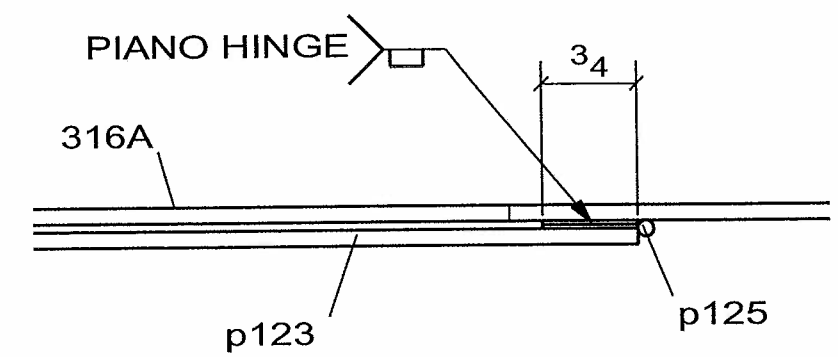

NOTE
DEBURR EDGES

WELD NOTE FOR ANY ASSEMBLY REQUIRING TACK WELDS:
- ALL TACK WELDS ARE TO BE MADE IN THE WELD JOINT ONLY

2 - SS_COVER -316A

No to SHIP	SHIP MARK	No PIECES	PIECE MARKS	DESCRIPTION	LENGTH	GRADE	REMARKS	WEIGHT	ADVANCE BILL
2	316A			SS_COVER		BRUSHED FINISH		18	
		2	316A	PL[redacted]21 X 11 GA	1'-9 13/16"	A304	BEND	14	
		2	p123	FB[redacted]11 X 11 GA	0'-11"	A304		4	
		2	p124	ROD1/4	0'-3 3/8"	A304	BEND	0	
		2	p125	[redacted] SS PIANO HINGE	0'-11"	A304	W / HOLES	0	
		[redacted]						0	

CONTRACTOR NOTE:
THIS DRAWING IS BEING SUBMITTED FOR APPROVAL AS REQUIRED. VERIFY OR SUPPLY ALL QUANTITIES, ALL DIMENSIONS, ALL INFORMATION, & ALL CONFIGURATIONS.

PRINT RECORD

NO.	USE	DATE
	APPR.	
	APPR.	
	PURCH	
	FAB	
	FAB. OFFICE	
	Q.A.	
	DIST.	
	ERECT.	

OPEN HOLES: 15/16 Ø U/N
WELD: BRIDGE WELDING CODE: D1.5
STEEL: AS NOTED
BOLTS:
SURFACE PREP-SP:
PAINT: SEE SPECS
REF.DRAWING: E6, E9

REV	DATE	DESCRIPTION	
0	SEP/10/06	FOR APPROVAL	VS

RAINIER WELDING

19020 NE 84TH STREET - REDMOND, WA 98053
(425) 868-1300 FAX (425) 868-8872
STEEL AND ALUMINUM FABRICATING

PROJECT: TOLT BRIDGE No 1834A
THIS DRAWING INCLUDES:
FOR: SNOHOMISH COUNTY OFFICIAL
DRAWN DJ DATE 07/31/2006
CHK DSC DATE 09/10/2006
DWG NUMBER 2707 - 316A 0

☒ CONFORMS TO DESIGN CONCEPT
☐ CONFORMS TO DESIGN CONCEPT WITH REVISIONS AS SHOWN
☐ NON-CONFORMING–REVISE & RESUBMIT

THIS SHOP DRAWING HAS BEEN REVIEWED FOR GENERAL CONFORMANCE WITH DESIGN CONCEPT ONLY AND DOES NOT RELIEVE THE FABRICATOR/VENDOR OF RESPONSIBLITY FOR CONFORMANCE WITH DESIGN DRAWINGS AND SPECIFICATIONS ALL OF WHICH HAVE PRIORITY OVER THIS SHOP DRAWING.

By A.F. Date 10-13-06

LIN & ASSOCIATES, INC.

PRO DRAFT INC. PDI# 676 : PH:(604)589-6425
DRAWINGS PREPARED ON 3D-Xsteel File Name :- A [317.A]
Model Name: 725_102_TOLT_BRIDGE_541
Plot Date: 09/10/2006 12:21:23

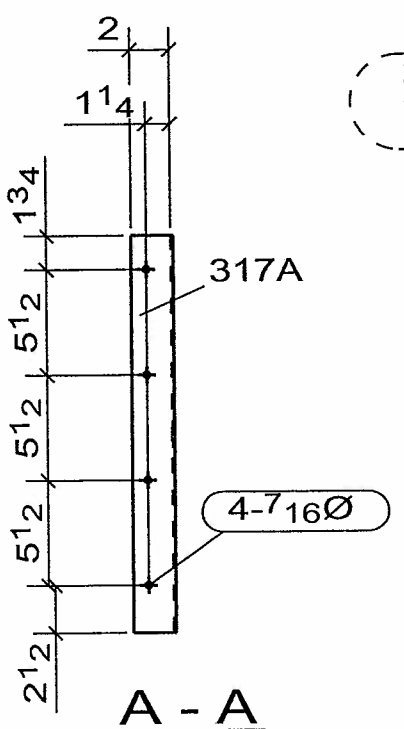

A - A

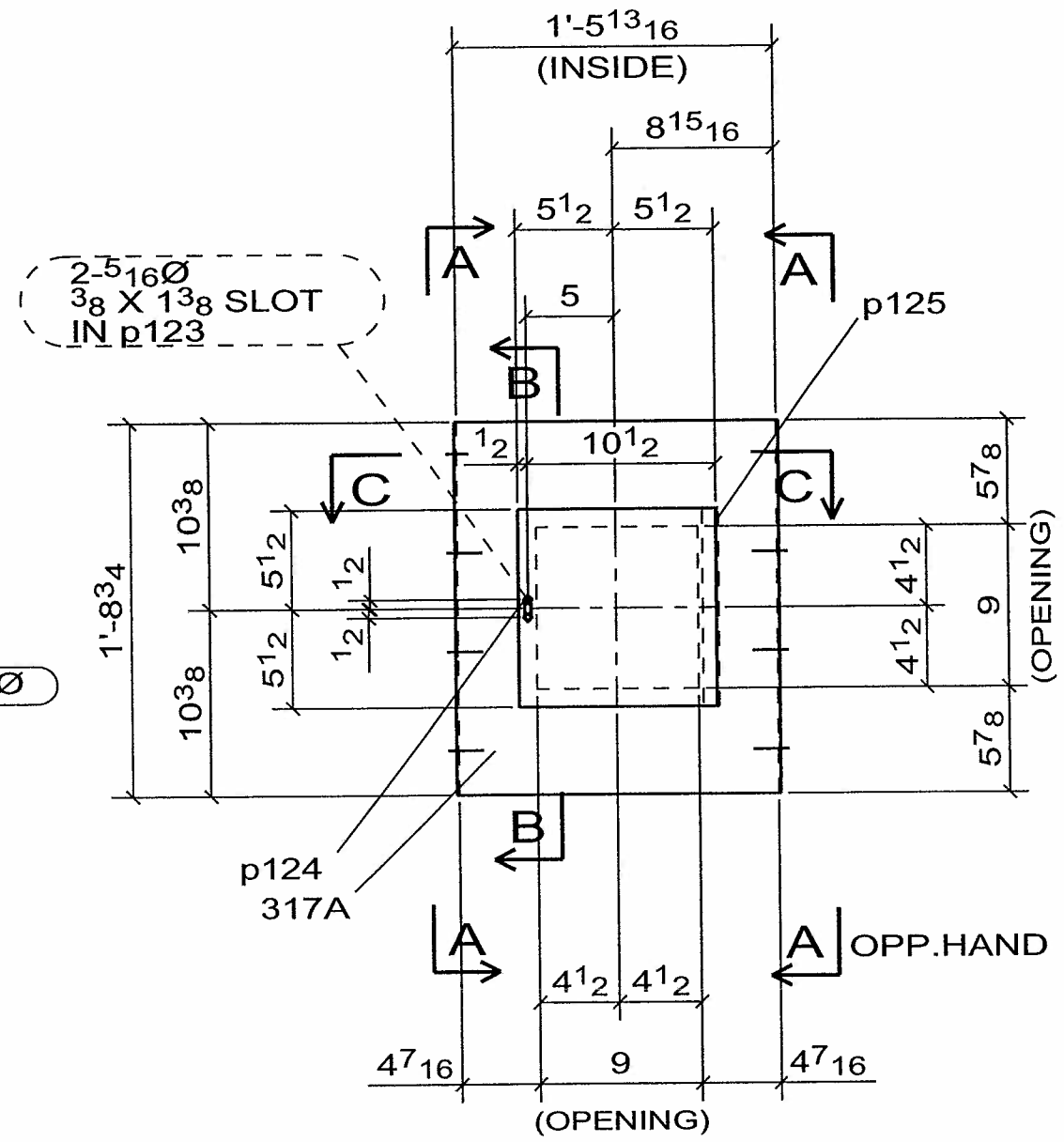

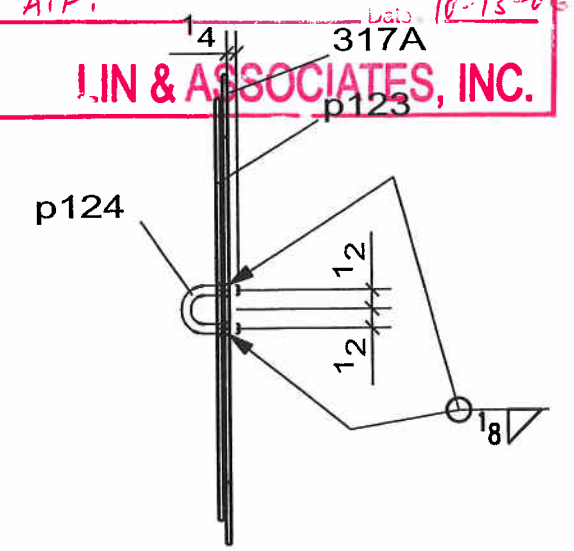

B - B

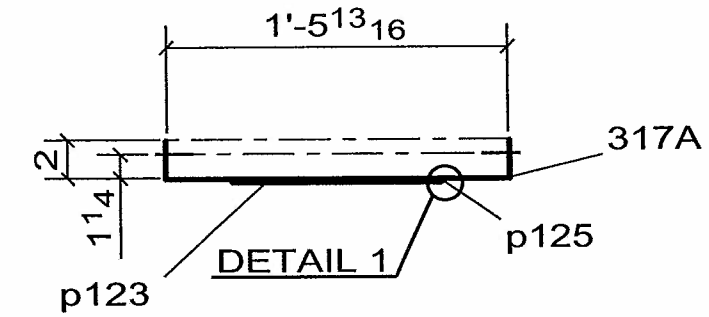

C - C

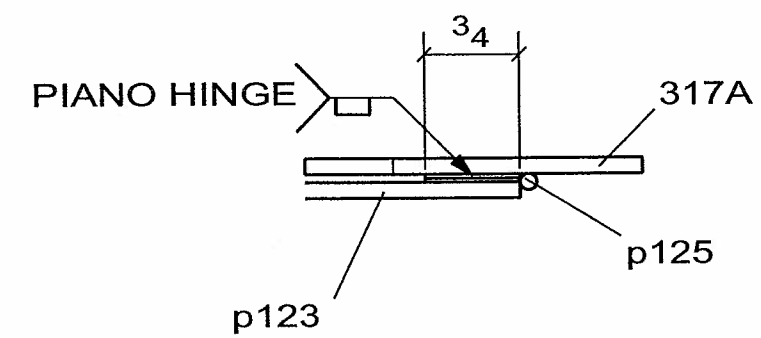

DETAIL 1

NOTE
DEBURR EDGES

WELD NOTE FOR ANY ASSEMBLY REQUIRING TACK WELDS:
- ALL TACK WELDS ARE TO BE MADE IN THE WELD JOINT ONLY

2 - SS_COVER -317A

No to SHIP	SHIP MARK	No PIECES	PIECE MARKS	DESCRIPTION	LENGTH	GRADE	REMARKS	WEIGHT	ADVANCE BILL
2	317A			SS_COVER			BRUSHED FINISH	18	
		2	317A	PL[redacted]20 3/4 X 11 GA	1'-9 13/16"	A304	BEND	14	
		2	p123	FB[redacted]1 X 11 GA	0'-11"	A304		4	
		2	p124	ROD1/4	0'-3 3/8"	A304	BEND	0	
		2	p125	[redacted] SS PIANO HINGE	0'-11"	A304	W / HOLES	0	
		[redacted]						0	

CONTRACTOR NOTE:
THIS DRAWING IS BEING SUBMITTED FOR APPROVAL AS REQUIRED. VERIFY OR SUPPLY ALL QUANTITIES, ALL DIMENSIONS, ALL INFORMATION, & ALL CONFIGURATIONS.

PRINT RECORD

NO.	USE	DATE
	APPR.	
	APPR.	
	PURCH	
	FAB	
	FAB. OFFICE	
	Q.A.	
	DIST.	
	ERECT.	

OPEN HOLES 15/16 Ø U/N
WELD BRIDGE WELDING CODE: D1.5
STEEL AS NOTED
BOLTS
SURFACE PREP-SP
PAINT SEE SPECS
REF.DRAWING E6, E9

REV	DATE	DESCRIPTION	
0	SEP/10/06	FOR APPROVAL	VS

RAINIER WELDING

19020 NE 84TH STREET - REDMOND, WA 98053
(425) 868-1300 FAX (425) 868-8872
STEEL AND ALUMINUM FABRICATING

PROJECT TOLT BRIDGE No 1834A
THIS DRAWING INCLUDES
FOR SNOHOMISH COUNTY OFFICIAL

DRAWN DJ DATE 07/31/2006 | CHK DSC DATE 09/10/2006 | DWG NUMBER 2707 - 317A | 0

☒ CONFORMS TO DESIGN CONCEPT
☐ CONFORMS TO DESIGN CONCEPT WITH REVISIONS AS SHOWN
☐ NON-CONFORMING–REVISE & RESUBMIT

THIS SHOP DRAWING HAS BEEN REVIEWED FOR GENERAL CONFORMANCE WITH DESIGN CONCEPT ONLY AND DOES NOT RELIEVE THE FABRICATOR/VENDOR OF RESPONSIBLITY FOR CONFORMANCE WITH DESIGN DRAWINGS AND SPECIFICATIONS ALL OF WHICH HAVE PRIORITY OVER THIS SHOP DRAWING.

By A.F. Date 10-13-06

LIN & ASSOCIATES, INC.

PRO DRAFT INC. PDI# 676 : PH:(604)589-6425
DRAWINGS PREPARED ON 3D-Xsteel File Name :- A [318.A]
Model Name: 725_102_TOLT_BRIDGE_541
Plot Date: 09/10/2006 12:21:25

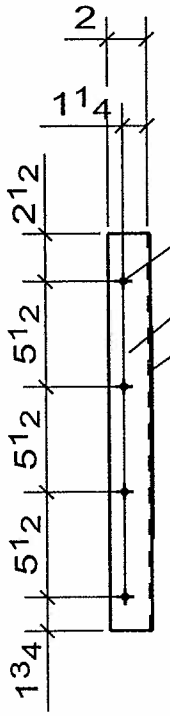

A - A

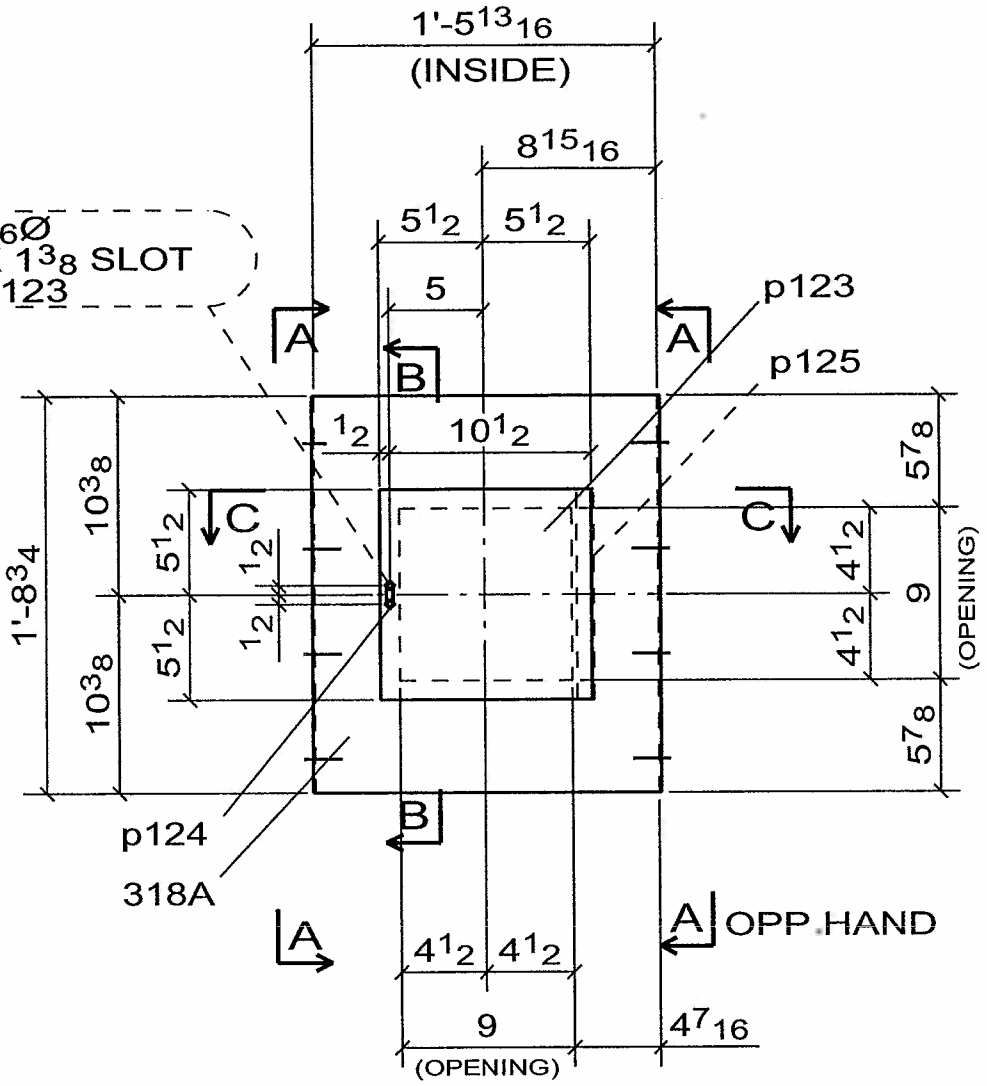

2 - SS_COVER -318A

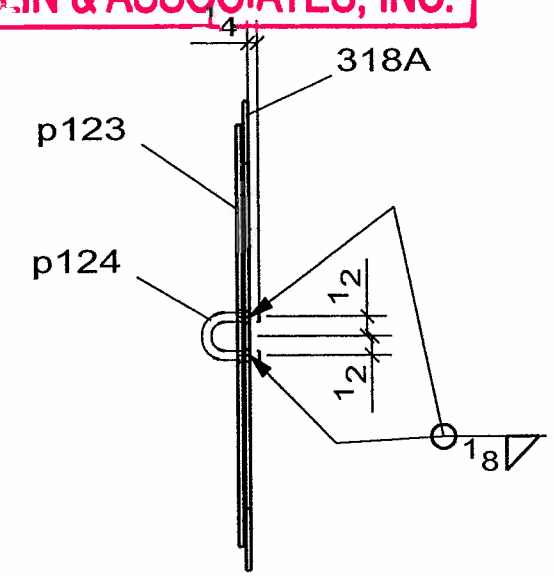

B - B

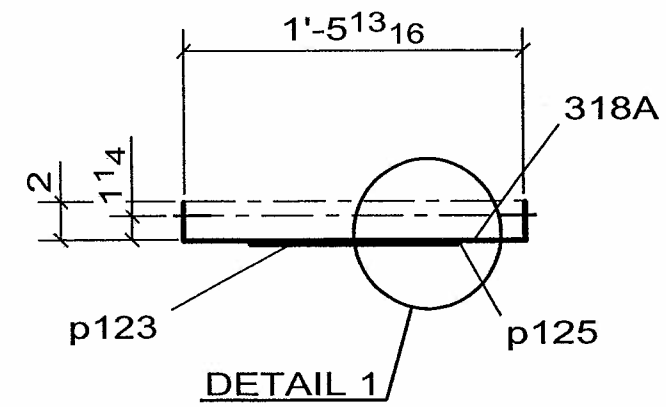

C - C

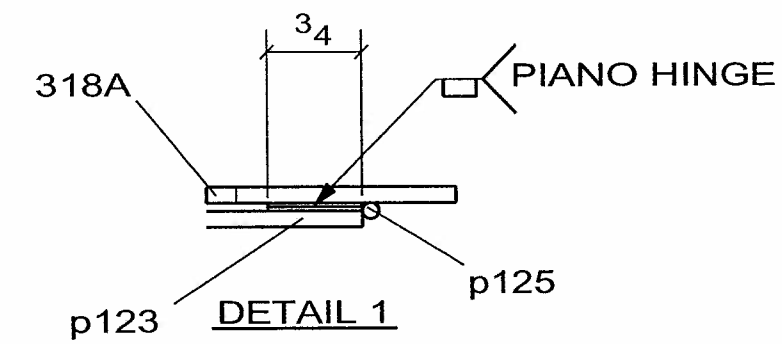

NOTE

DEBURR EDGES

WELD NOTE FOR ANY ASSEMBLY REQUIRING TACK WELDS:
- ALL TACK WELDS ARE TO BE MADE IN THE WELD JOINT ONLY

No to SHIP	SHIP MARK	No PIECES	PIECE MARKS	DESCRIPTION	LENGTH	GRADE	REMARKS	WEIGHT	ADVANCE BILL
2	318A			SS_COVER			BRUSHED FINISH	18	
		2	318A	PL[redacted]20 3/4 X 11 GA	1'-9 13/16"	A304	BEND	14	
		2	p123	FB[redacted]11 X 11 GA	0'-11"	A304		4	
		2	p124	ROD1/4	0'-3 3/8"	A304	BEND	0	
		2	p125	[redacted] SS PIANO HINGE	0'-11"	A304	W / HOLES	0	
		[redacted]						0	

CONTRACTOR NOTE:
THIS DRAWING IS BEING SUBMITTED FOR APPROVAL AS REQUIRED. VERIFY OR SUPPLY ALL QUANTITIES, ALL DIMENSIONS, ALL INFORMATION, & ALL CONFIGURATIONS.

PRINT RECORD

NO.	USE	DATE
	APPR.	
	APPR.	
	PURCH	
	FAB	
	FAB. OFFICE	
	Q.A.	
	DIST.	
	ERECT.	

OPEN HOLES: 15/16 Ø U/N
WELD: BRIDGE WELDING CODE: D1.5
STEEL: AS NOTED
BOLTS:
SURFACE PREP-SP:
PAINT: SEE SPECS
REF.DRAWING: E7, E8

REV	DATE	DESCRIPTION	
0	SEP/10/06	FOR APPROVAL	VS

RAINIER WELDING
19020 NE 84TH STREET - REDMOND, WA 98053
(425) 868-1300 FAX (425) 868-8872
STEEL AND ALUMINUM FABRICATING

PROJECT: TOLT BRIDGE No 1834A
THIS DRAWING INCLUDES:
FOR: SNOHOMISH COUNTY OFFICIAL

DRAWN DJ DATE 07/31/2006 | CHK DSC DATE 09/10/2006 | DWG NUMBER 2707 - 318A | 0

☒ CONFORMS TO DESIGN CONCEPT
☐ CONFORMS TO DESIGN CONCEPT WITH REVISIONS AS SHOWN
☐ NON-CONFORMING–REVISE & RESUBMIT

THIS SHOP DRAWING HAS BEEN REVIEWED FOR GENERAL CONFORMANCE WITH DESIGN CONCEPT ONLY AND DOES NOT RELIEVE THE FABRICATOR/VENDOR OF RESPONSIBLITY FOR CONFORMANCE WITH DESIGN DRAWINGS AND SPECIFICATIONS ALL OF WHICH HAVE PRIORITY OVER THIS SHOP DRAWING.

By A.F. 10-13-06

LIN & ASSOCIATES, INC.

PRO DRAFT INC. PDI# 676 : PH:(604)589-6425
DRAWINGS PREPARED ON 3D-Xsteel File Name :- A [319.A]
Model Name: 725_102_TOLT_BRIDGE_541
Plot Date: 09/10/2006 12:21:26

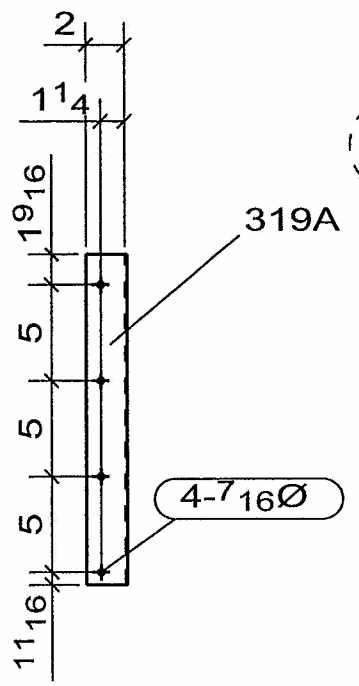

A - A

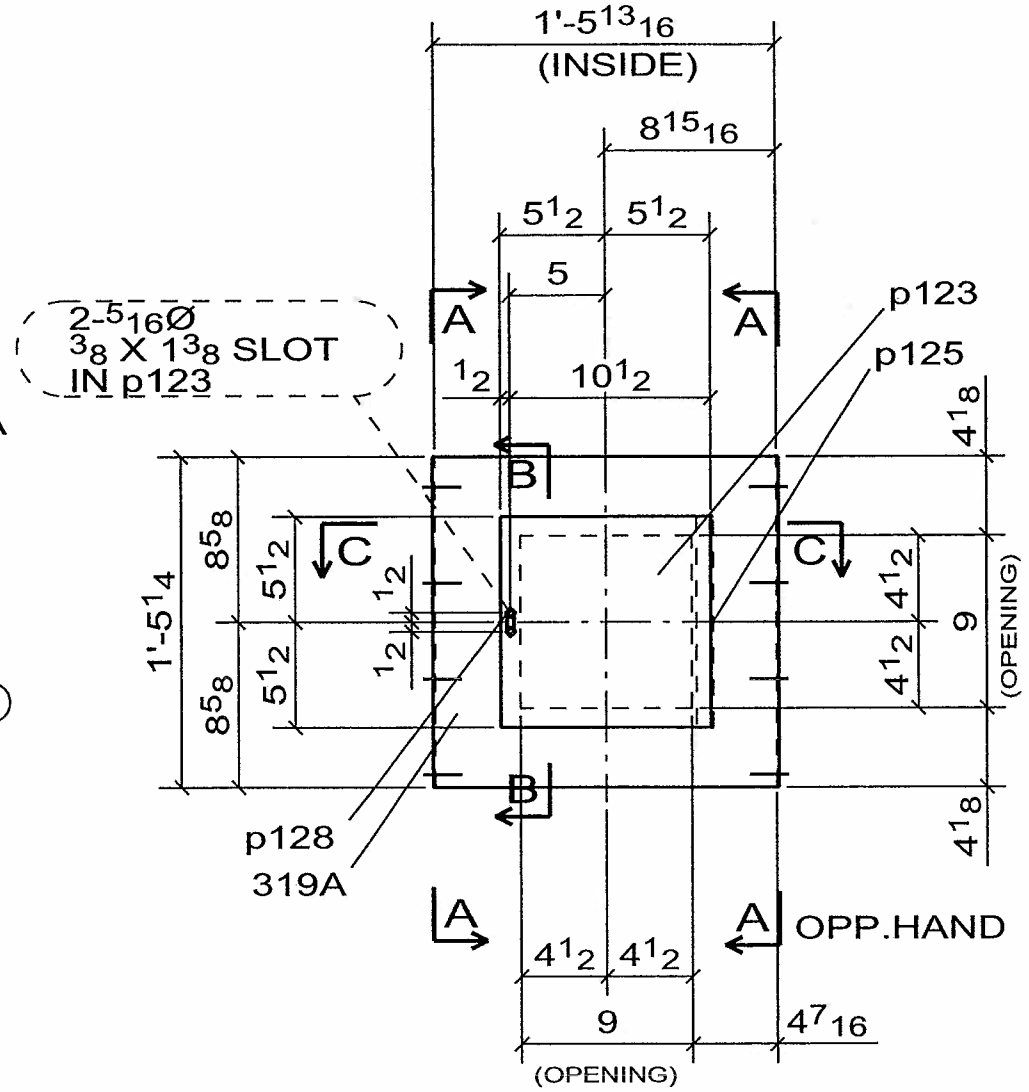

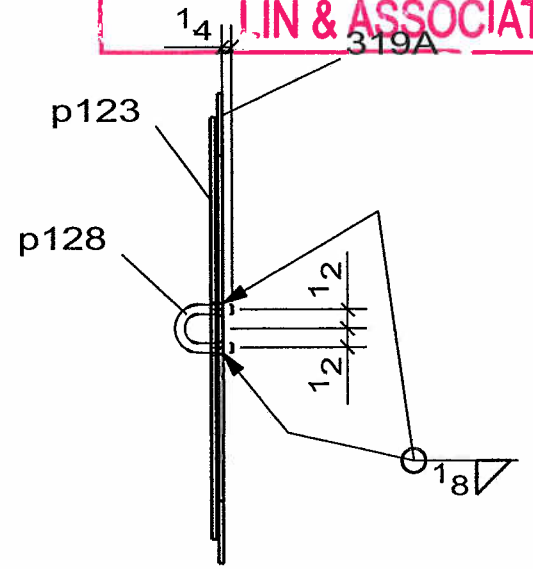

B - B

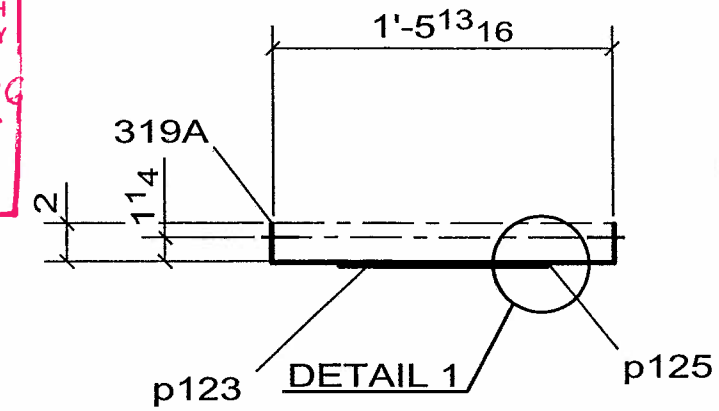

C - C

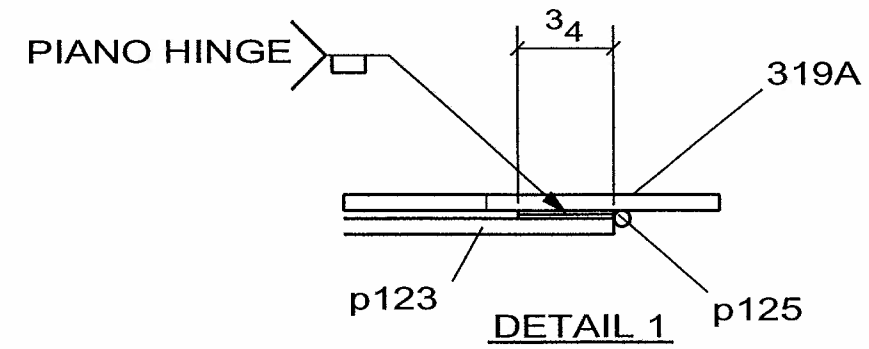

NOTE
DEBURR EDGES

WELD NOTE FOR ANY ASSEMBLY REQUIRING TACK WELDS:
- ALL TACK WELDS ARE TO BE MADE IN THE WELD JOINT ONLY

2 - SS_COVER -319A

No to SHIP	SHIP MARK	No PIECES	PIECE MARKS	DESCRIPTION	LENGTH	GRADE	REMARKS	WEIGHT	ADVANCE BILL
2	319A			SS_COVER			BRUSHED FINISH	15	
		2	319A	PL[redacted]7 1/4 X 11 GA	1'-9 13/16"	A304	BEND	11	
		2	p123	FB[redacted]1 X 11 GA	0'-11"	A304		4	
		2	p125	[redacted] SS PIANO HINGE	0'-11"	A304	W / HOLES	0	
		[redacted]						0	
		2	p128	ROD1/4	0'-3 3/8"	A304	BEND	0	

CONTRACTOR NOTE:
THIS DRAWING IS BEING SUBMITTED FOR APPROVAL AS REQUIRED. VERIFY OR SUPPLY ALL QUANTITIES, ALL DIMENSIONS, ALL INFORMATION, & ALL CONFIGURATIONS.

PRINT RECORD

NO.	USE	DATE
	APPR.	
	APPR.	
	PURCH	
	FAB	
	FAB. OFFICE	
	Q.A.	
	DIST.	
	ERECT.	

OPEN HOLES: 15/16 Ø U/N
WELD: BRIDGE WELDING CODE: D1.5
STEEL: AS NOTED
BOLTS:
SURFACE PREP-SP:
PAINT: SEE SPECS
REF.DRAWING: E6, E9

REV	DATE	DESCRIPTION	
0	SEP/10/06	FOR APPROVAL	VS

RAINIER WELDING

19020 NE 84TH STREET - REDMOND, WA 98053
(425) 868-1300 FAX (425) 868-8872
STEEL AND ALUMINUM FABRICATING

PROJECT: TOLT BRIDGE No 1834A
THIS DRAWING INCLUDES:
FOR: SNOHOMISH COUNTY OFFICIAL

DRAWN DJ DATE 07/31/2006 | CHK DSC DATE 09/10/2006 | DWG NUMBER 2707 - 319A | 0

☒ CONFORMS TO DESIGN CONCEPT
☐ CONFORMS TO DESIGN CONCEPT WITH REVISIONS AS SHOWN
☐ NON-CONFORMING–REVISE & RESUBMIT
THIS SHOP DRAWING HAS BEEN REVIEWED FOR GENER[illegible] CONFORMANCE WITH DESIGN CONCEPT ONLY AND [illegible] THE FABRICATOR VENDOR OF [illegible] WITH DESIGN DRAWINGS AND [illegible] RITY OVER THIS [illegible]
By K.F. 10-13-06
LIN & ASSOCIATES, INC.

PRO DRAFT INC. PDI# 676 : PH:(604)589-6425
DRAWINGS PREPARED ON 3D-Xsteel File Name :- A [320.A]
Model Name: 725_102_TOLT_BRIDGE_541
Plot Date: 09/10/2006 12:21:27

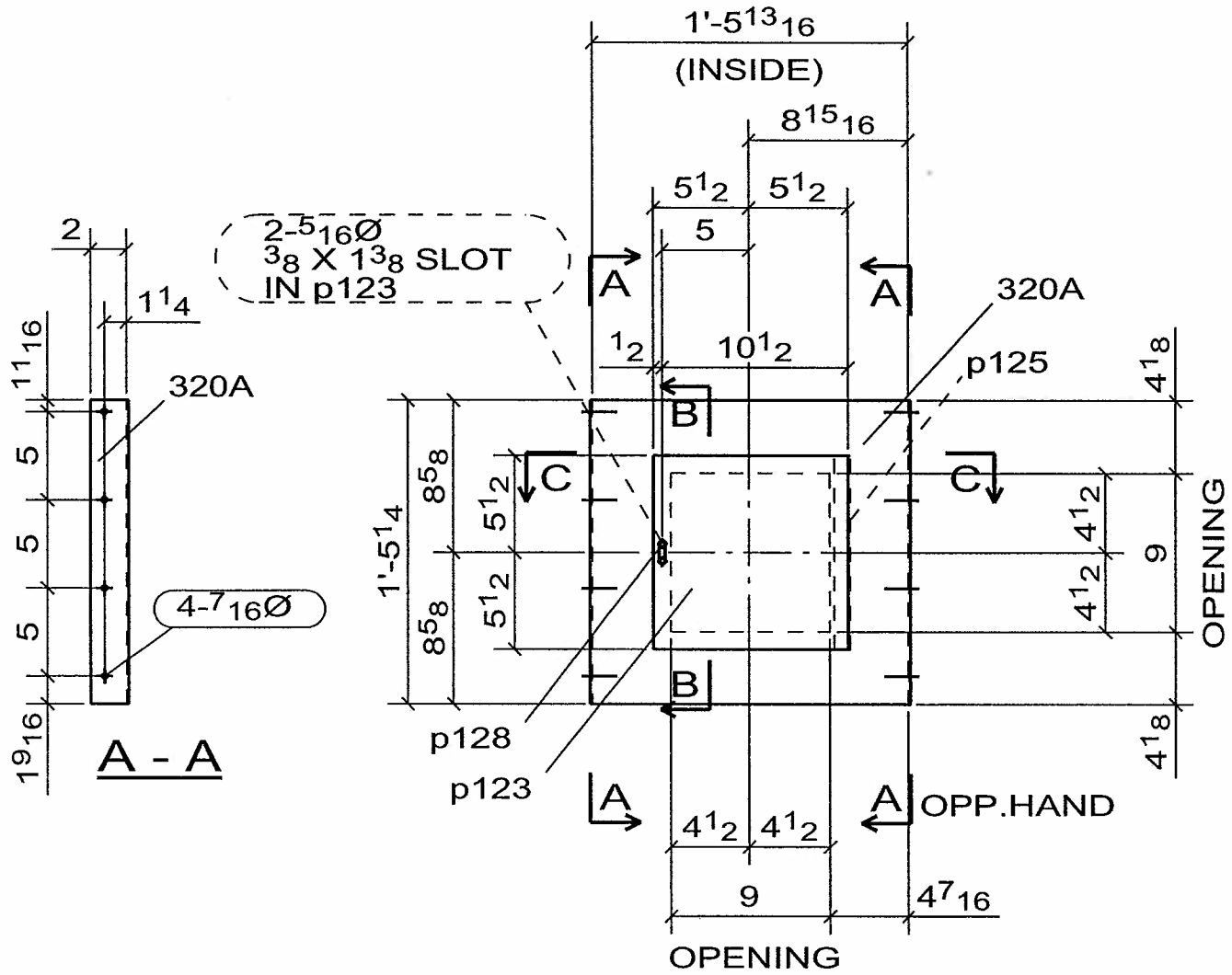

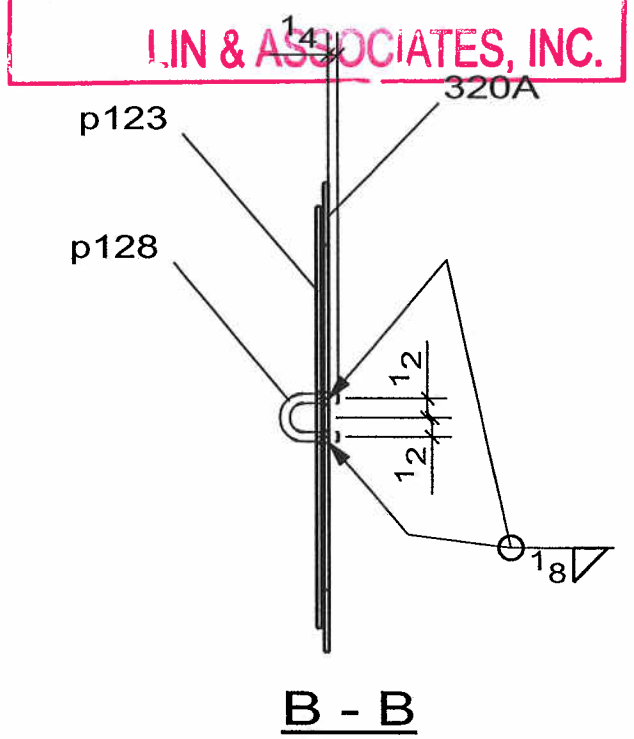

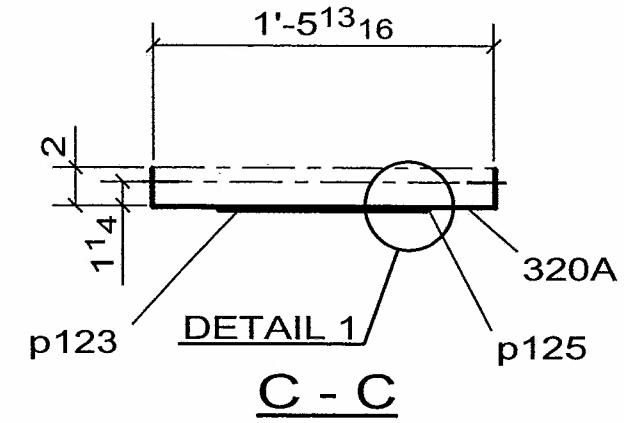

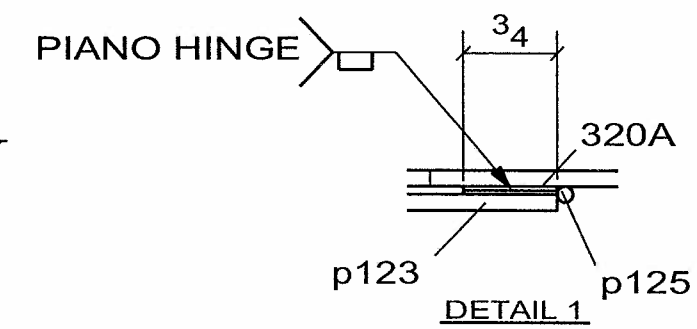

NOTE
DEBURR EDGES

WELD NOTE FOR ANY ASSEMBLY REQUIRING TACK WELDS:
- ALL TACK WELDS ARE TO BE MADE IN THE WELD JOINT ONLY

2 - SS_COVER -320A

No to SHIP	SHIP MARK	No PIECES	PIECE MARKS	DESCRIPTION	LENGTH	GRADE	REMARKS	WEIGHT	ADVANCE BILL
2	320A			SS_COVER			BRUSHED FINISH	15	
		2	320A	PL[redacted]7 1/4 X 11 GA	1'-9 13/16"	A304	BEND	11	
		2	p123	FB[redacted]11 X 11 GA	0'-11"	A304		4	
		2	p125	[redacted] SS PIANO HINGE	0'-11"	A304	W / HOLES	0	
		[redacted]						0	
		2	p128	ROD1/4	0'-3 3/8"	A304	BEND	0	

CONTRACTOR NOTE:
THIS DRAWING IS BEING SUBMITTED FOR APPROVAL AS REQUIRED. VERIFY OR SUPPLY ALL QUANTITIES, ALL DIMENSIONS, ALL INFORMATION, & ALL CONFIGURATIONS.

PRINT RECORD

NO.	USE	DATE
	APPR.	
	APPR.	
	PURCH	
	FAB	
	FAB. OFFICE	
	Q.A.	
	DIST.	
	ERECT.	

OPEN HOLES 15/16 Ø U/N
WELD BRIDGE WELDING CODE: D1.5
STEEL AS NOTED
BOLTS
SURFACE PREP-SP
PAINT SEE SPECS
REF.DRAWING E7, E8

REV	DATE	DESCRIPTION	
0	SEP/10/06	FOR APPROVAL	VS

RAINIER WELDING

19020 NE 84TH STREET - REDMOND, WA 98053
(425) 868-1300 FAX (425) 868-8872
STEEL AND ALUMINUM FABRICATING

PROJECT TOLT BRIDGE No 1834A
THIS DRAWING INCLUDES
FOR SNOHOMISH COUNTY OFFICIAL
DRAWN DJ DATE 07/31/2006
CHK DSC DATE 09/10/2006
DWG NUMBER 2707 - 320A 0

PRO DRAFT INC. PDI# 676 : PH:(604)589-6425
DRAWINGS PREPARED ON 3D-Xsteel File Name :- A [321.A]
Model Name: 725_102_TOLT_BRIDGE_541
Plot Date: 09/10/2006 12:21:28

☒ CONFORMS TO DESIGN CONCEPT
☐ CONFORMS TO DESIGN CONCEPT WITH REVISIONS AS SHOWN
☐ NON-CONFORMING–REVISE & RESUBMIT
THIS SHOP DRAWING HAS BEEN REVIEWED FOR GENERAL CONFORMANCE WITH DESIGN CONCEPT ONLY AND DOES NOT RELIEVE THE FABRICATOR/VENDOR OF RESPONSIBLITY FOR CONFORMANCE WITH DESIGN DRAWINGS AND SPECIFICATIONS ALL OF WHICH HAVE PRIORITY OVER THIS SHOP DRAWING.
By A.F. Date 10-13-06
LIN & ASSOCIATES, INC.

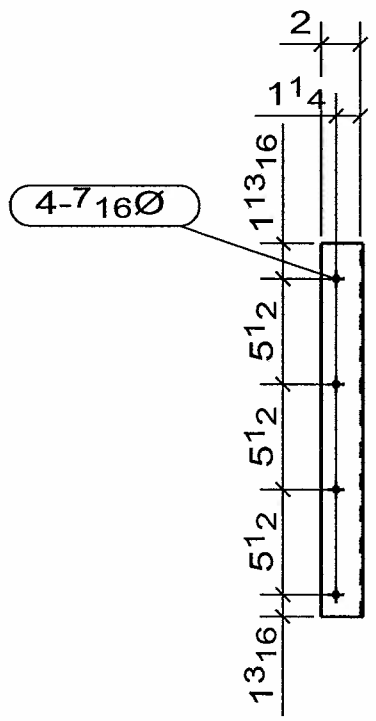

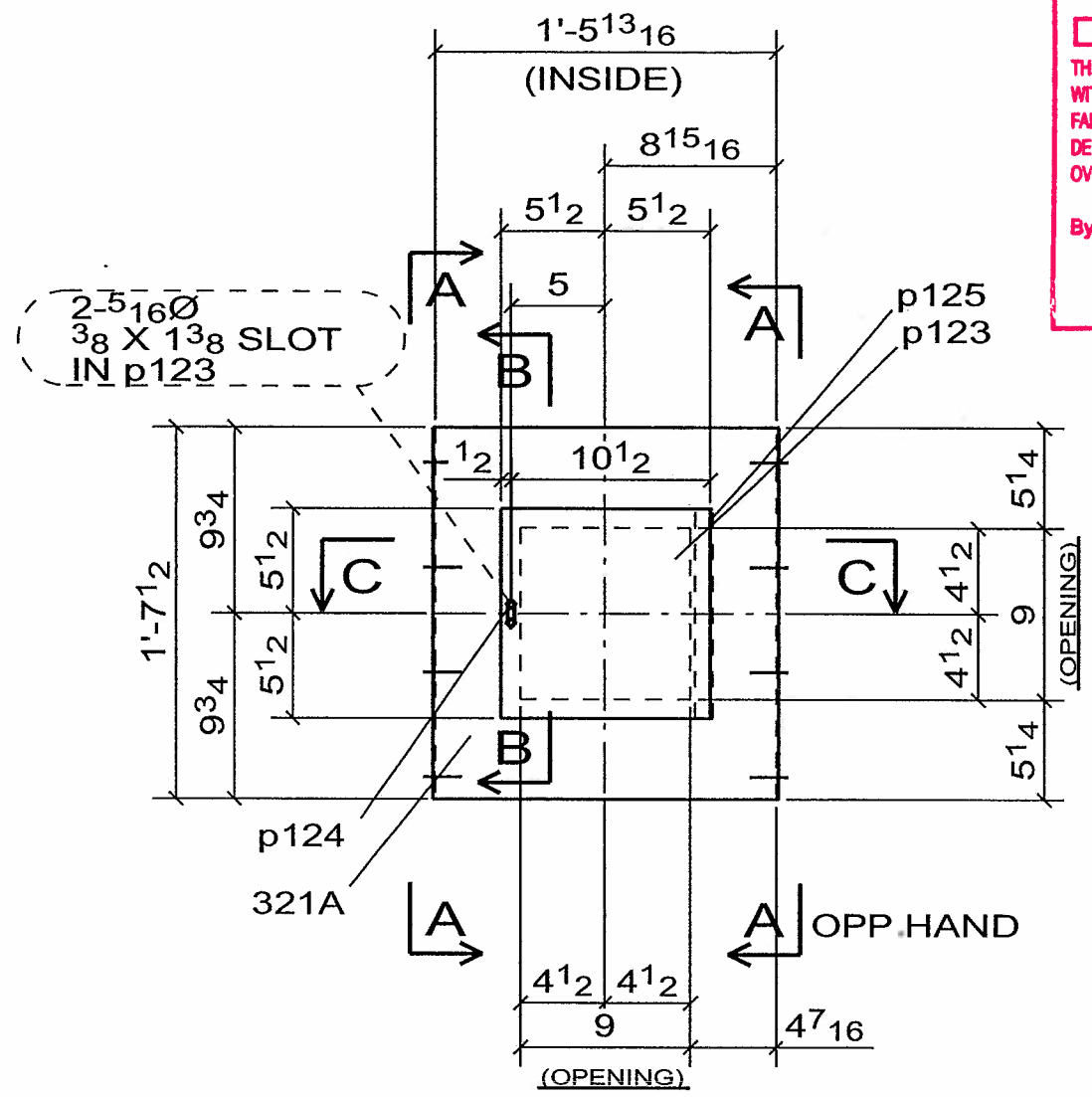

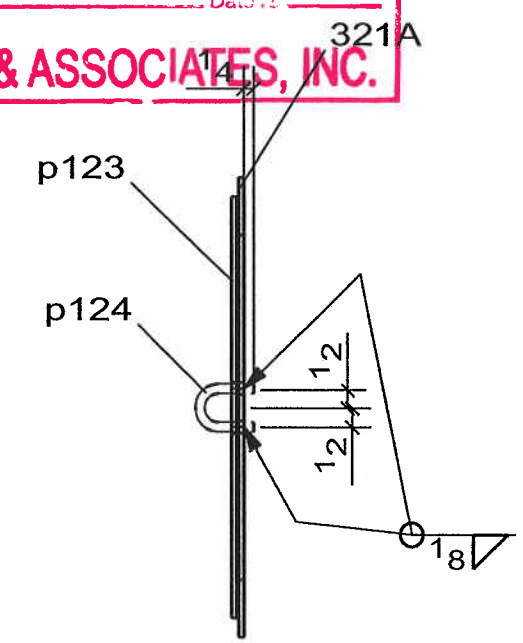

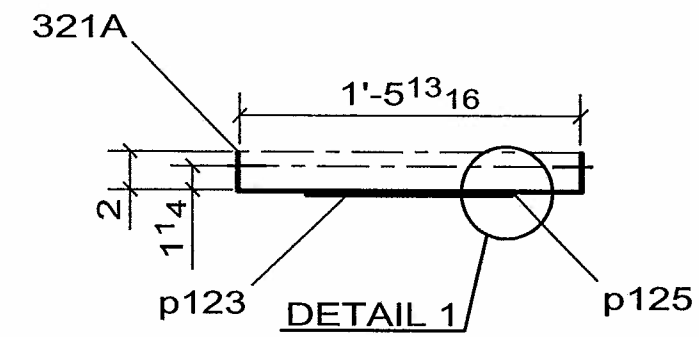

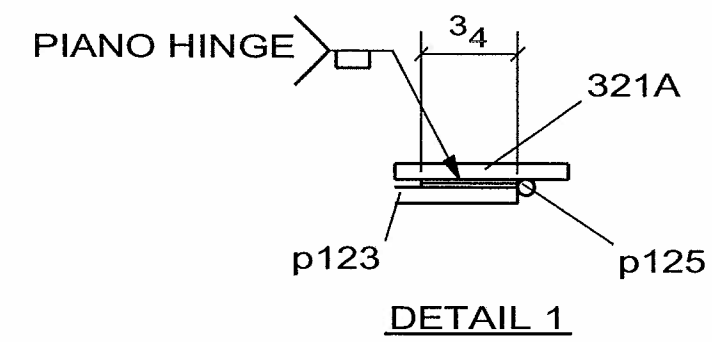

NOTE
DEBURR EDGES

WELD NOTE FOR ANY ASSEMBLY REQUIRING TACK WELDS:
- ALL TACK WELDS ARE TO BE MADE IN THE WELD JOINT ONLY

2 - SS_COVER -321A

No to SHIP	SHIP MARK	No PIECES	PIECE MARKS	DESCRIPTION	LENGTH	GRADE	REMARKS	WEIGHT	ADVANCE BILL
2	321A			SS_COVER		BRUSHED FINISH		17	
		2	321A	PL[redacted]19 1/2 X 11 GA	1'-9 13/16"	A304	BEND	13	
		2	p123	FB[redacted]11 X 11 GA	0'-11"	A304		4	
		2	p124	ROD1/4	0'-3 3/8"	A304	BEND	0	
		2	p125	[redacted] SS PIANO HINGE	0'-11"	A304	W / HOLES	0	
		[redacted]						0	

CONTRACTOR NOTE:
THIS DRAWING IS BEING SUBMITTED FOR APPROVAL AS REQUIRED. VERIFY OR SUPPLY ALL QUANTITIES, ALL DIMENSIONS, ALL INFORMATION, & ALL CONFIGURATIONS.

PRINT RECORD

NO.	USE	DATE
	APPR.	
	APPR.	
	PURCH	
	FAB	
	FAB. OFFICE	
	Q.A.	
	DIST.	
	ERECT.	

OPEN HOLES: 15/16 Ø U/N
WELD: BRIDGE WELDING CODE: D1.5
STEEL: AS NOTED
BOLTS:
SURFACE PREP-SP:
PAINT: SEE SPECS
REF.DRAWING: E7, E8

REV	DATE	DESCRIPTION	
0	SEP/10/06	FOR APPROVAL	VS

RAINIER WELDING

19020 NE 84TH STREET - REDMOND, WA 98053
(425) 868-1300 FAX (425) 868-8872
STEEL AND ALUMINUM FABRICATING

PROJECT: TOLT BRIDGE No 1834A
THIS DRAWING INCLUDES:
FOR: SNOHOMISH COUNTY OFFICIAL
DRAWN DJ DATE 07/31/2006 CHK DSC DATE 09/10/2006 DWG NUMBER 2707 - 321A △0

PRO DRAFT INC. PDI# 676 PH:(604)589-6425
DRAWINGS PREPARED ON 3D-Xsteel File Name :- A [322.A]
Model Name: 725_102_TOLT_BRIDGE_541
Plot Date: 09/10/2006 12:21:29

☒ CONFORMS TO DESIGN CONCEPT
☐ CONFORMS TO DESIGN CONCEPT WITH REVISIONS AS SHOWN
☐ NON-CONFORMING–REVISE & RESUBMIT
THIS SHOP DRAWING HAS BEEN REVIEWED FOR GENERAL CONFORMANCE WITH DESIGN CONCEPT ONLY AND DOES NOT RELIEVE THE FABRICATOR/VENDOR OF RESPONSIBLITY FOR CONFORMANCE WITH DESIGN DRAWINGS AND SPECIFICATIONS ALL OF WHICH HAVE PRIORITY OVER THIS SHOP DRAWING.
By A.F. Date 10-13-06
LIN & ASSOCIATES, INC.

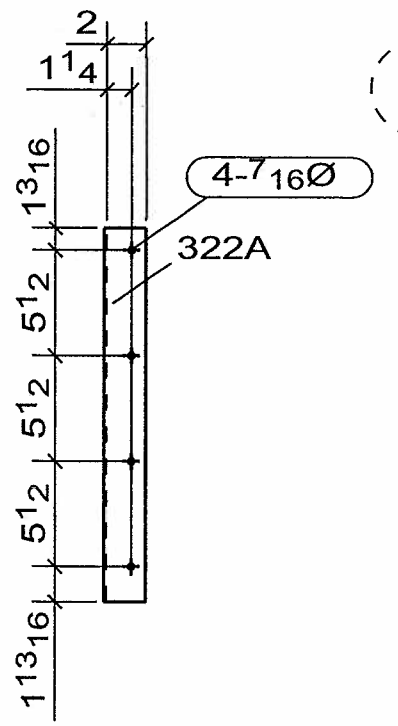

A - A

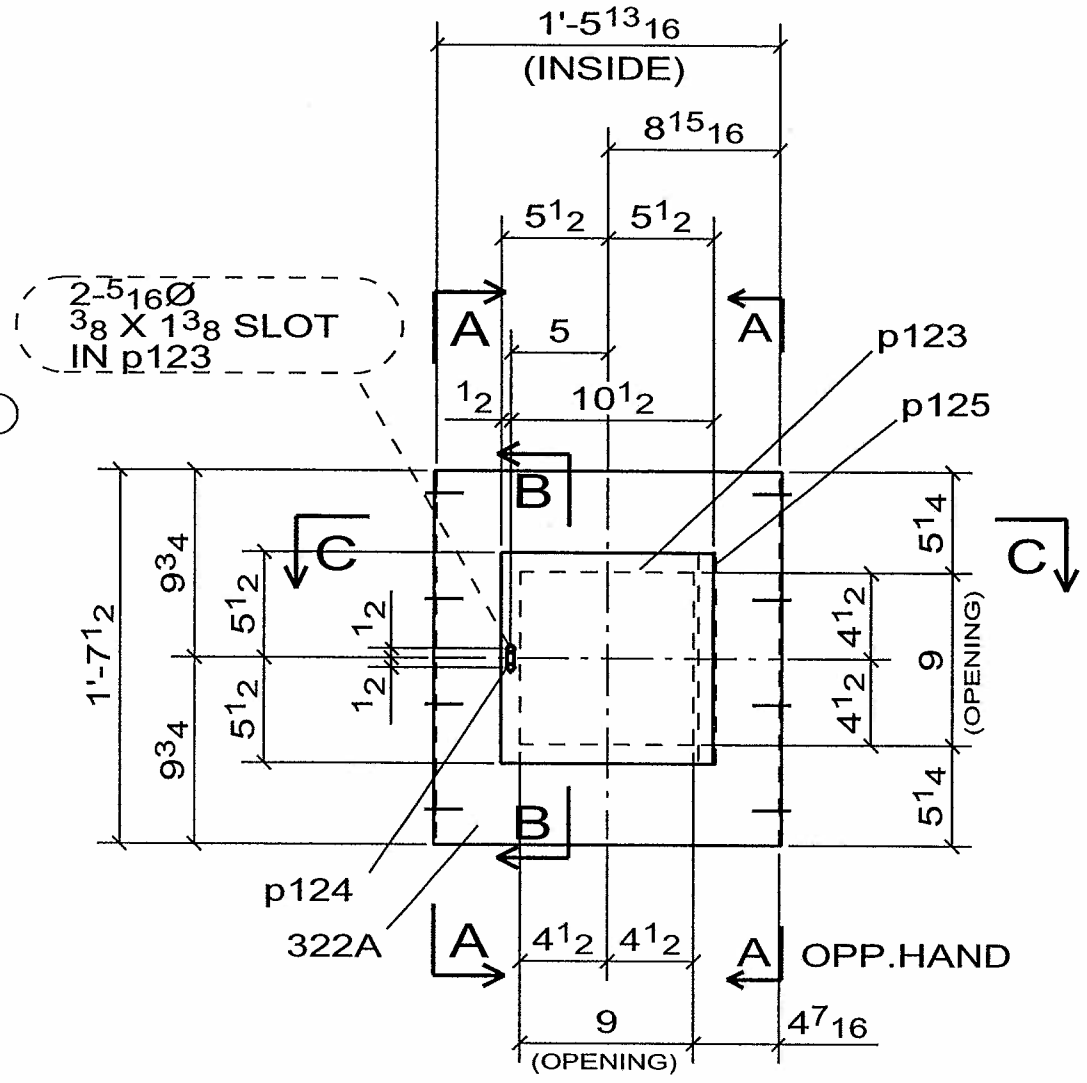

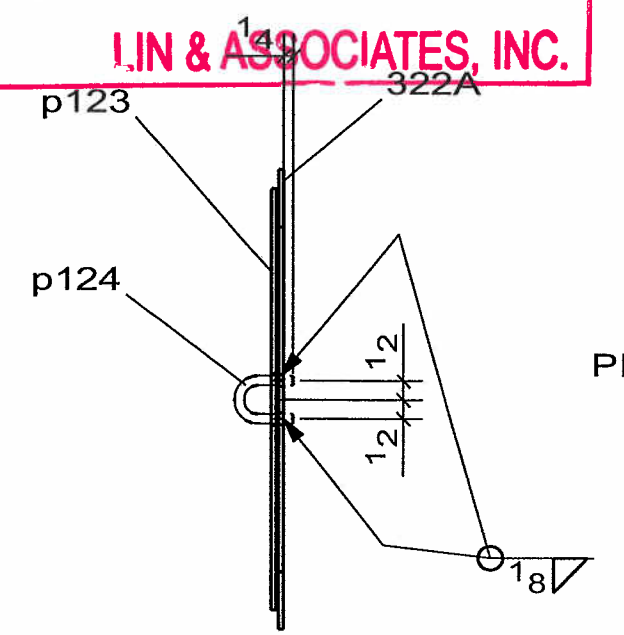

B - B

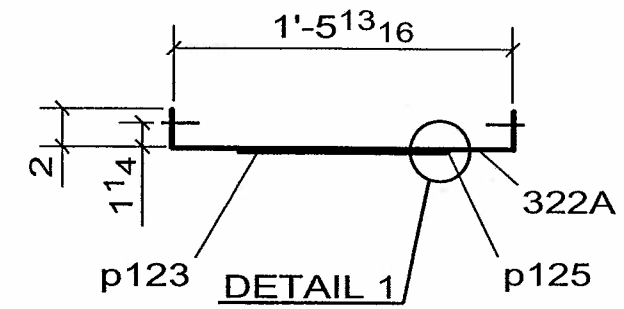

DETAIL 1

C - C

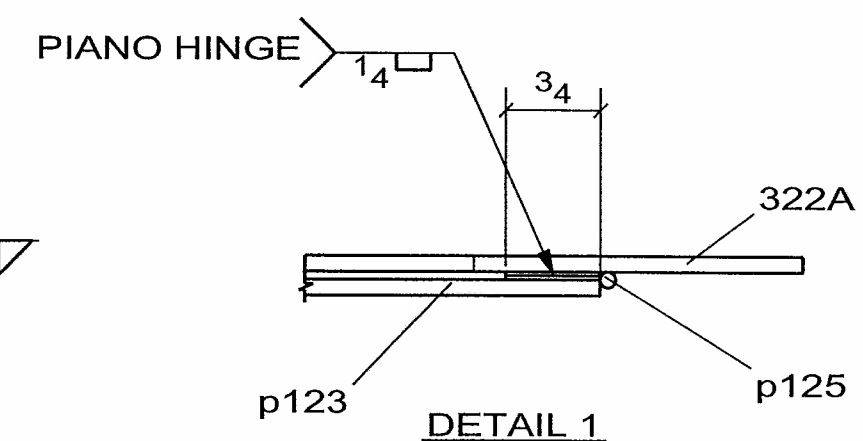

DETAIL 1

NOTE

DEBURR EDGES

WELD NOTE FOR ANY ASSEMBLY REQUIRING TACK WELDS:
- ALL TACK WELDS ARE TO BE MADE IN THE WELD JOINT ONLY

2 - SS_COVER -322A

No to SHIP	SHIP MARK	No PIECES	PIECE MARKS	DESCRIPTION	LENGTH	GRADE	REMARKS	WEIGHT	ADVANCE BILL
2	322A			SS_COVER		BRUSHED FINISH		17	
		2	322A	PL[redacted]19 1/2 X 11 GA.	1'-9 13/16"	A304	BEND	13	
		2	p123	FB[redacted]11 X 11 GA.	0'-11"	A304		4	
		2	p124	ROD1/4	0'-3 3/8"	A304	BEND	0	
		2	p125	[redacted] SS PIANO HINGE	0'-11"	A304	W / HOLES	0	
		[redacted]						0	

CONTRACTOR NOTE:
THIS DRAWING IS BEING SUBMITTED FOR APPROVAL AS REQUIRED. VERIFY OR SUPPLY ALL QUANTITIES, ALL DIMENSIONS, ALL INFORMATION, & ALL CONFIGURATIONS.

PRINT RECORD

NO.	USE	DATE
	APPR.	
	APPR.	
	PURCH	
	FAB	
	FAB. OFFICE	
	Q.A.	
	DIST.	
	ERECT.	

OPEN HOLES: 15/16 Ø U/N
WELD: BRIDGE WELDING CODE: D1.5
STEEL: AS NOTED
BOLTS:
SURFACE PREP-SP:
PAINT: SEE SPECS
REF.DRAWING: E6, E9

REV	DATE	DESCRIPTION	
0	SEP/10/06	FOR APPROVAL	VS

RAINIER WELDING

19020 NE 84TH STREET - REDMOND, WA 98053
(425) 868-1300 FAX (425) 868-8872
STEEL AND ALUMINUM FABRICATING

PROJECT: TOLT BRIDGE No 1834A
THIS DRAWING INCLUDES:
FOR: SNOHOMISH COUNTY OFFICIAL

DRAWN DJ DATE 07/31/2006 | CHK DSC DATE 09/10/2006 | DWG NUMBER 2707 - 322A | 0

PRO DRAFT INC. PDI# 676 : PH:(604)589-6425
DRAWINGS PREPARED ON 3D-Xsteel File Name :- A [323.A]
Model Name: 725_102_TOLT_BRIDGE_541
Plot Date: 09/10/2006 12:21:31

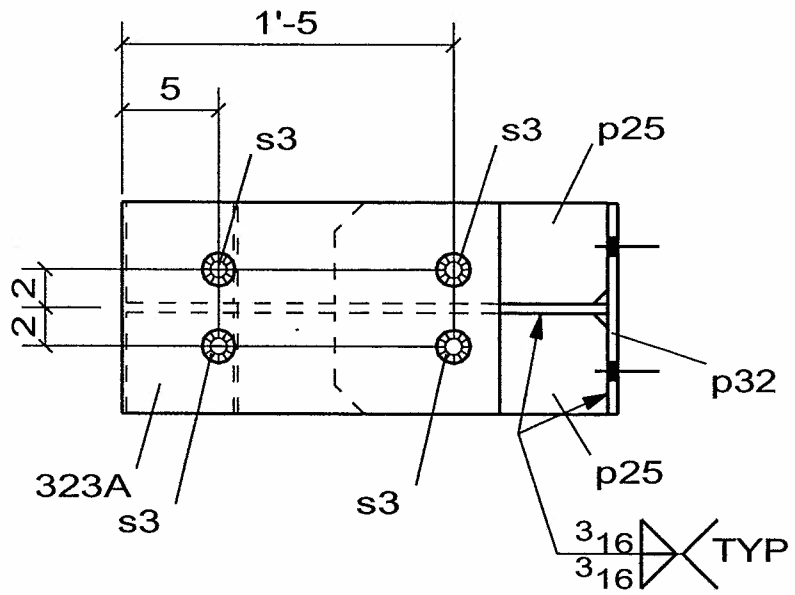

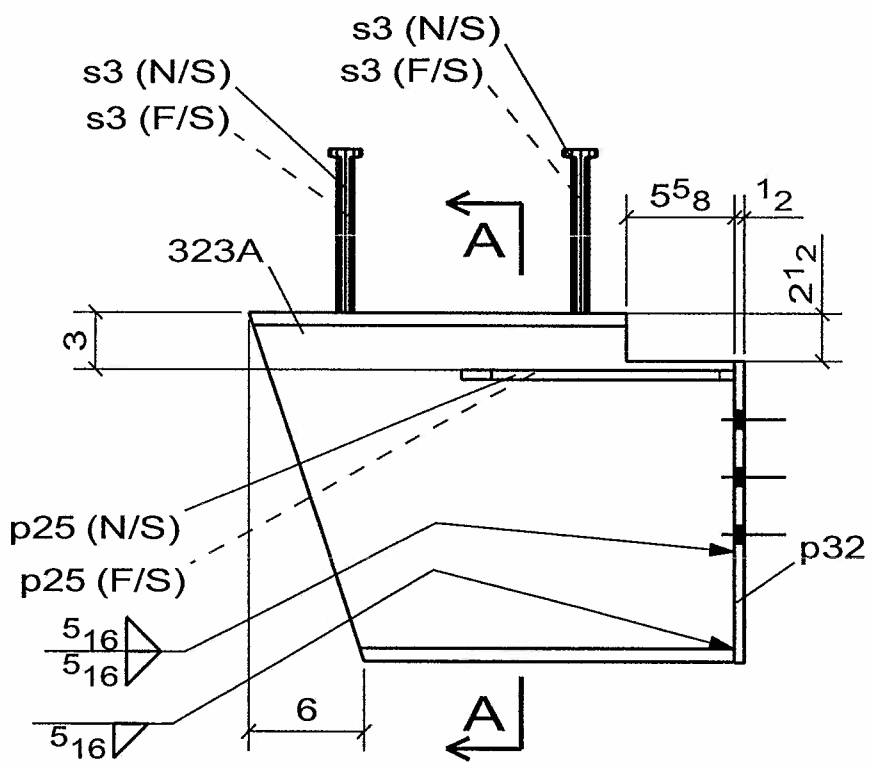

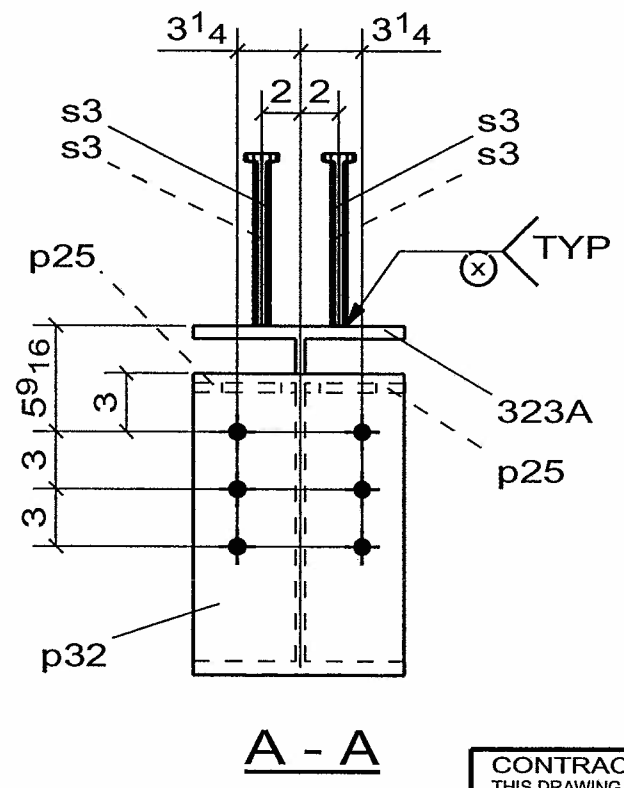

☒ CONFORMS TO DESIGN CONCEPT
☐ CONFORMS TO DESIGN CONCEPT WITH REVISIONS AS SHOWN
☐ NON-CONFORMING-REVISE & RESUBMIT
THIS SHOP DRAWING HAS BEEN REVIEWED FOR GENERAL CONFORMANCE WITH DESIGN CONCEPT ONLY AND DOES NOT RELIEVE THE FABRICATOR/VENDOR OF RESPONSIBLITY FOR CONFORMANCE WITH DESIGN DRAWINGS AND SPECIFICATIONS ALL OF WHICH HAVE PRIORITY OVER THIS SHOP DRAWING.
By A.F. Date 10-13-06
LIN & ASSOCIATES, INC.

WELD NOTE FOR ANY ASSEMBLY REQUIRING TACK WELDS:
- ALL TACK WELDS ARE TO BE MADE IN THE WELD JOINT ONLY

2 - STRINGER -323A

No to SHIP	SHIP MARK	No PIECES	PIECE MARKS	DESCRIPTION	LENGTH	GRADE	REMARKS	WEIGHT	ADVANCE BILL
2	323A			STRINGER				210	
		2	323A	W18X76	2'-1 1/16"	AASHTO M 270 GR. 50		158	
		4	p25	PL1/2X5 1/4	1'-2"	AASHTO M 270 GR. 50		11	
		2	p32	FB1/2X11	1'-3 3/4"	AASHTO M 270 GR. 50		25	
		8	s3	STUD-7/8-DIA	0'-9"	A108		2	

CONTRACTOR NOTE:
THIS DRAWING IS BEING SUBMITTED FOR APPROVAL AS REQUIRED. VERIFY OR SUPPLY ALL QUANTITIES, ALL DIMENSIONS, ALL INFORMATION, & ALL CONFIGURATIONS.

PRINT RECORD

NO.	USE	DATE
	APPR.	
	APPR.	
	PURCH	
	FAB	
	FAB. OFFICE	
	Q.A.	
	DIST.	
	ERECT.	

OPEN HOLES: 15/16 Ø U/N
WELD: BRIDGE WELDING CODE: D1.5
STEEL: AS NOTED
BOLTS:
SURFACE PREP-SP:
PAINT: SEE SPECS
REF.DRAWING: E2, E3

REV	DATE	DESCRIPTION	
0	SEP/10/06	FOR APPROVAL	VS

RAINIER WELDING

19020 NE 84TH STREET - REDMOND, WA 98053
(425) 868-1300 FAX (425) 868-8872
STEEL AND ALUMINUM FABRICATING

PROJECT: TOLT BRIDGE No 1834A
THIS DRAWING INCLUDES:
FOR: SNOHOMISH COUNTY OFFICIAL
DRAWN DATE 08/26/2006
CHK DATE 09/10/2006
DWG NUMBER 2707 - 323A
0

PRO DRAFT INC. PDI# 676 : PH:(604)589-6425
DRAWINGS PREPARED ON 3D-Xsteel File Name :- A [327.A]
Model Name: 725_102_TOLT_BRIDGE_541
Plot Date: 09/10/2006 12:21:31

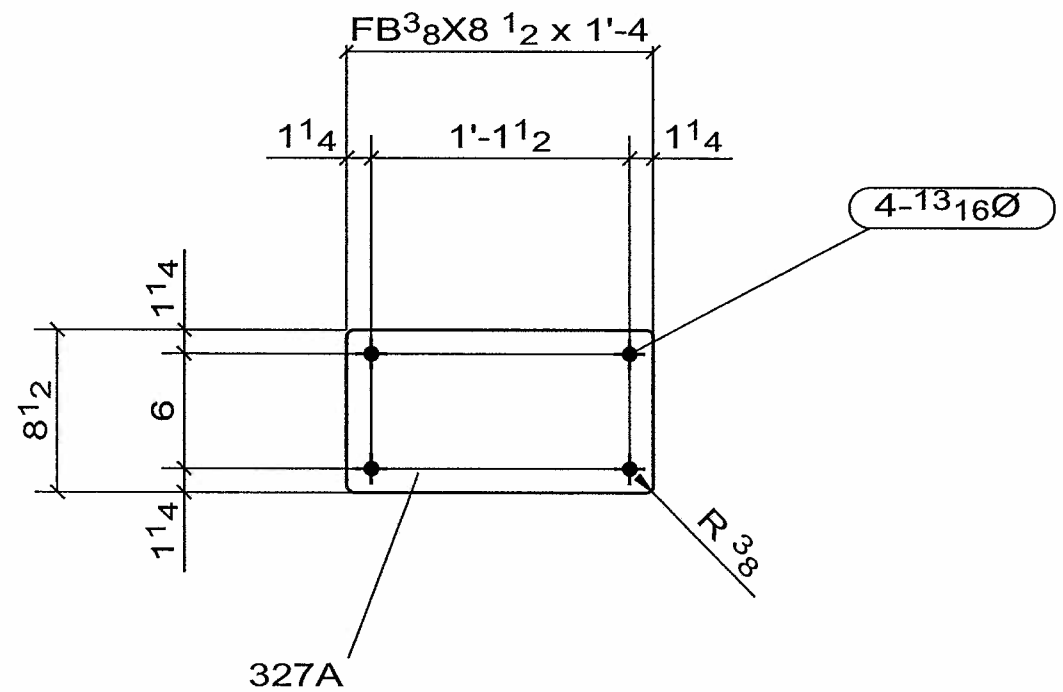

☒ CONFORMS TO DESIGN CONCEPT
☐ CONFORMS TO DESIGN CONCEPT WITH REVISIONS AS SHOWN
☐ NON-CONFORMING–REVISE & RESUBMIT

THIS SHOP DRAWING HAS BEEN REVIEWED FOR GENERAL CONFORMANCE WITH DESIGN CONCEPT ONLY AND DOES NOT RELIEVE THE FABRICATOR/VENDOR OF RESPONSIBLITY FOR CONFORMANCE WITH DESIGN DRAWINGS AND SPECIFICATIONS ALL OF WHICH HAVE PRIORITY OVER THIS SHOP DRAWING.

By A.F. Date: 10-13-06

LIN & ASSOCIATES, INC.

WELD NOTE FOR ANY ASSEMBLY REQUIRING TACK WELDS:
- ALL TACK WELDS ARE TO BE MADE IN THE WELD JOINT ONLY

CONTRACTOR NOTE:
THIS DRAWING IS BEING SUBMITTED FOR APPROVAL AS REQUIRED. VERIFY OR SUPPLY ALL QUANTITIES, ALL DIMENSIONS, ALL INFORMATION, & ALL CONFIGURATIONS.

PRINT RECORD

NO.	USE	DATE
	APPR.	
	APPR.	
	PURCH	
	FAB	
	FAB. OFFICE	
	Q.A.	
	DIST.	
	ERECT.	

OPEN HOLES: 15/16 Ø U/N
WELD: BRIDGE WELDING CODE: D1.5
STEEL: AS NOTED
BOLTS:
SURFACE PREP-SP:
PAINT: SEE SPECS
REF.DRAWING: E8

REV	DATE	DESCRIPTION	
0	SEP/10/06	FOR APPROVAL	VS

RAINIER WELDING

19020 NE 84TH STREET - REDMOND, WA 98053
(425) 868-1300 FAX (425) 868-8872
STEEL AND ALUMINUM FABRICATING

PROJECT: TOLT BRIDGE No 1834A
THIS DRAWING INCLUDES:
FOR: SNOHOMISH COUNTY OFFICIAL

DRAWN DJ DATE 08/24/2006 | CHK DSC DATE 09/10/2006 | DWG NUMBER 2707 - 327A | 0

2 - COVER_PL -327A

No to SHIP	SHIP MARK	No PIECES	PIECE MARKS	DESCRIPTION	LENGTH	GRADE	REMARKS	WEIGHT	ADVANCE BILL
2	327A			COVER_PL				14	
		2	327A	FB3/8X8 1/2	1'-4"	AASHTO M 270 GR. 50		14	

PRO DRAFT INC. PDI# 676 : PH:(604)589-6425
DRAWINGS PREPARED ON 3D-Xsteel File Name :- A [343.A]
Model Name: 725_102_TOLT_BRIDGE_541
Plot Date: 09/10/2006 12:21:33

PER PLAN, 2 3/4" @ CENTER OF BEARING

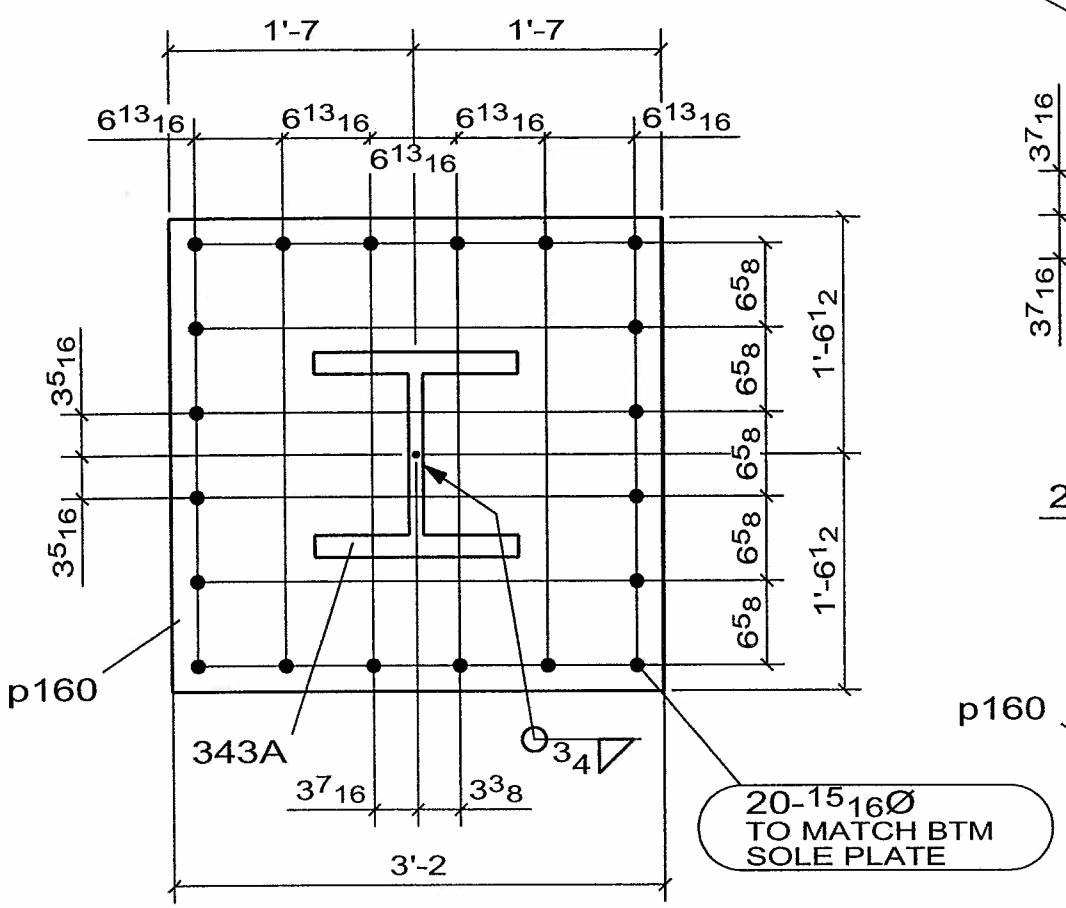

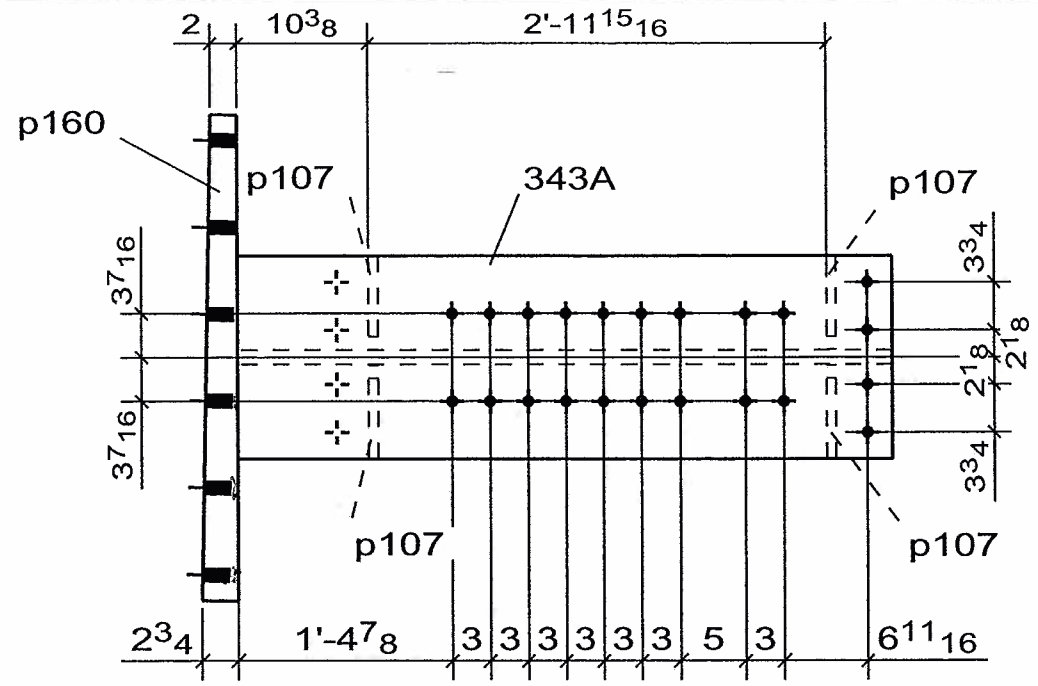

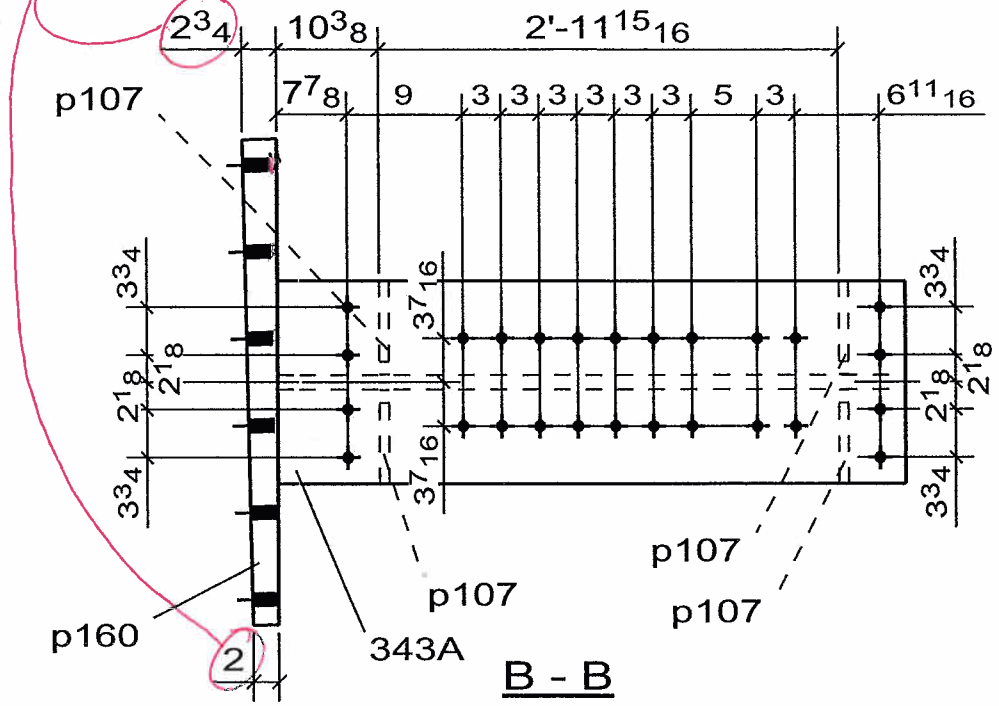

B - B

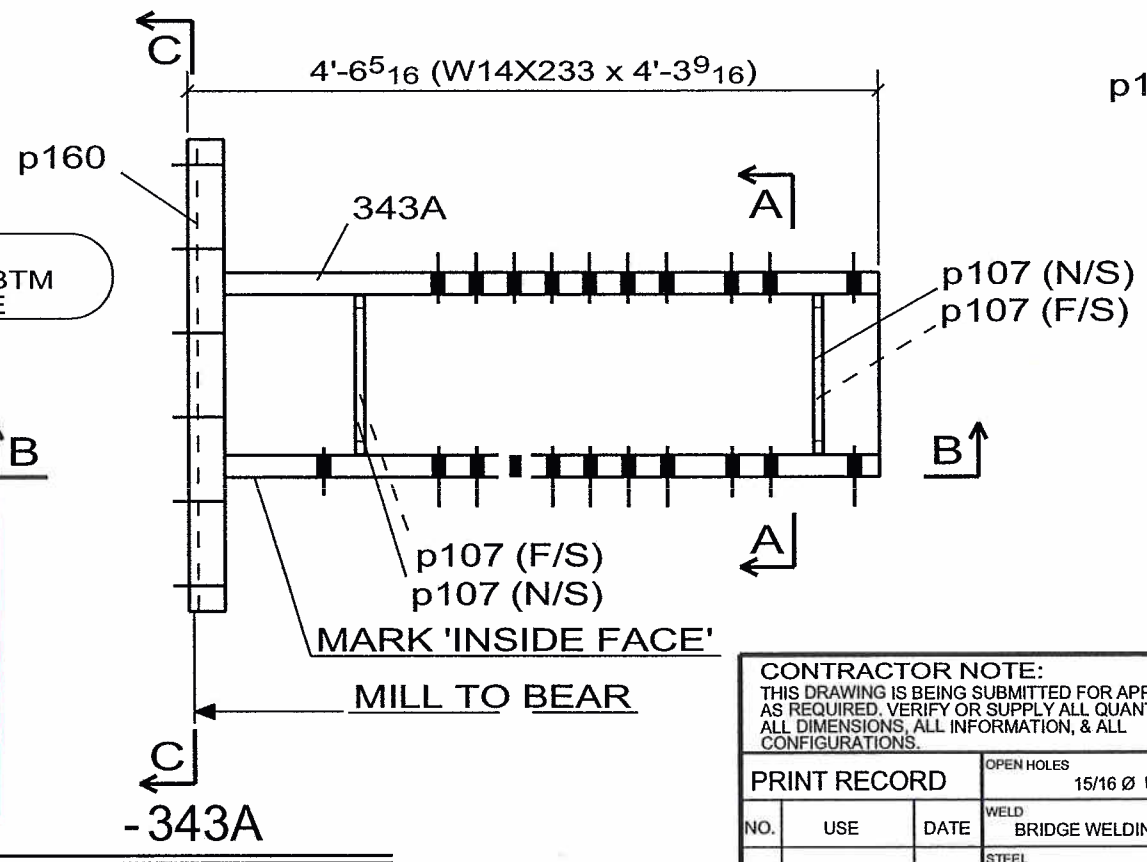

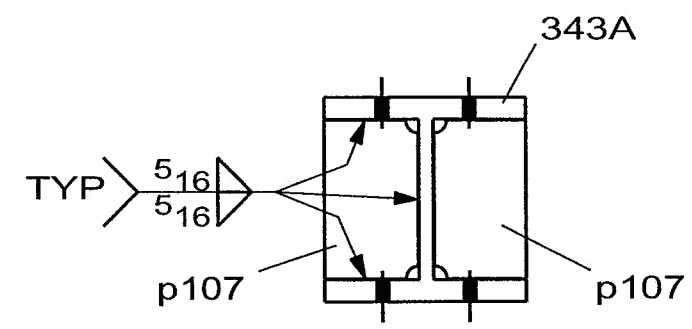

A - A

WELD NOTE FOR ANY ASSEMBLY REQUIRING TACK WELDS:
- ALL TACK WELDS ARE TO BE MADE IN THE WELD JOINT ONLY

☐ CONFORMS TO DESIGN CONCEPT
☐ CONFORMS TO DESIGN CONCEPT WITH REVISIONS AS SHOWN
☒ NON-CONFORMING-REVISE & RESUBMIT
THIS SHOP DRAWING HAS BEEN REVIEWED FOR GENERAL CONFORMANCE WITH DESIGN CONCEPT ONLY AND DOES NOT RELIEVE THE FABRICATOR/VENDOR OF RESPONSIBILITY FOR CONFORMANCE WITH DESIGN DRAWINGS AND SPECIFICATIONS ALL OF WHICH HAVE PRIORITY OVER THIS SHOP DRAWING.
By A.F. Date 10/13/06
LIN & ASSOCIATES, INC.

1 - POST

No to SHIP	SHIP MARK	No PIECES	PIECE MARKS	DESCRIPTION	LENGTH	GRADE	REMARKS	WEIGHT	ADVANCE BILL
1	343A			POST				2032	
		1	343A	W14X233	4'-3 9/16"	AASHTO M 270 GR. 50		1002	
		4	p107	PL3/4X7 5/16 TAPERED ?	1'-0 7/16"	AASHTO M 270 GR. 50		19	
		1	p160	PL2 3/4X37 NOT SUFFICIENT THK	3'-2"	AASHTO M 270 GR. 50		953	

CONTRACTOR NOTE:
THIS DRAWING IS BEING SUBMITTED FOR APPROVAL AS REQUIRED. VERIFY OR SUPPLY ALL QUANTITIES, ALL DIMENSIONS, ALL INFORMATION, & ALL CONFIGURATIONS.

PRINT RECORD

NO.	USE	DATE
	APPR.	
	APPR.	
	PURCH	
	FAB	
	FAB. OFFICE	
	Q.A.	
	DIST.	
	ERECT.	

OPEN HOLES 15/16 Ø U/N
WELD BRIDGE WELDING CODE: D1.5
STEEL AS NOTED
BOLTS
SURFACE PREP-SP
PAINT SEE SPECS
REF.DRAWING E8

REV	DATE	DESCRIPTION	
0	SEP/10/06	FOR APPROVAL	VS

RAINIER WELDING

19020 NE 84TH STREET - REDMOND, WA 98053
(425) 868-1300 FAX (425) 868-8872
STEEL AND ALUMINUM FABRICATING

PROJECT TOLT BRIDGE No 1834A
THIS DRAWING INCLUDES
FOR SNOHOMISH COUNTY OFFICIAL
DRAWN AT DATE 09/08/2006
CHK DSC DATE 09/10/2006
DWG NUMBER 2707 - 343A 0

PRO DRAFT INC. PDI# 676 PH:(604)589-6425
DRAWINGS PREPARED ON 3D-Xsteel File Name :- A [344.A]
Model Name: 725_102_TOLT_BRIDGE_541
Plot Date: 09/10/2006 12:21:35

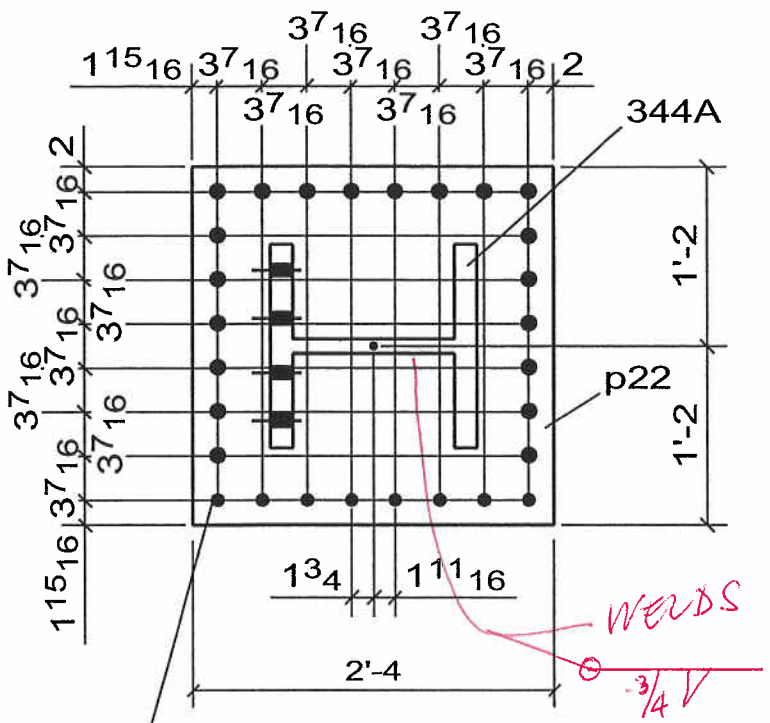

D - D

DRILL & TAP TO SUIT 1Ø BOLT
TO MATCH BTM SOLE PLATE

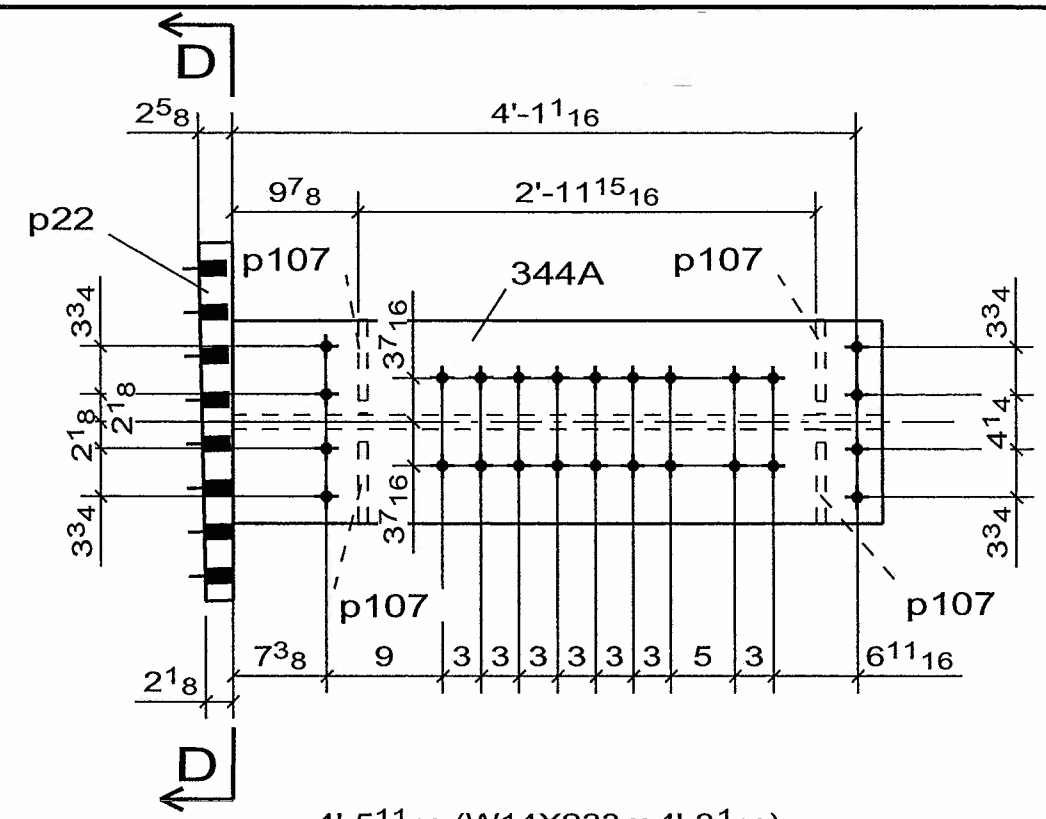

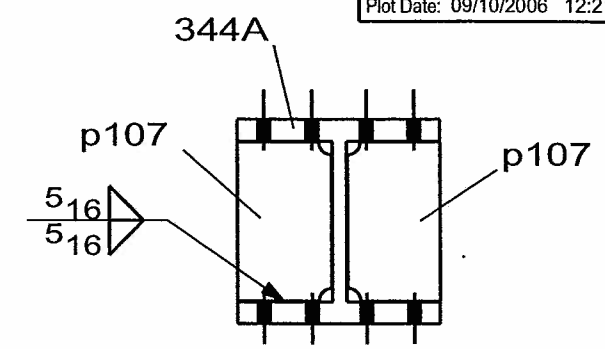

B - B

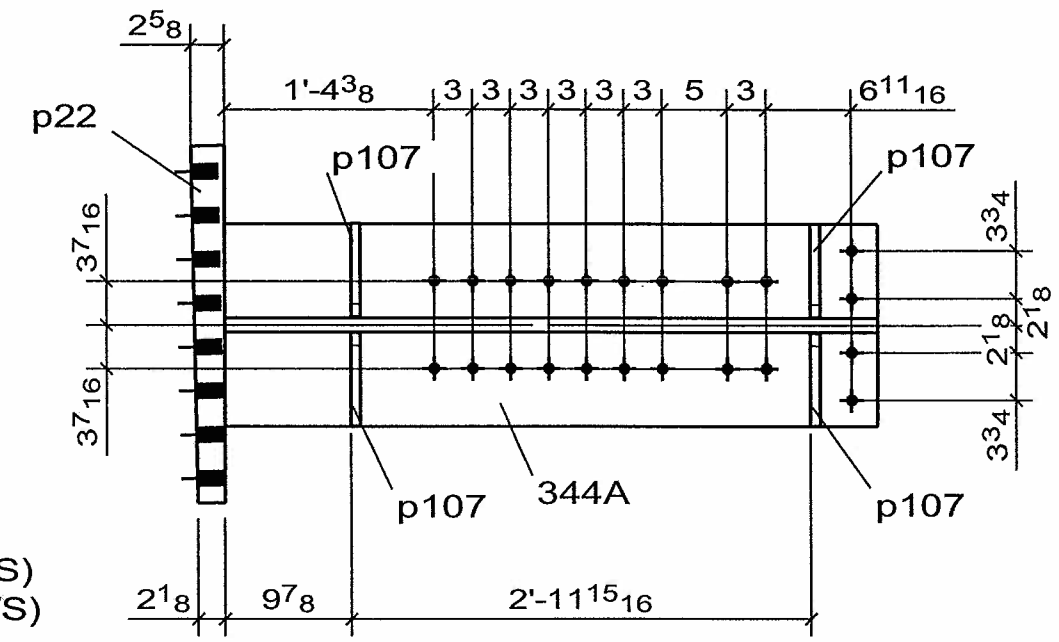

C - C

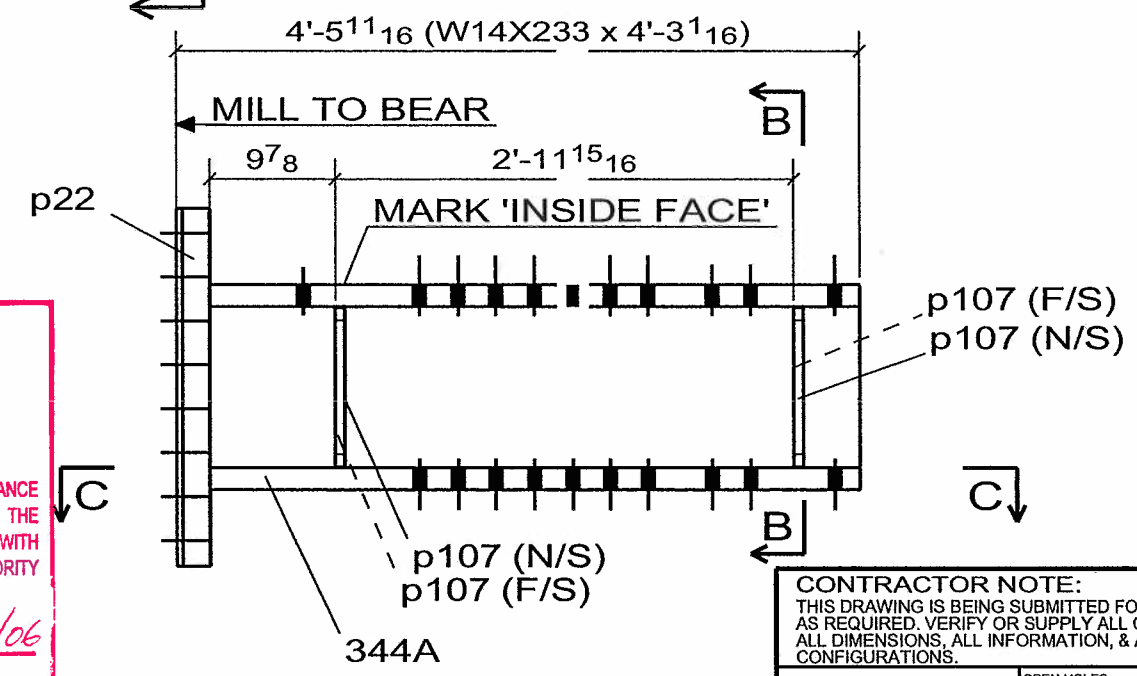

CONFORMS TO DESIGN CONCEPT
☒ CONFORMS TO DESIGN CONCEPT WITH REVISIONS AS SHOWN
☐ NON-CONFORMING-REVISE & RESUBMIT
THIS SHOP DRAWING HAS BEEN REVIEWED FOR GENERAL CONFORMANCE WITH DESIGN CONCEPT ONLY AND DOES NOT RELIEVE THE FABRICATOR/VENDOR OF RESPONSIBLITY FOR CONFORMANCE WITH DESIGN DRAWINGS AND SPECIFICATIONS ALL OF WHICH HAVE PRIORITY OVER THIS SHOP DRAWING.
By A.F. Date 10/13/06
LIN & ASSOCIATES, INC.

1 POST - 344A

WELD NOTE FOR ANY ASSEMBLY REQUIRING TACK WELDS:
- ALL TACK WELDS ARE TO BE MADE IN THE WELD JOINT ONLY

CONTRACTOR NOTE:
THIS DRAWING IS BEING SUBMITTED FOR APPROVAL AS REQUIRED. VERIFY OR SUPPLY ALL QUANTITIES, ALL DIMENSIONS, ALL INFORMATION, & ALL CONFIGURATIONS.

PRINT RECORD			
NO.	USE	DATE	OPEN HOLES 15/16 Ø U/N
	APPR.		WELD BRIDGE WELDING CODE: D1.5
	APPR.		STEEL AS NOTED
	PURCH		BOLTS
	FAB		SURFACE PREP-SP
	FAB. OFFICE		PAINT SEE SPECS
	Q.A.		REF.DRAWING E9
	DIST.		
	ERECT		

REV	DATE	DESCRIPTION	
0	SEP/10/06	FOR APPROVAL	VS

No to SHIP	SHIP MARK	No PIECES	PIECE MARKS	DESCRIPTION	LENGTH	GRADE	REMARKS	WEIGHT	ADVANCE BILL
1	344A			POST				1601	
		1	344A	W14X233	4'-3 1/16"	AASHTO M 270 GR. 50		992	
		1	p22	PL2 3/4X28 TAPERED	2'-4"	AASHTO M 270 GR. 50		531	
		4	p107	PL3/4X7 5/16	1'-0 7/16"	AASHTO M 270 GR. 50		19	

RAINIER WELDING
19020 NE 84TH STREET - REDMOND, WA 98053
(425) 868-1300 FAX (425) 868-8872
STEEL AND ALUMINUM FABRICATING

PROJECT: TOLT BRIDGE No 1834A
THIS DRAWING INCLUDES:
FOR: SNOHOMISH COUNTY OFFICIAL
DRAWN AT DATE 09/08/2006 | CHK DSC DATE 09/10/2006 | DWG NUMBER 2707 - 344A | 0