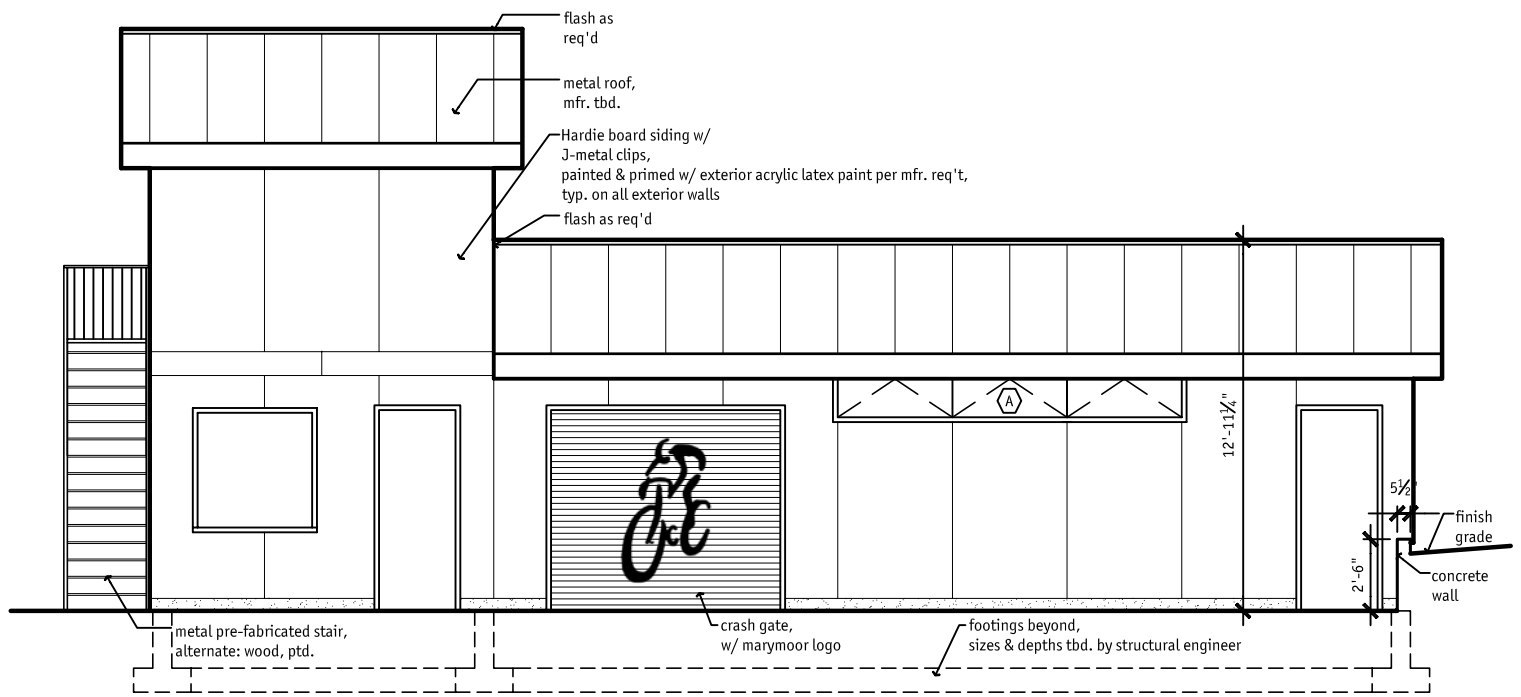

1 west elevation
1/4" = 1'-0"

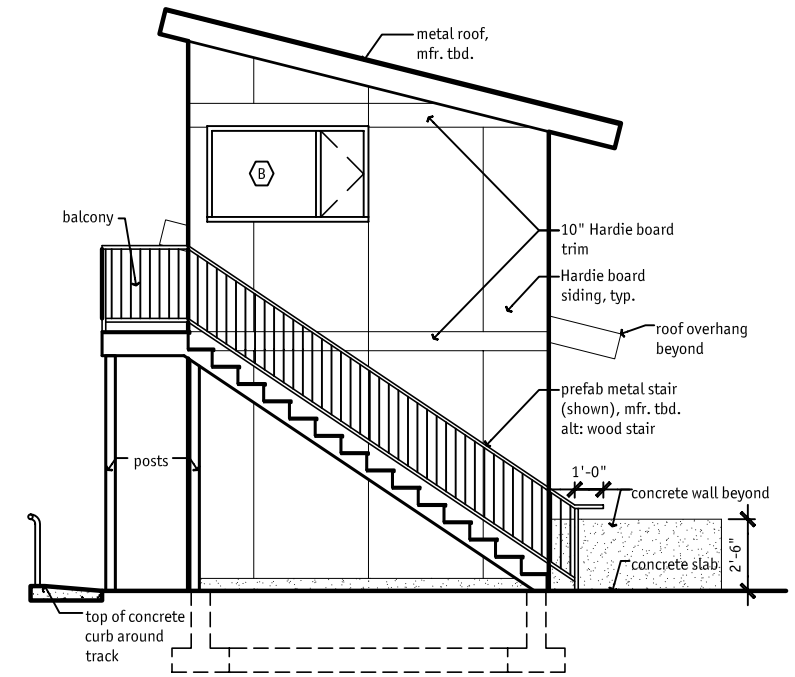

3 north elevation
1/4" = 1'-0"

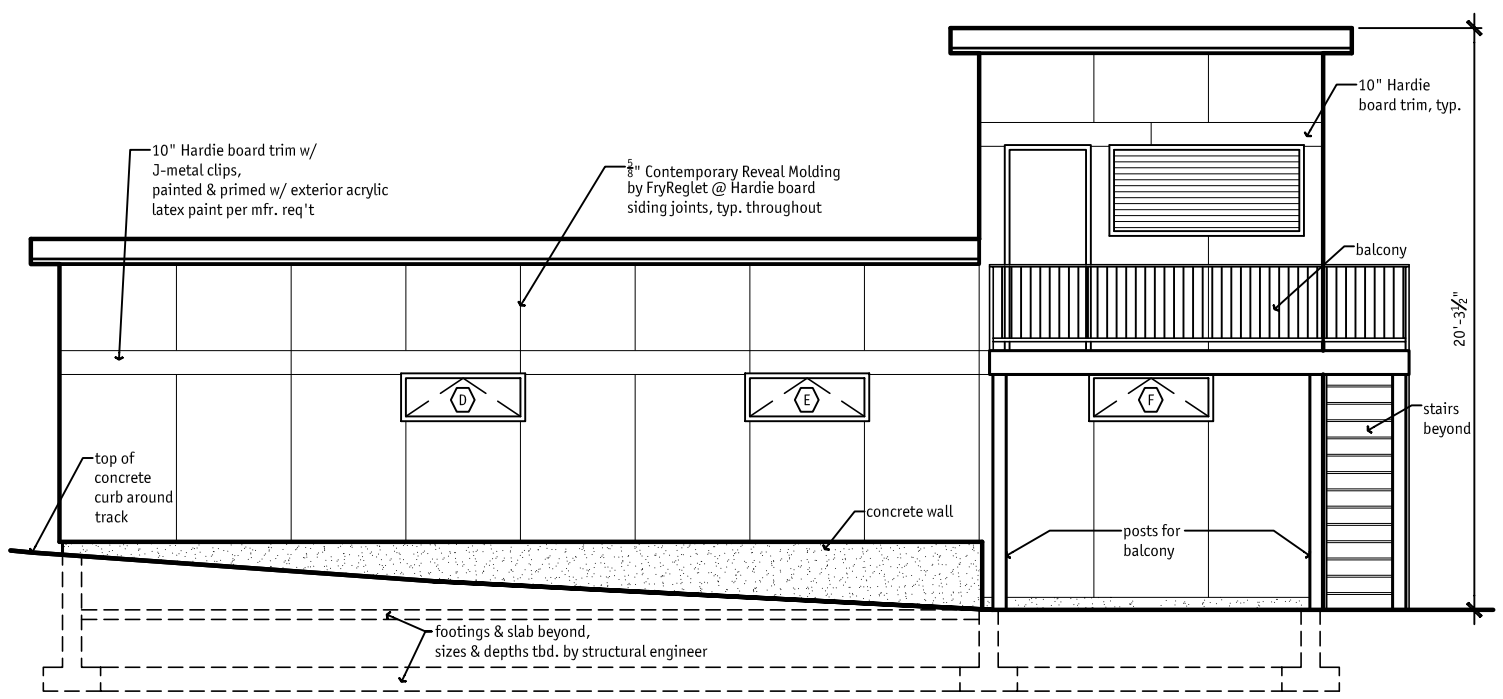

2 east elevation
1/4" = 1'-0"

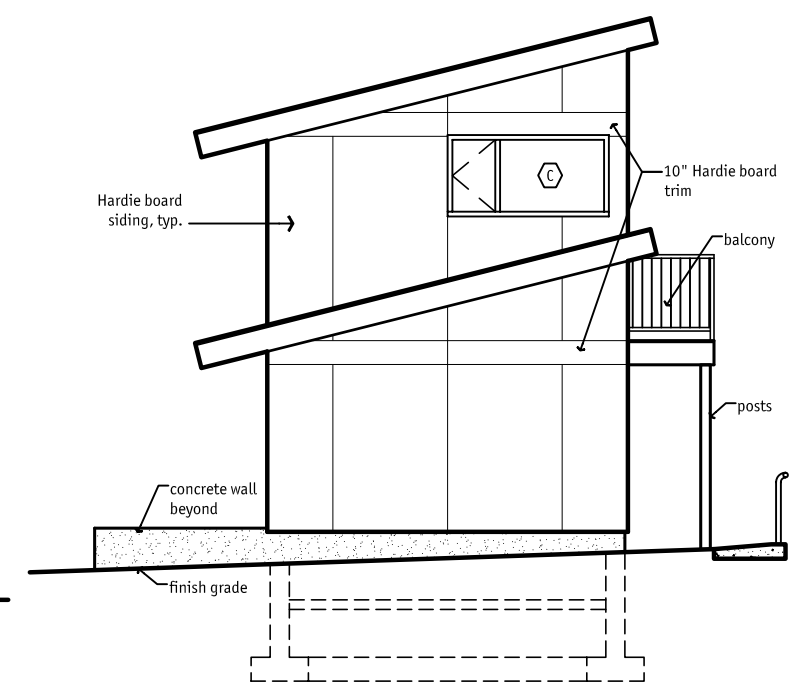

4 south elevation
1/4" = 1'-0"

PLACE architects, plic

Marymoor Velodrome Announcer / Storage Facility
Redmond, WA

Issue:
03.12.04 SD
12.09.04 DD

Project:
0110

Drawn:
hj/tw/et/ms

elevations

A3.1

09 december 2004

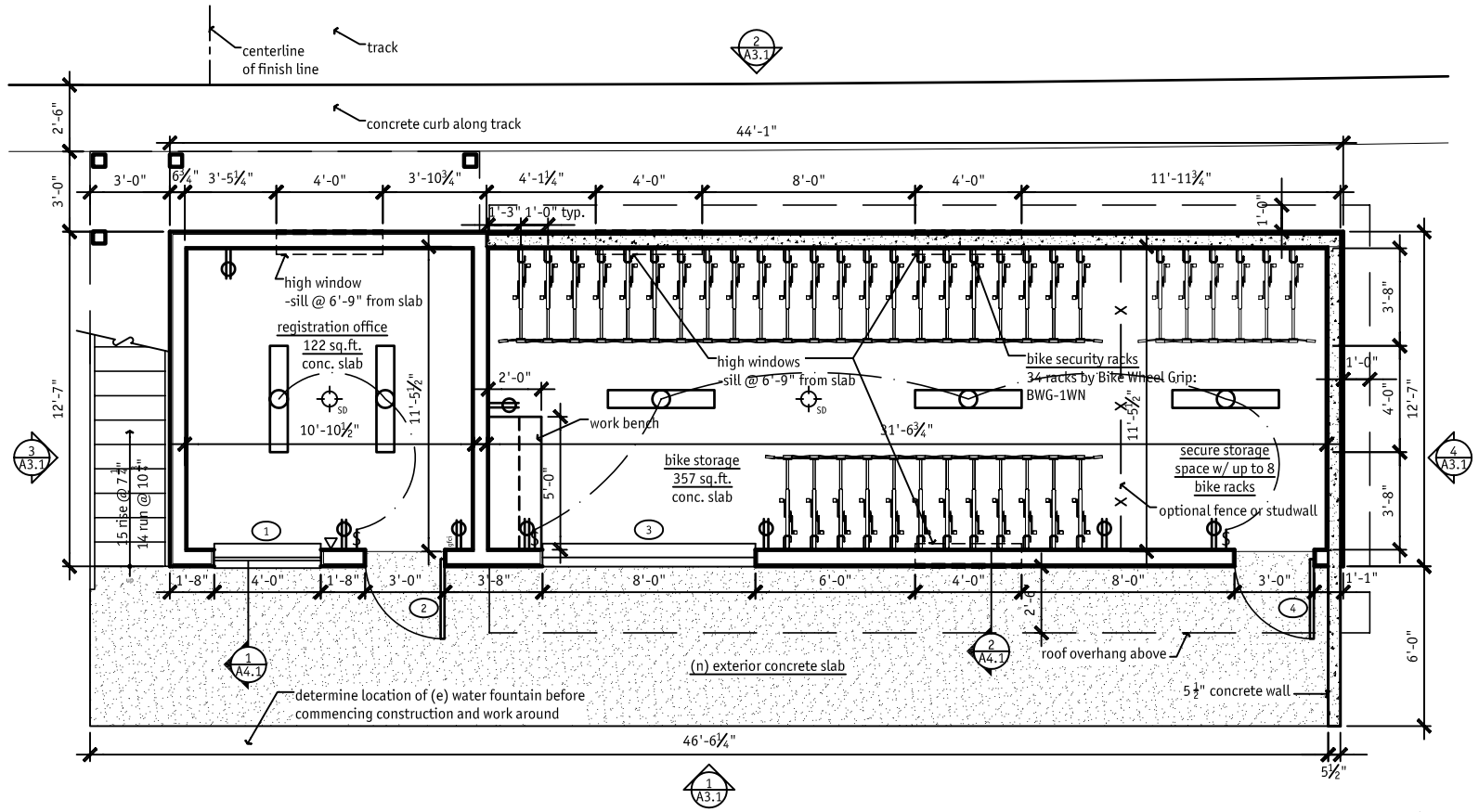

1 first floor plan
1/4" = 1'-0"

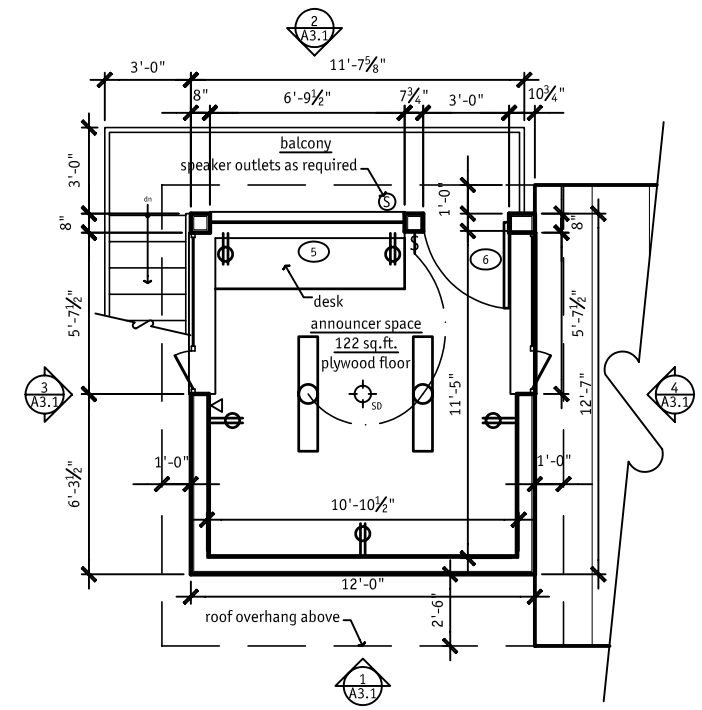

3 second floor plan
1/4" = 1'-0"

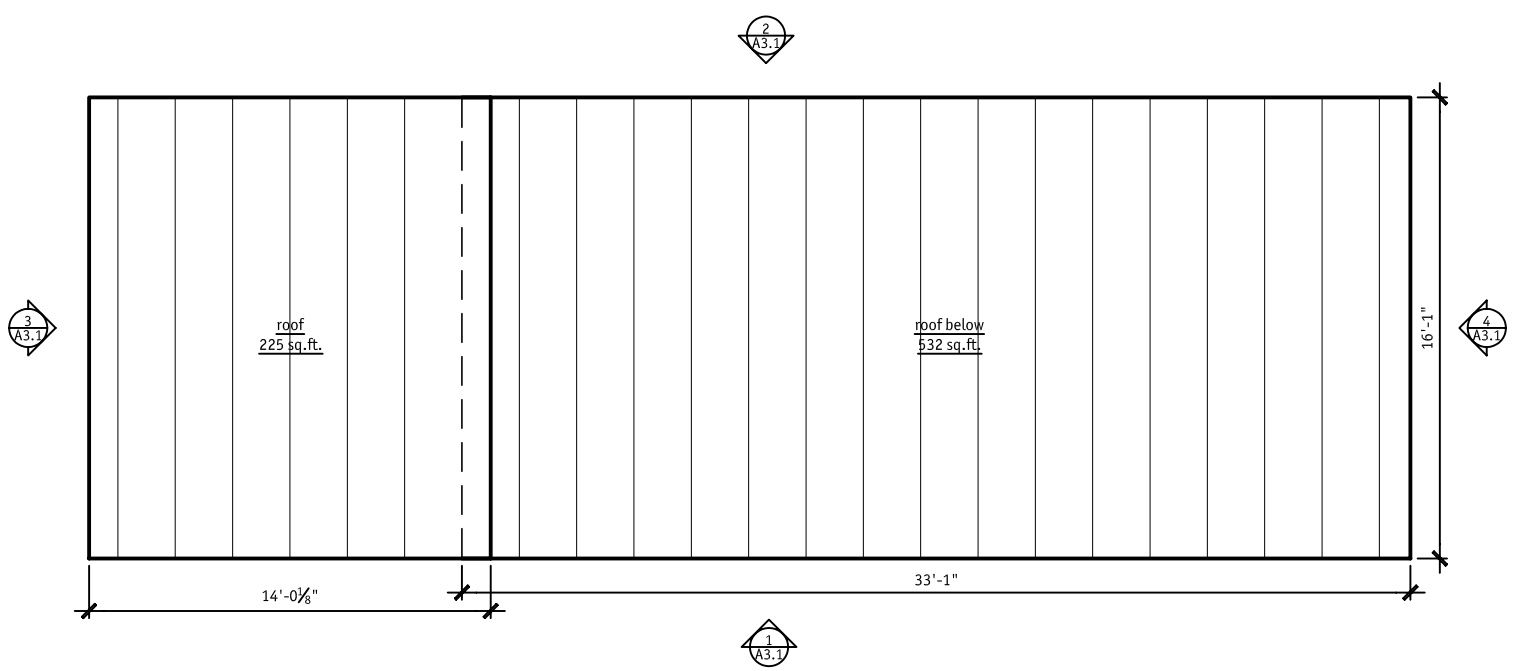

2 roof plan
1/4" = 1'-0"

electrical legend

- 4' compact fluorescent light ceiling mounted
- duplex receptacle
- gfci waterproof ground-fault circuit-interrupter (GFCI)
- SD smoke detector
- telephone jack

PLACE architects, pllc

Marymoor Velodrome Announcer / Storage Facility

Redmond, WA

Issue:
03.12.04 SD
12.09.04 DD

Project:
0110

Drawn:
hj/tw/et/ms

floor plans & roof plan

A2.1

09 december 2004

WINDOW SCHEDULE

TYPE	WINDOW SIZE (R.O.)	WDW UNIT #	WDW TYPE	GLAZING TYPE	HW	QTY	NOTES
A	12'-0" X 1'-6"		A	C		1	3 MULLED UNITS
B	5'-7 1/2" X 3'-0"		C & F	C		1	MULLED
C	5'-7 1/2" X 2'-6"		C & F	C		1	MULLED
D	4'-0" X 1'-6"		A	C		1	
E	4'-0" X 1'-6"		A	C		1	
F	4'-0" X 1'-6"		A	C		1	

TOTAL GLAZING AREA

WINDOW TYPE ABBREVIATIONS:

C CASEMENT F FIXED
A AWNING

GLAZING TYPE ABBREVIATIONS:

C CLEAR

WINDOW NOTES:

1

GENERAL NOTE:

WINDOW SIZE INDICATES ROUGH OPENING SIZE. ALLOW 1/4" SHIM SPACE AT ALL SIDES. CONTRACTOR COORDINATE WITH SUBCONTRACTOR.

DOOR SCHEDULE

DOOR	SIZE	LOCATION	MANUF./MODEL	THICKNESS	MATERIAL	FINISH	HW
1	4'-0" X 4'-0"	REGISTRATION OFFICE	T.B.D.	T.B.D.	WDP	T.B.D.	1
2	3'-0" X 7'-0"	REGISTRATION OFFICE	T.B.D.	PER MFG	HCMT	T.B.D.	1
3	8'-0" X 7'-0"	BIKE STORAGE	T.B.D.	PER MFG	COIL	T.B.D.	1
4	3'-0" X 7'-0"	BIKE STORAGE	T.B.D.	PER MFG	HCMT	T.B.D.	1
5	6'-9 1/2" X 2'-10"	ANNOUNCER SPACE	T.B.D.	PER MFG	COIL	T.B.D.	1
6	3'-0" X 7'-0"	ANNOUNCER SPACE	T.B.D.	PER MFG	HCMT	T.B.D.	1

NOTE: ACTUAL DOOR SIZES ARE LISTED. CONTRACTOR TO VERIFY R.O. SIZES. SIZES OF OVERHEAD DOORS MUST BE CONFIRMED ACCORDING TO DETAILS.

HARDWARE NOTES:

1. STANDARD DOOR HARDWARE: T.B.D.

MATERIAL ABBREVIATIONS:

HCMT HOLLOW CORE METAL
WDP WOOD PANEL
COIL ROLL-UP COIL

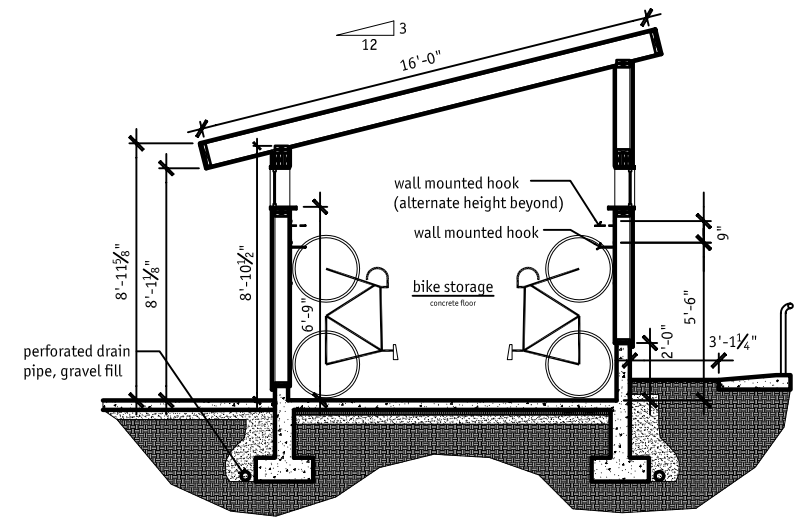

1 section through bike storage
1/4" = 1'-0"

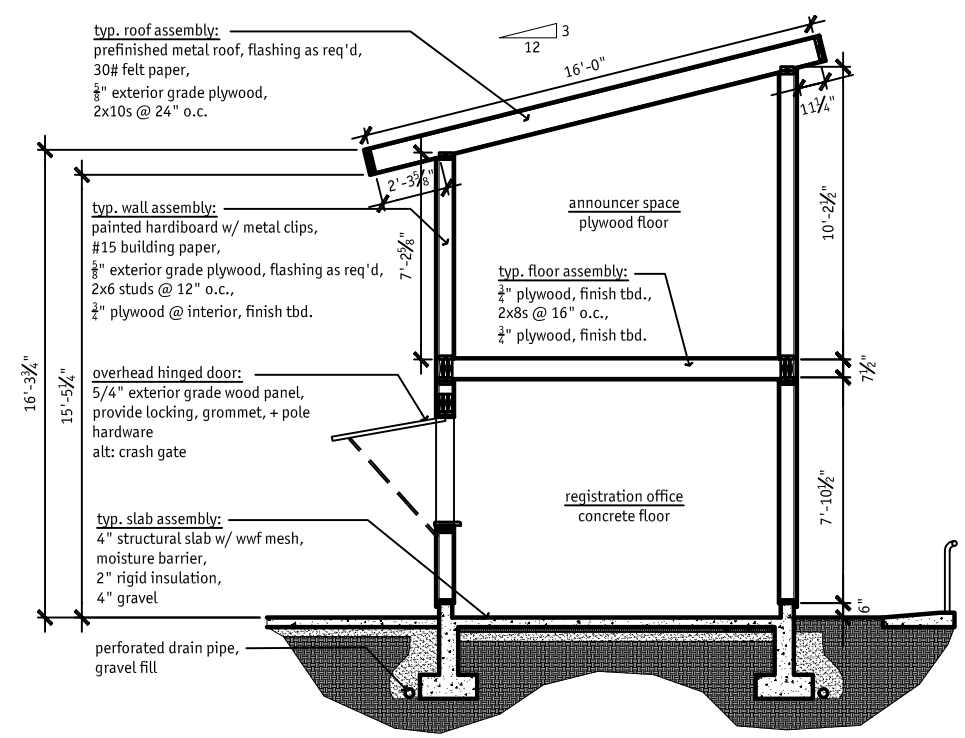

2 section through office & announcer space
1/4" = 1'-0"

PLACE
architects, pllc

Marymoor Velodrome
Announcer / Storage Facility
Redmond, WA

Issue:
03.12.04 SD
12.09.04 DD

Project:
0110

Drawn:
hj/tw/et/ms

sections &
schedules

A4.1

09 december 2004